AUSTIN

SERVICE JOURNAL



CARS

VOLUME 24

FRONT HUB BEARINGS

16-H.P. Taxi and Hire-Car

In order to reduce wear to a minimum, bearings with a pressed steel cage are now being fitted in place of the solid brass cage type. As the old and new bearings are interchangeable, part numbers 6K 442 and 6K 443 remain unchanged. Future replacements will be of the pressed steel cage type.

Commencing Chassis Number:-

16-H.P. Taxi, R.H. Steering	–	153463
16-H.P. Hire-Car, R.H. Steering	–	153579
L.H. Steering	–	153571

FOR YOUR RECORDS	PARTS LISTS
	STOCK CARDS
	PARTS ORDERED
	ALTERATIONS NOTED

Printed in England. April 26, 1954.

FRONT HUBS

A 30

To accurately determine the front hub bearing pre-load and thereby facilitate assembly, the collapsable spring-type distance piece A has been replaced by a non-collapsable cast iron one B—see Fig. 1. The new distance piece is used in conjunction with new hub bearings which are identical in every respect with the old ones, but which have the distance C between the inner and outer races accurately controlled in manufacture, so that the two faces are level within .001″ (.0254 mm.) of each other—see Fig. 2.

When assembling hubs which are fitted with the new cast iron distance piece it is not essential to use a torque wrench for tightening the hub nut as is the case with the older type. The bearing pre-load cannot be altered by extra tightening of the hub nut, which should be fully tightened and secured with the split pin.

INTERCHANGEABILITY

The new hub bearings will be supplied for replacements of the old ones, and the new distance piece, together with the new bearings, may be used to replace the old distance piece and bearings. The new distance piece must not be used with the old bearings.

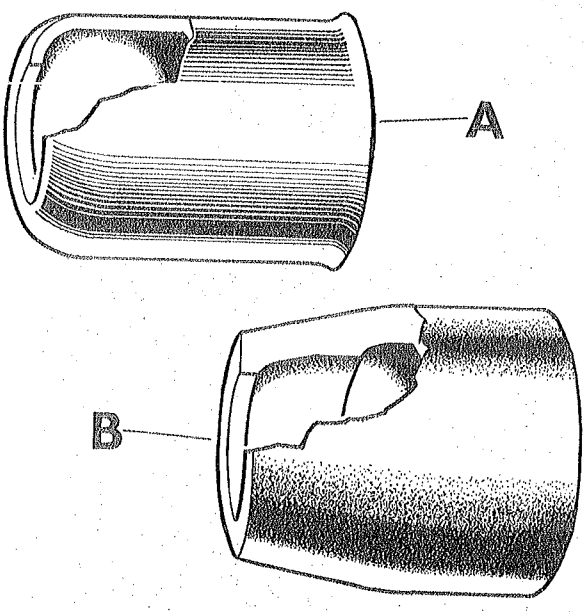

Fig. 1 STR 1390

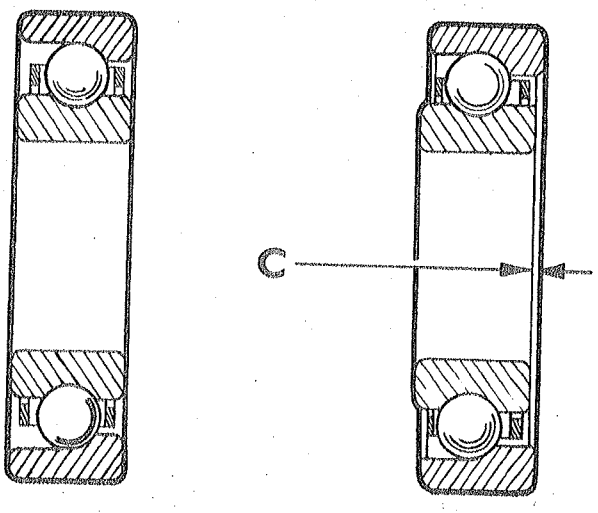

Fig. 2 STR 1391

FOR YOUR RECORDS	PARTS LISTS
	STOCK CARDS
	PARTS ORDERED
	ALTERATIONS NOTED

Continued

Printed in England, May 10, 1954

FRONT HUBS—*continued*

SUMMARY OF ALTERATION

Type	Range	Plate	Description	Number per Vehicle	Austin Part Number	Parts List Publication Number
AS.3	R.H.S. To C.28470 L.H.S. To C.29852					
AS.4	R.H.S. C.25631–40978	FA8	Ball bearings, inner, 25 × 52 × 15 mm. (use 2A 4147) .	2	6K 622	
	L.H.S. C.33906–42285	FA5	Ball bearings, outer, 17 × 47 × 14 mm. (use 2A 4148) .	2	2K 5155	
A2S.4	R.H.S. C.25621–40514	FA6	Distance pieces (use 2A 4146 with 2A 4147 and 2A 4148)	2	2A 4002	Pub. 883B, Front Suspension, p. 2.
	L.H.S. C.30715–40517					
AS.4	R.H.S. C.40979 on L.H.S. C.42286 on	FA8	Ball bearings, inner, 25 × 52 × 15 mm.	2	2A 4147	
A2S.4	R.H.S. C.40515 on L.H.S. C. 40518 on	FA5	Ball bearings, outer, 17 × 47 × 14 mm.	2	2A 4148	
			Distance pieces	2	2A 4146	

FRONT HUB EXTRACTOR ADAPTORS

Austin-Healey 100

The front wheels of the Austin-Healey 100 are fitted to the hubs by means of serrations, being held in position by "knock-on" hub caps. These caps are threaded right and left hand respectively —left hand thread/right hand side of the car, and right hand thread/left hand side: the caps are marked accordingly.

To remove a hub from the swivel axle it is necessary to use an adaptor GT 8G (right hand side) or GT 8H (left hand side), together with the centre screw extension GT 8J (Fig. 1) in conjunction with hub extractor GT 8.

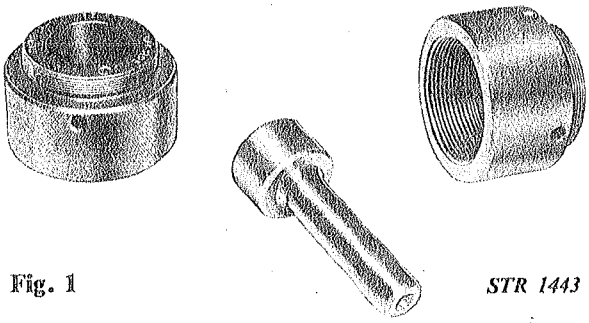

Fig. 1 *STR 1443*

To remove a hub proceed as follows:—Loosen the hub cap by means of blows from a hide or lead hammer, then jack up the car and remove the hub cap and wheel.

Remove the nuts and spring washers holding the brake drum to the hub and remove the brake drum. If the drum appears to bind on the brake shoes, the shoe adjusters should be slackened off until the drum is free.

Remove the press-in dust cap, using the extractor provided in the tool kit. Take out the split pin and, with a suitable box spanner, remove the swivel axle nut together with the special flat washer.

Screw the adaptor, GT 8G or GT 8H, on to the hub. Place the centre screw extension GT 8J into position, with its largest dimension located in the adaptor, and fit GT 8 to the adaptor.

Turning the centre screw in a clockwise direction will produce a perfectly square pull and the hub will be withdrawn (see Fig. 2).

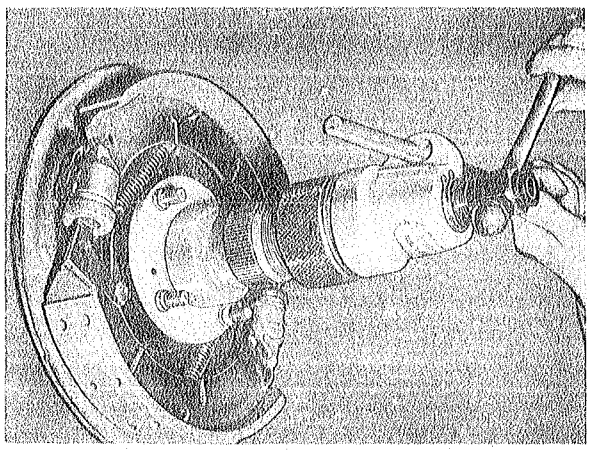

Fig. 2 *STR 1492*

Issue 11 *Printed in England October 25, 1954*

REAR AXLE

DISMANTLING AND ASSEMBLING

A 30

It is strongly advocated that operators make use of the special service tools that are available. These tools have been specially designed to render easy operation and to prevent damage to the parts concerned.

TO REMOVE DIFFERENTIAL SHAFT

Chock all wheels not being operated upon. Jack up the car, lower on to blocks and remove the road wheel.

Using a screwdriver, take out screw or screws securing the brake drum, release handbrake, and tap off brake drum with hide or wooden mallet.

If the brake linings should hold the drum when the handbrake is released, slacken off the brake shoe adjuster a few notches.

Remove, with screwdriver, the screw which holds the differential shaft to the hub and draw out the shaft, taking care that any oil which may be clinging to the shaft does not get on to brake linings (Fig. 1).

Should the shaft be tight, knock on its end with a hide or wooden mallet, then gently prise away from the hub.

TO REFIT DIFFERENTIAL SHAFT

When refitting, the splines will, in all probability have to be "felt" or guided into mesh, generally achieved by slowly rotating the shaft, at the same time pushing inwards. Be certain that the paper joint washer is in position and in good condition. If at all damaged fit a new one. Holes in the joint washer, shaft flange and hub, should be lined up, and the screw securing the shaft to the hub, must be placed in the countersunk hole, or it will not screw up flush with the flange, thus preventing correct fitting of the brake drum.

Finally, fit the brake drum, readjust brakes on both sides and replace the road wheel.

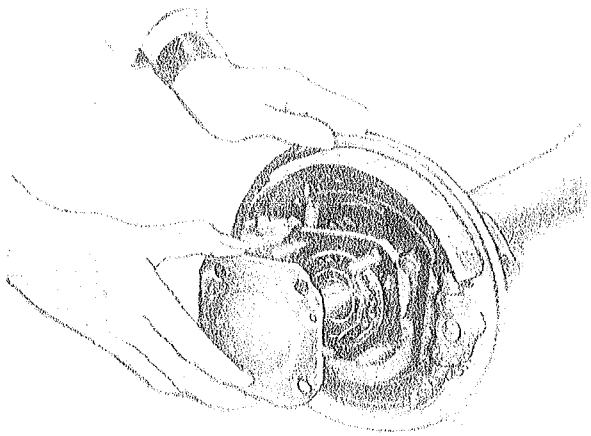

Fig. 1 *STR 1221*

Printed in England. Published January 18 1954

TO REMOVE REAR HUB

Proceed as previously instructed for differential shaft removal, then knock back lockwasher, and with tool GT 152 unscrew the hub retaining nut (Fig. 2).

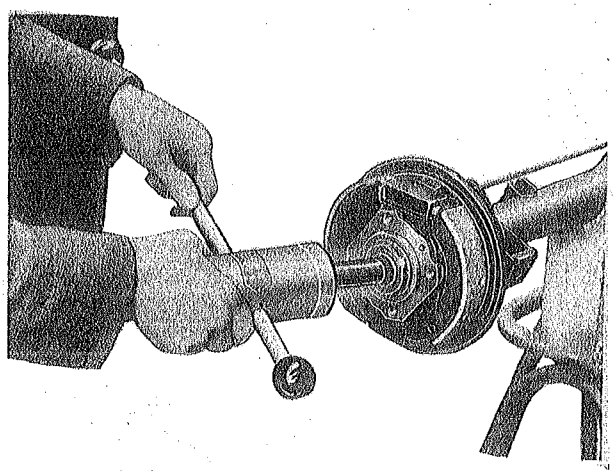

Fig. 2 *STR 1155*

Tilt lockwasher so that the peg disengages with the indentation in the threaded end of the axle casing, and lift away (Fig. 3).

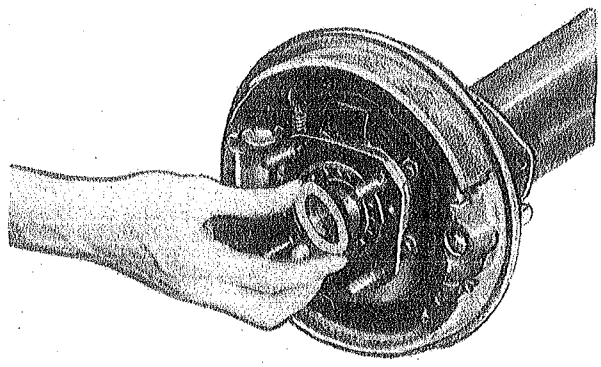

Fig. 3 *STR 1222*

To withdraw the hub, use tool GT 146 making sure that the threaded thrust pad is properly in position. On hubs which are fitted with studs, the tool is held in position by using the road wheel nuts, but on those which utilise setscrews, the special screws supplied with GT 146 must be used.

Making sure that the thrust pad is located squarely in the end of the axle casing, screw in the centre bolt of the tool. As the bolt is tightened, the complete hub assembly will be drawn off (Fig. 4).

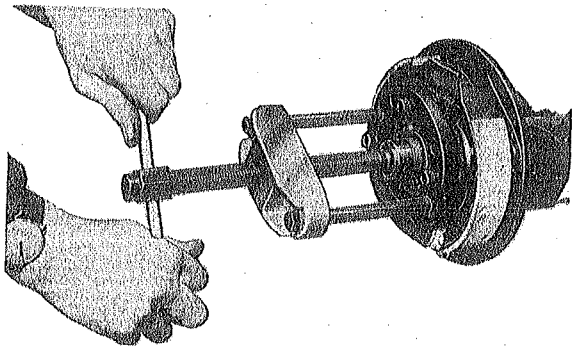

Fig. 4 *STR 966*

TO REFIT REAR HUB

Use tool GT 145 to drive the hub assembly on to the axle casing (Fig. 5) after which a new lockwasher, the peg of which must register in the indentation in the axle casing, should be fitted, followed by the hub nut, which must be fully tightened, using tool GT 152 (Fig. 2).

When the nut has been pulled up dead tight, bend the lockwasher against one of the flats of the nut, thus locking it in position.

The differential shaft, brake drum and road wheel can be assembled as previously described.

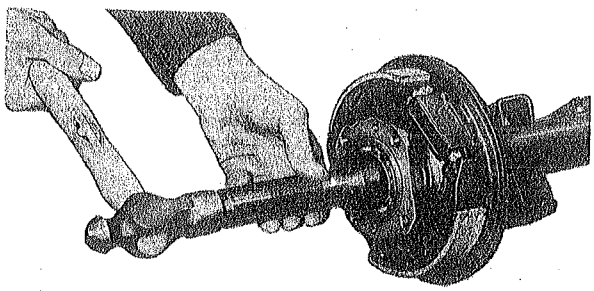

Fig. 5 *STR 957*

If it is required to renew rear hub race, or oil seal, the differential shaft and hub must be removed as already described, then using tool GT 145 the race can be drifted out (Fig. 6), and using tool GT 140 the oil seal can be removed (Fig. 7).

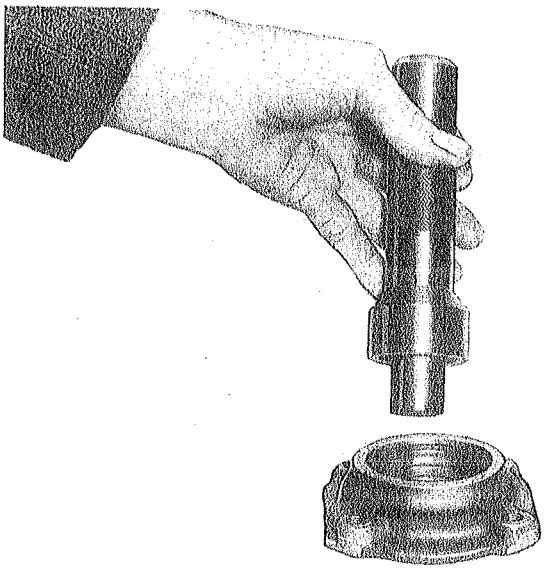

Fig. 6 *STR 958*

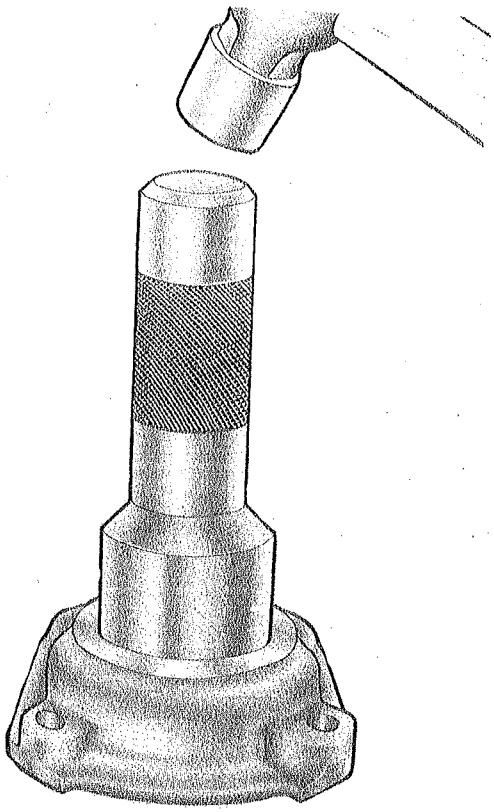

Fig. 7 *STR 1231*

When fitting a new oil seal, be quite sure that it is fitted with its lip towards the bearing, and that it is drifted into position by using tool GT 14 (Figs. 8 and 9).

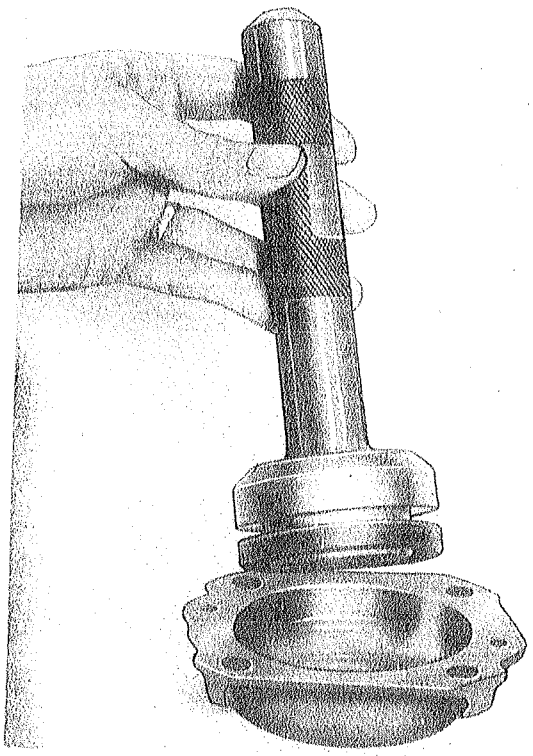

Fig. 8 *STR 969*

The bearing can now be fitted, using tool GT 4 (Fig. 10), after which the procedure already described for replacing the hub, can be carried out.

On early models, when the bearing is right home in the hub housing, the face of the outer race protrudes from the hub—this ensures that the bearing is definitely gripped between the abutment shoulder in the hub and the flange of

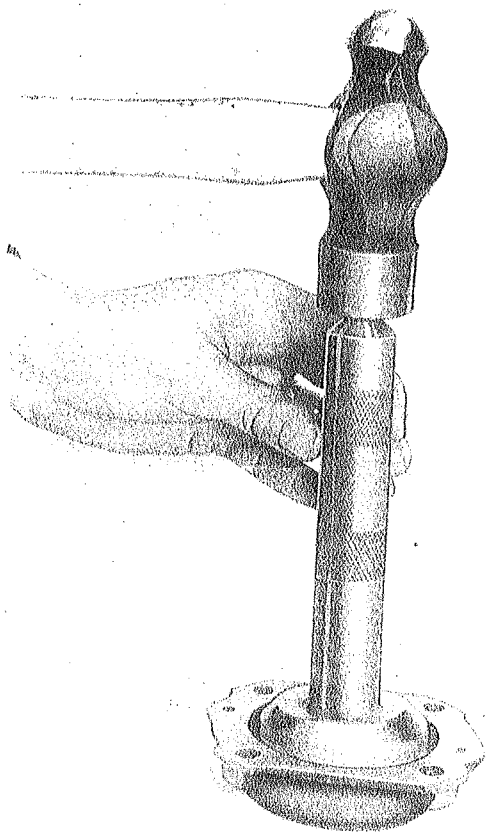

Fig. 9 *STR 970*

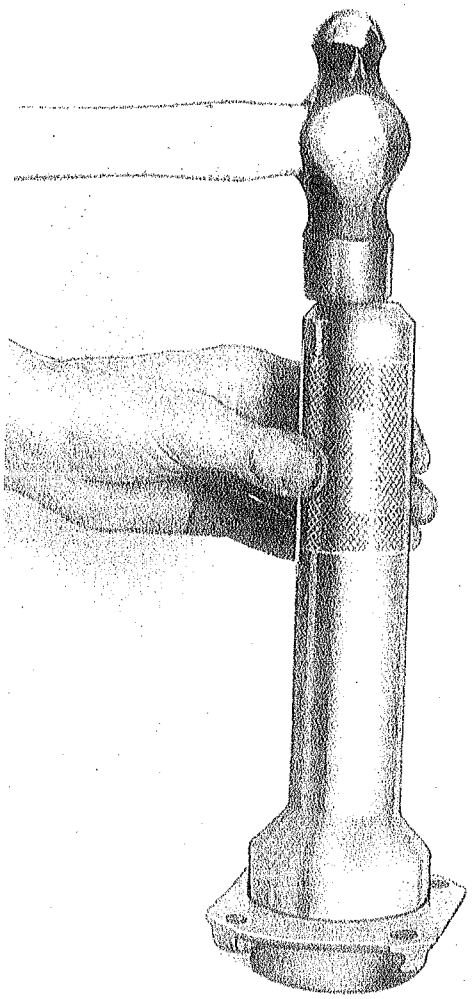

Fig. 10 *STR 960*

the differential shaft. With later type hubs this is not so, the outer race fitting flush to the hub.

Make sure that during assembly, the bearing is packed with lubricant of the recommended grade.

TO REMOVE AND REFIT THE GEAR CARRIER ASSEMBLY

Before any renewals or servicing can be carried out to crown wheel, pinion, pinion bearings or differential unit, it is necessary to remove the gear carrier from the axle casing.

It will be helpful, if (after jacking up and removing both road wheels) arrangements are made to drain the oil from the axle casing, leaving it to drain whilst other operations are carried out.

The gear carrier can be removed with the rear axle in position, but it is necessary to partially withdraw the differential shafts (as already described) and to disconnect the propeller shaft from the bevel pinion flange, after which the complete shaft can be withdrawn from the gearbox mainshaft sliding joint and placed on one side out of the operator's way.

It may be found, that it is more convenient to remove the bevel pinion flange at this stage, using wrench No. GT 142 to prevent the flange from turning, whilst the nut, after knocking back lockwasher, used on early models is undone with a close-fitting box spanner (Fig. 11). The flange may now be drawn off by the use of tool GT 2.

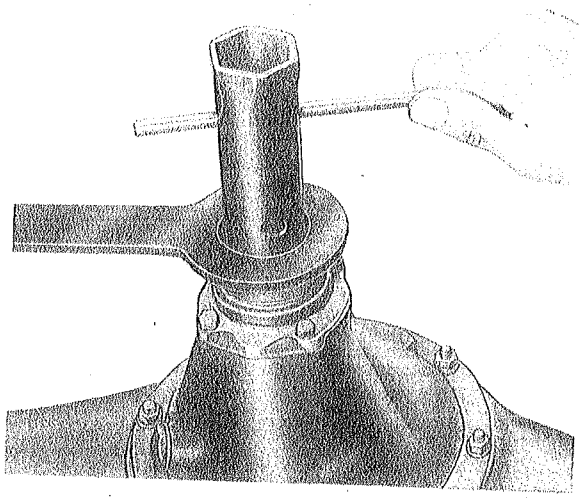

Fig. 11 *STR 968*

On earlier models, the removal of four setscrews, together with spring washers, will enable the operator to take off the front end cover containing the oil seal (Fig. 12). The joint washer can then be removed.

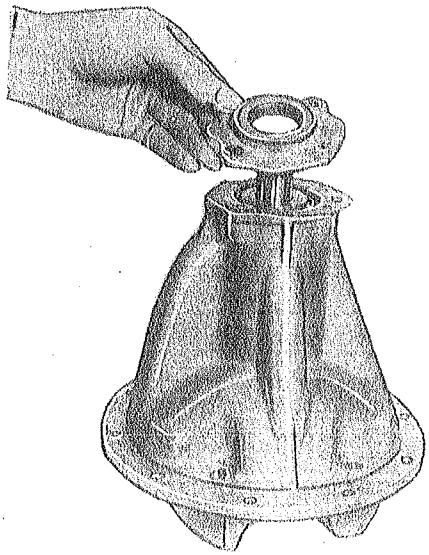

Fig. 12 *STR 1225*

If the eight nuts and spring washers, securing the gear carrier to the axle casing are taken off, the unit can be lifted out (Fig. 13). Should it be tight in the casing, a few blows with a hide or wooden mallet will release it. Remove the joint washer, and fit a new one on re-assembly.

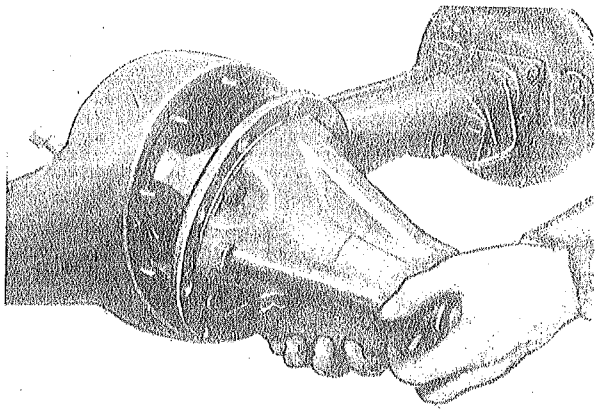

Fig. 13 *STR 1226*

DISMANTLING AND ASSEMBLING OF DIFFERENTIAL

With the gear carrier assembly firmly supported, any servicing to crown wheel, bevel pinion and differential gear can now be carried out.

To remove the differential assembly from the carrier (and this must be done before the bevel pinion can be taken out) take off the four nuts, together with spring and flat washers, and lift off the bearing caps. Take particular notice of the markings on caps and housing, for as these are machined in pairs, it is essential that they are replaced on their respective sides on re-assembly. The differential assembly can now be gently prised out, bringing with it the bearings.

TO REMOVE DIFFERENTIAL BEARINGS

The removal of the differential bearings is a straight-forward operation if tool GT 47A is used in conjunction with the special adaptors GT 172. The thrust pad supplied with the adaptors is fitted into the centre of the differential case and the four segments (or adaptors) are fitted with their inner lips under the race, with their outer contoured edges locating in the tapered frame of GT 47A (Fig. 14).

When the centre bolt is tightened on to the thrust pad the tool will centralize itself, and further pressure on the screw will draw the bearing off the differential case.

Watch carefully for shims, which will be found behind the bearings, so that they may be fitted in their original positions on re-assembly. These shims determine the amount of backlash between crown wheel and pinion.

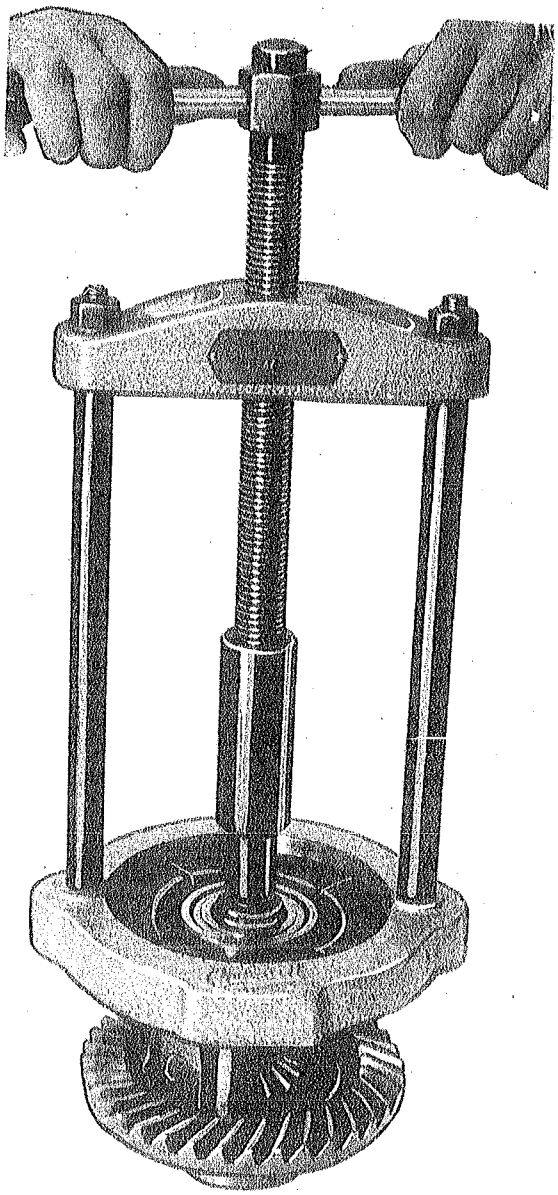

Fig. 14 *STR 1152*

TO REFIT DIFFERENTIAL BEARINGS

Tool GT 145 has been specially designed to make the fitting of differential bearings a very simple matter (Fig. 15). The projecting end of the tool locates in the differential case thus ensuring the

squareness of the bearing whilst it is being driven into position. The larger rim of the tool coincides with the inner race diameter, and prevents damage to the race during fitting. Shims removed during dismantling must be fitted to their respective sides before fitting the bearings, and notice must be taken that each bearing is marked "Thrust" on one side and it is important that this marking be facing outwards, towards the hubs, in each case.

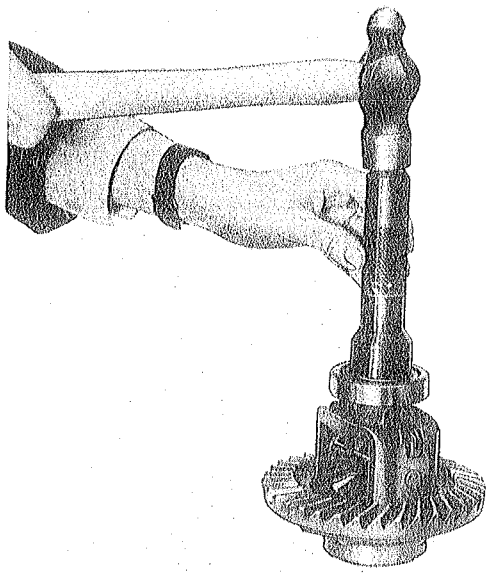

Fig. 15 *STR 959*

TO REMOVE THE CROWN WHEEL

First undo the lockwashers (fitting new ones upon re-assembly), then unscrew the nuts and lift the crown wheel free of the differential case.

TO REFIT CROWN WHEEL (OR FIT A NEW ONE)

After making sure that all surfaces are perfectly clean and free from particles of grit, fit the wheel, together with lockwasher, and fully tighten all nuts, pulling up the nuts by diametrical selection, but do not, at this stage, turn over the lockwashers.

Now carry out a check for crown wheel alignment, it is essential that it runs true in its bearings to within .002" (.058 mm.).

To do this, mount the differential case, complete with bearings, on vee blocks, and using a dial indicator, take readings on the face of the crown wheel.

If the irregularity is greater than the measurement already mentioned (.002") the crown wheel must be removed, and the cause found. This is generally attributed to dirt between the faces, for a crown wheel will rarely run out of true, if the two surfaces have been thoroughly cleaned.

When the desired true running is obtained, turn over the tabs of the lockwashers.

REMOVAL OF DIFFERENTIAL WHEELS AND PINIONS

The differential case is of one piece construction. The differential wheels and pinions can be removed as follows:—

Tap out the peg securing the pinion shaft. Extract the shaft and remove wheels, pinions and thrust washers. Wash all components in clean paraffin, and as the unit is now completely dismantled all parts can be carefully examined for signs of wear.

TO RE-ASSEMBLE DIFFERENTIAL GEAR UNIT

Replace the differential wheels in the housing and place the pinions in position, together with their thrust washers, push home the pinion shaft

making sure that the holes in shaft and housing line up, so allowing the securing peg to be driven in. This peg, when fitted, should have the rim peened over, thus ensuring that it does not work loose due to vibration.

TO REMOVE AND REFIT THE BEVEL PINION

With the crown wheel and differential unit removed from the gear carrier, the bevel pinion can be driven out rearwards, using a soft metal drift.

The pinion, on being driven out, will take with it the inner race and rollers of the rear bearing, the distance piece and the shims.

The inner race and rollers of the front bearing can now be drifted out, taking with it the oil seal (which should be renewed on re-assembly). On earlier axles the oil seal was fitted in a separate housing: details of removal and replacement will be found on page 5.

The outer races can be withdrawn from the housing by using tool GT 166, drawing the front race forwards, and the rear race backwards.

TO REMOVE AND REFIT BEVEL PINION BEARING OUTER RACES

With the gear carrier firmly held, the rear bearing outer race is removed first (Fig. 16).

Place the distance pieces F in position over the studs of the carrier, and mount the body A of tool GT 166 so that the centre screw B is central in the carrier, and place the two halves of the large adaptor (code 2) H inside the outer race J and round the centre screw B so that the flanges fit under the lower edge of the outer race J. Hold the tommy bar of the centre screw B (to prevent it turning) and screw down the wing nut C until the two halves of the adaptor H engage with the cone D at the end of the centre screw B. Furthe operation of the wing nut C will draw the outer race squarely from the gear carrier.

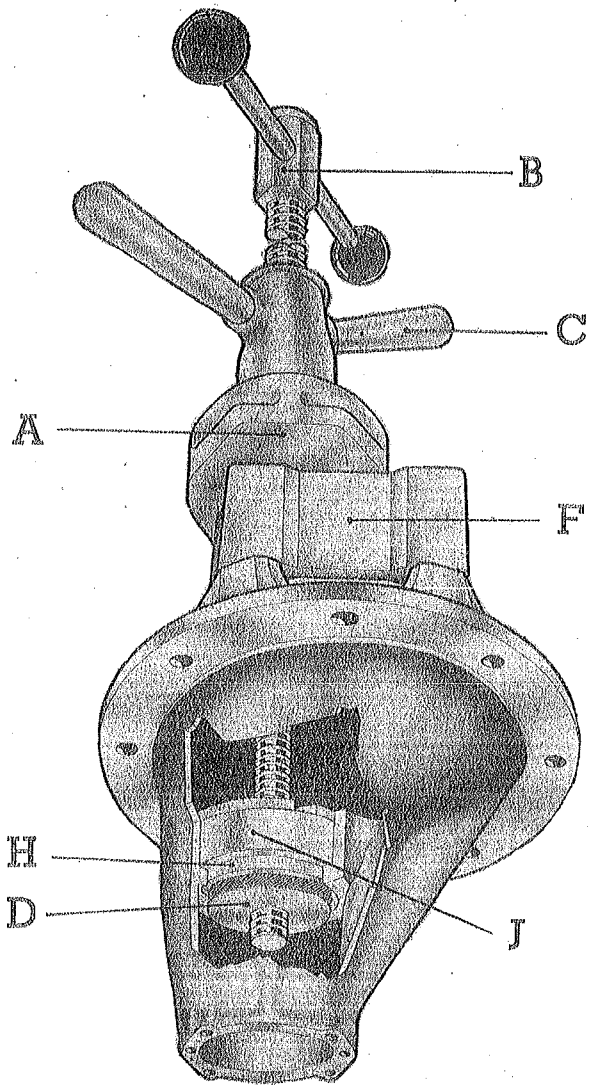

Fig. 16 STR 1148

To remove the front bearing outer race K, insert the tool from the front of the carrier, and

using the two halves of adaptor (code 1) G proceed as before, and the front bearing outer race K will be removed without damage (Fig. 17).

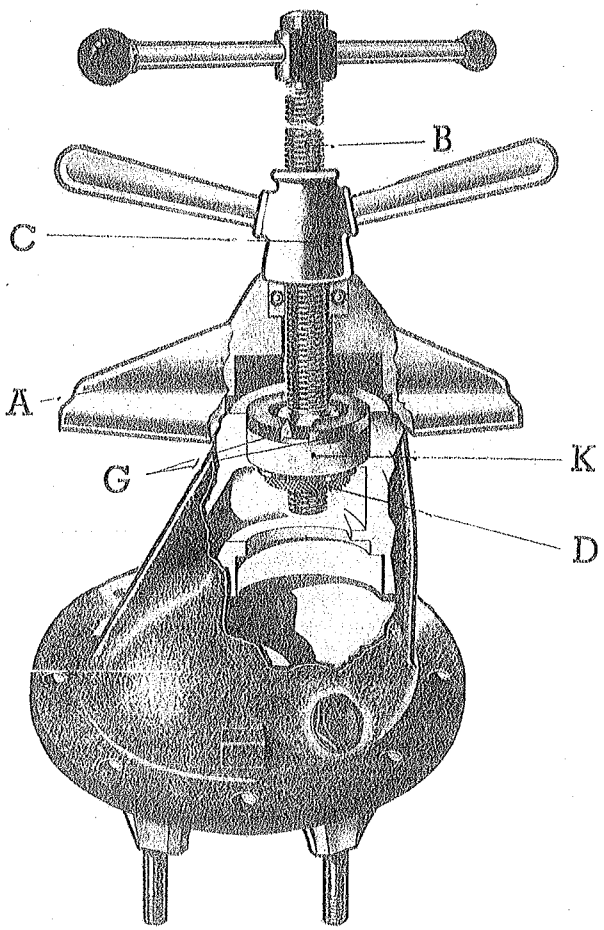

Fig. 17 *STR 1149*

To fit new bearing outer races, the same tool and adaptors can be used, fitting the rear outer race first. Fit the adaptor ring (code 3) I in the front end of the carrier and mount the tool body centrally, with the centre screw B passing through the adaptor ring I. Place the outer race L (small diameter uppermost) over the cone D and fit the two halves of the adaptor (code 2) H inside the race. Lift up centre screw B, to bring adaptor into contact with the cone D, then operate the wing nut C to draw race squarely into position (Fig. 18).

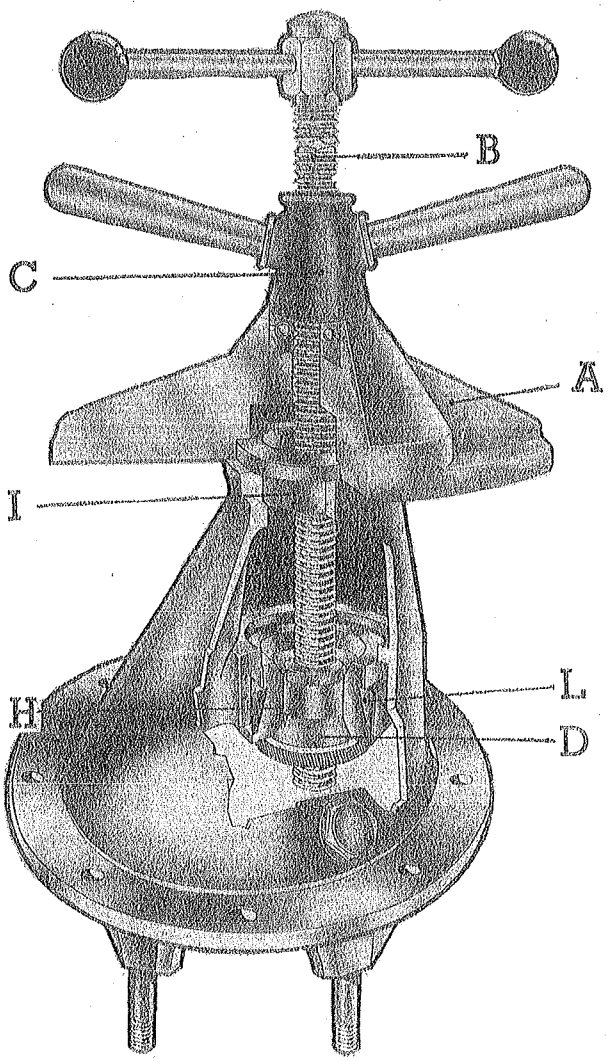

Fig. 18 *STR 1151*

To fit the front bearing outer race, remove the adaptor ring (code 3) I just used for the rear bearing outer race, and then remove the cone D from the centre screw B of the tool and fit the extension screw E, replacing the cone D on the extension E. Fit the distance pieces F on to the studs at the rear of carrier and mount the tool centrally with the centre screw B projecting from the front end of the casing.

Pass the outer race over the cone D (small diameter uppermost) and fit the two halves of the adaptor (code 1) G inside the race.

Lift the centre screw B upwards to bring the adaptor G into contact with the cone D, hold the

centre screw B to prevent turning, and operate the wing nut C. This will draw the outer race K squarely and firmly into position in the carrier (Fig. 19).

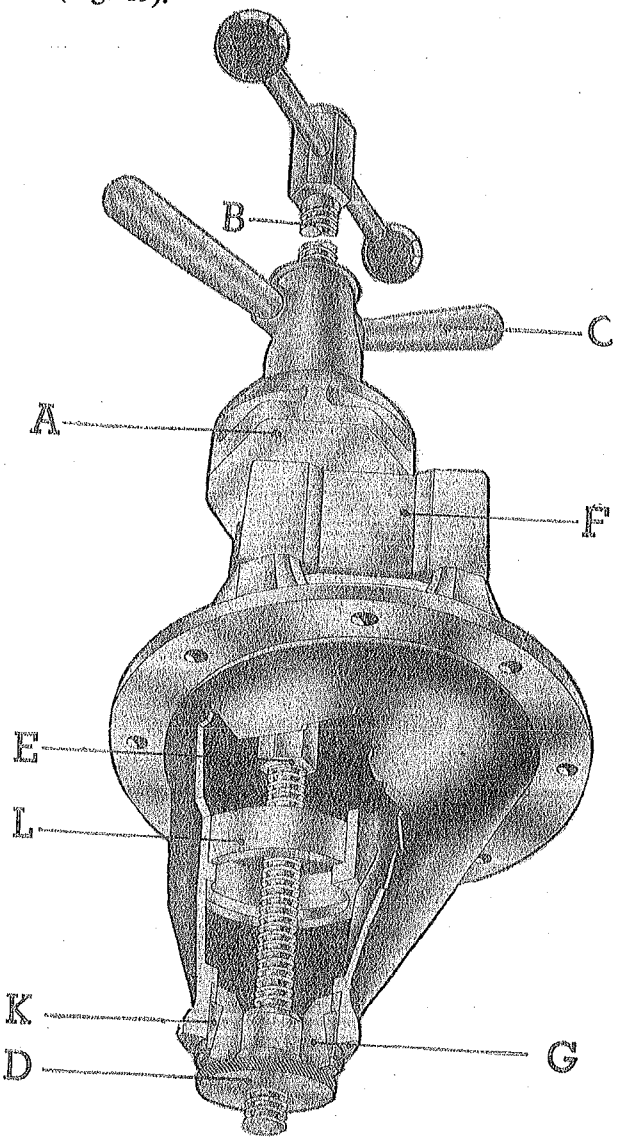

Fig. 19 *STR 1150*

TO REMOVE AND REFIT BEVEL PINION REAR BEARING INNER RACE

To remove the rear bearing inner race and rollers from the bevel pinion shaft, use tool GT 143, in conjunction with GT 12 (Fig. 20).

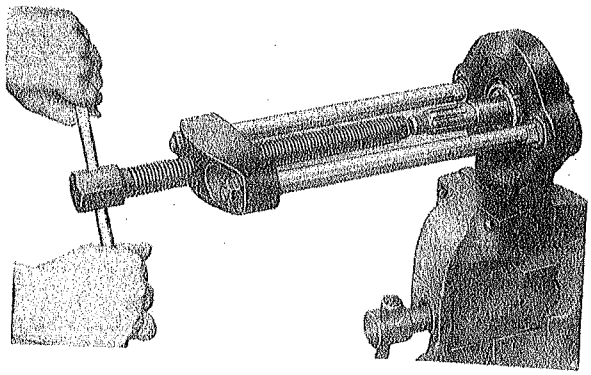

Fig. 20 *STR 963*

The split adaptor ring should be placed in the frame of the tool and round the bearing on the pinion shaft. The centre screw can then be rotated by means of the tommy bar to push the pinion through the bearing.

GT 12 with a plain adaptor ring can also be used to refit the bearing to the shaft. To do this place the tool and the plain adaptor ring on top. Pass the bearing on to the shaft so that the shaft passes through the tool and the bearing rests against the plain adaptor ring. Tighten the centre screw on to the pinion, which will then be pressed squarely through the race (Fig. 21).

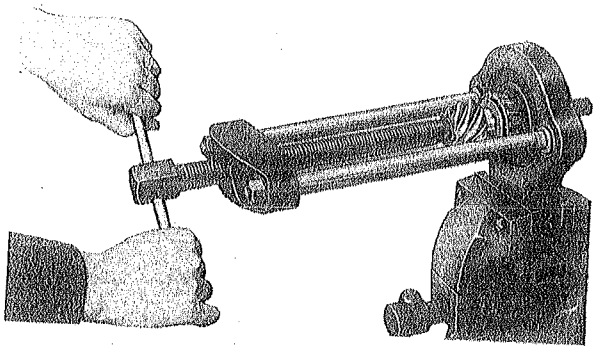

Fig. 21 *STR 964*

TO FIT A NEW CROWN WHEEL AND BEVEL PINION

It should here be noted, that if a crown wheel or bevel pinion should be found damaged it is essential that a new *pair* be fitted, as during

manufacture each crown wheel is carefully lapped in with its corresponding bevel pinion on a special running-in or gear mating machine. After removal from this machine the two gears are carefully marked as a pair, and they should never be separated and re-assembled individually on different axles.

Fit the crown wheel to the differential case as already described, then, after fitting rear bearing to bevel pinion shaft, the outer races to the carrier housing should be fitted, using tool GT 166 as previously described. It must be remembered that both pinion shaft bearings are of the taper roller variety, and that each outer race forms part of a cone, whose base is away from the distance piece between the bearings. Therefore, when fitting, make sure that the larger inside diameter of each outer race is away from the distance piece.

Having fitted the rear inner race, distance piece and shims to bevel pinion shaft, it can now be fitted from the rear of the housing, and being held into place with one hand, the front inner race and rollers may be placed into position from the front. Do not, at this stage fit the oil seal, as it is first necessary to pre-load the bearings to 3–4 in./lb. (.0346–.0456 mkg) excluding the oil seal. Adjustment is effected by the insertion of shims .003″ (.0762 mm.) and .005″ (.1270 mm.) between the pinion distance piece and the inner race of the front bearing, to reduce or increase the degree of preloading till finally a drag of 3–4 in./lb. (.0346–.0456 mkg) is obtained.

A convenient method of checking this pre-loading is by mounting a 4″ (10.16 cm) diameter drum or pulley to the pinion propeller shaft flange (Fig. 22).

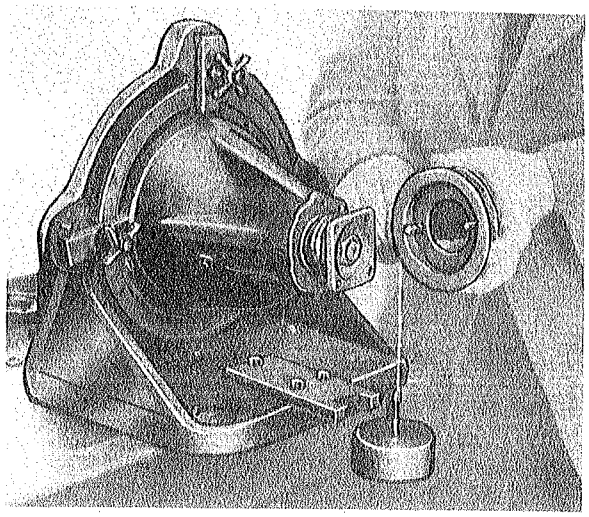

Fig. 22 *STR 1227*

Then when a 1½ lb. (.6804 kg) weight is hung by a piece of cord from the circumference of the pulley (Fig. 23) the preloading on the pinion bearings should be just sufficient to prevent the pinion, and therefore, the pulley, from turning. When a 2 lb. (.907 kg) weight is used the pulley should turn under the load. The bearings will now have a preload of 3–4 in./lb. (.0346–.0456 mkg).

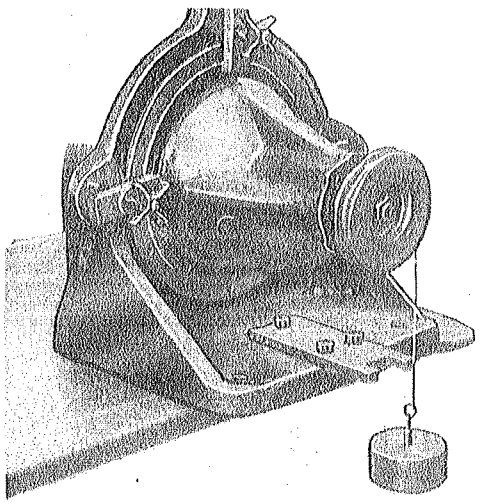

Fig. 23 *STR 1228*

It is, of course, necessary to have the pinion flange fitted and the nut fully tightened to a torque wrench reading of 150. lb./ft. (20.74 kgm.) whilst carrying out this adjustment.

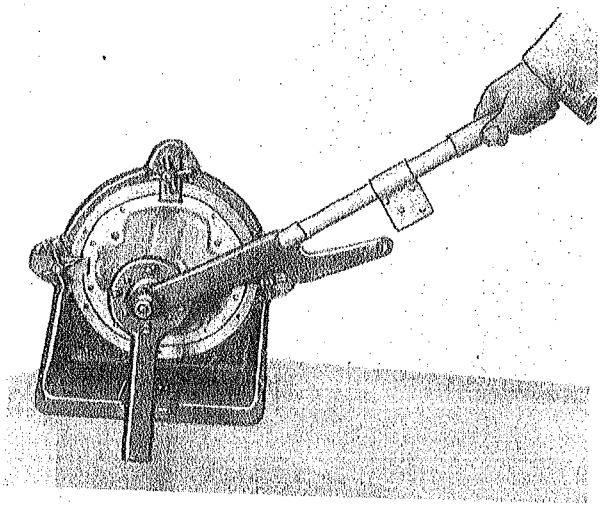

Fig. 24 *STR 1229*

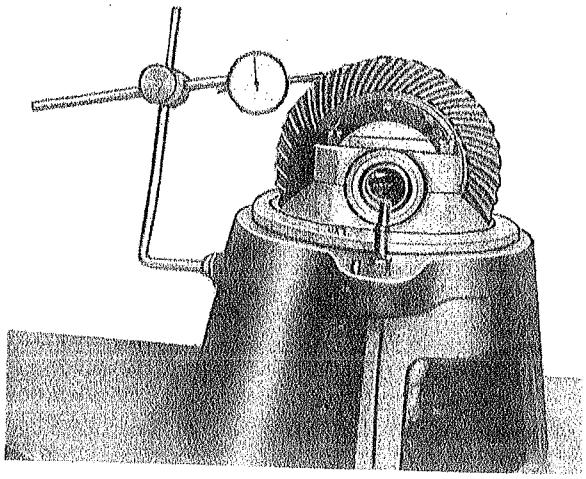

Fig. 25 *STR 1230*

When the preload is satisfactory, the flange can be drawn off and the new oil seal fitted, flange refitted, and the nut finally pulled up to the above-mentioned torque wrench reading.

The crown wheel and differential assembly may now be fitted to the housing and the backlash between crown wheel and pinion checked (Fig. 25). This should be between .008″ (.2032 mm.) and .010″ (.2540 mm.) but the correct figure for each set of gears will be found etched on the back of the crown wheel. Measure the backlash when the gears are secured in the carrier, by using a dial gauge to register against the crown wheel teeth while the pinion is firmly held. If the backlash is found to be too great or too little, adjustment may be effected by moving the shim, or shims positioned between the differential case and the differential bearings, from one side of the crown wheel to the other as required.

When the correct amount of backlash is attained, the complete gear carrier can be fitted to the rear axle casing, using a new joint washer.

Fit the drain plug, and fill the axle to the correct level with the recommended lubricant.

RENEWAL OF BEVEL PINION OIL SEAL

This may be effected with the axle in position, by disconnecting the propeller shaft, drawing off the pinion flange and hooking out the defective seal. A new oil seal should be carefully drifted into place (with its tongue pointing inwards) after which the flange may be replaced (the nut tightened to a torque wrench reading of 150 lb./ft. (20.74 kgm.)) together with the propeller shaft. New lockwashers should be fitted to the propeller shaft flange bolts, and turned over after the nuts have been tightened.

CROWN WHEEL AND PINION

A 30

A new crown wheel and pinion is now being fitted to still further improve the petrol consumption. The new crown wheel and pinion has a ratio of 8/39 in place of 8/41 tooth ratio.

INTERCHANGEABILITY

The new gear carrier assembly can be used for replacements on all A 30 cars. The new crown wheel and pinion alone can be used only for replacements of the crown wheel and pinion, part number C4-100, fitted to the gear carrier assembly part number 2A 7180.

SUMMARY OF ALTERATION

Type	Range	Description	Number per Vehicle	Austin Part Number	Parts List Publication Number
AS.3 AS.4 A2S.4	R.H.S. C.15779–28470 L.H.S. C.15786–29852 R.H.S. C.25631–43897 L.H.S. C.33906–43430 R.H.S. C.25621–43848 L.H.S. C.30715–43420	Gear Carrier with differential case and gears (use 2A 7225)	1	2A 7180	Pub. 883B, Rear Axle, page 1
AS.4 A2S.4	R.H.S. C.43898 on L.H.S. C.43431 on R.H.S. C.43849 on L.H.S. C.43421 on	Gear Carrier with differential case and gears	1	2A 7225	
AS.3 AS.4 A2S.4	R.H.S. C.15779–28470 L.H.S. C.15786–29852 R.H.S. C.25631–43897 L.H.S. C.33906–43430 R.H.S. C.25621–43848 L.H.S. C.30715–43420	Crown Wheel (41 teeth) and Bevel Pinion (8 teeth) use C4-110	1	C4-100	Pub. 883B, Rear Axle, page 2
AS.4 A2S.4	R.H.S. C.43898 on L.H.S. C.43431 on R.H.S. C.43849 on L.H.S. C.43421 on	Crown Wheel (39 teeth) and Bevel Pinion (8 teeth) .	1	C4-110	

FOR YOUR RECORDS	PARTS LISTS
	STOCK CARDS
	PARTS ORDERED
	ALTERATIONS NOTED

Printed in England, March 29, 1954

DIFFERENTIAL SHAFTS

A 40

Differential shafts for all A 40 vehicles are now being manufactured from a higher grade of steel, having a greater tensile strength, to reduce the possibility of breakage under arduous usage.

The part numbers of the various shafts remain unchanged.

DIFFERENTIAL SHAFTS

A 70 Pick-Up

It was stated in the article appearing in this Journal, Volume 23, section "Axle—Rear," page 7, that the differential shafts made of better grade steel having a higher tensile strength, could be readily identified by a small indentation, on a ground flat 8" (203·2 mm.) from the splined portion of the shaft. This small indentation about $\frac{1}{8}$" diameter has now been omitted, but there need be no doubt that all shafts, part number 1B 7268, supplied since the publication of the article already referred to, have been manufactured from the better grade of steel.

PRE-LOADING BEVEL PINION BEARINGS

A30, A40, A50, A70, A90, Austin-Healey 100, A125 and A135

To obtain satisfactory service from a rear axle, it is essential when carrying out an overhaul, to correctly pre-load the bevel pinion bearings.

This pre-loading is achieved by fitting shims between the front bearing inner race and the bevel pinion distance piece.

Pre-loading must be carried out before the oil seal is fitted, but with the bevel pinion flange in position and the nut fully tightened to the appropriate torque wrench reading. These figures will be found in the Service manuals. In the case of the A 125 and A 135 recommended torque figures will be found in this Journal, Volume 22, Section "Axle Rear", page 18.

To check the pre-load use Tool 18G 207, Fig. 1.

The movable arms of the tool are located in opposite holes of the bevel pinion flange and are held in position by means of the knurled nuts, Fig. 2.

The weight is moved along the rod to the required poundage mark, then if the pre-load is correct, the flange will slowly rotate.

If the flange turns easily, a shim, or shims, should be removed, but if too stiff, extra shims should be added.

When the pre-load is correct, the bevel pinion flange should be removed, the oil seal fitted and the flange replaced.

Tightening the flange nut to the appropriate torque wrench reading completes the operation.

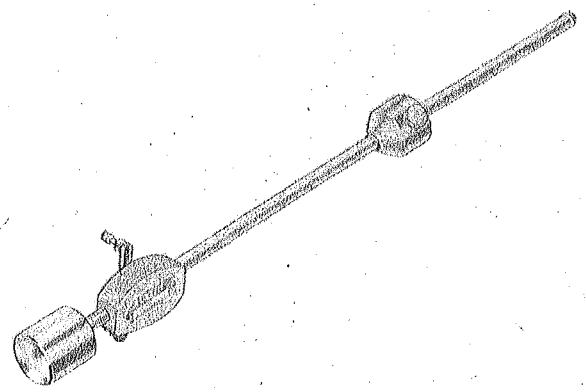

Fig. 1 STR 1518

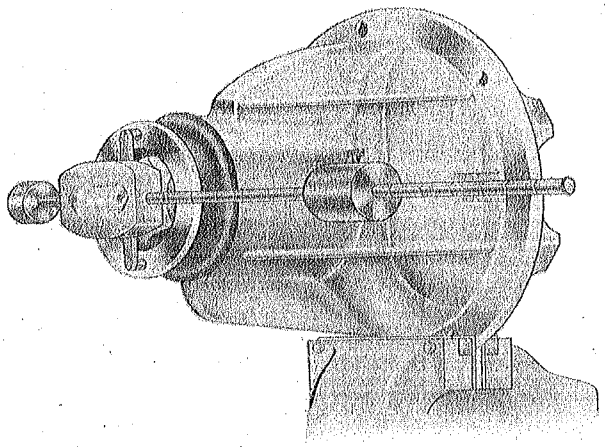

Fig. 2 STR 1519

Printed in England December 13, 1954

DRIVING MIRROR

A 30, A 40, A 70

An interior driving mirror, having a framed glass, has been introduced as an alternative to the frameless type. Mirrors less bracket can be obtained and are interchangeable because the bracket is common to both framed and frameless mirrors.

For A 30 part number details see A 30 Supplement 1, Publication 883B/1.

SUMMARY OF ALTERATION

Description	Number Off	Old Part	New Part	Type and Parts List Publication Number
Driving Mirror (frameless) less bracket	1	*1G 3747	—	A 40 Saloon Pub. 884, p. 90
Driving Mirror (framed) with bracket	1	—	14G 3745	A 40 Coupe Pub. 884/1, p. 15
Driving Mirror (framed) less bracket	1	—	14G 3746	A 70 Pub. 780A, p. 90
Bracket for mirror	1	*14G 3665	—	

* Not previously listed. Add to parts list after 14G 1412.

DOOR CASINGS

A 30

Further to the article appearing in this Journal, Volume 23, section "Body", page 53, introducing new door casings and rubber trim mouldings, due to production changes these new parts will not be produced. Therefore, all reference to the new part numbers must be cancelled.

FOR YOUR RECORDS	PARTS LISTS
	STOCK CARDS
	PARTS ORDERED
	ALTERATIONS NOTED

Printed in England March 1, 1954

LUGGAGE FLOOR

A 40

In order to simplify the loading of luggage into the rear boot of A 40 Saloon and Coupe cars a wooden floor is now fitted above the spare wheel. The floor is hinged to give maximum accessibility when it is necessary to remove or replace the spare wheel.

Also the petrol tank vent pipe has been split into two lengths to facilitate assembly now that the luggage floor is fitted. The front and rear vent pipes are joined with a short rubber connection.

INTERCHANGEABILITY

A conversion set of parts, comprising a wooden floor, supports, hinges and fixings, can be obtained by quoting part number G4–444. The two-piece air vent pipe can be used to replace the single air vent pipe.

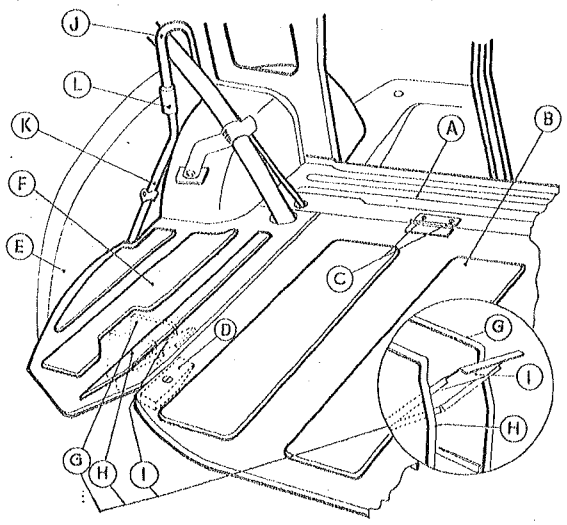

STR 1288

A = Luggage floor support
B = Luggage floor
C = Hinge for floor
D = Catch
E = Tonneau assembly
F = Side support for floor
G = Stiffener, front
H = Stiffener, rear
I = Bracket support
J = Petrol tank air vent pipe, front
K = Petrol tank air vent pipe, rear
L = Rubber connection for vent pipes

Commencing Body Numbers:—

A 40 Saloon—Sliding Roof	–	89945
Fixed Roof	–	91539
A 40 Coupe	–	5550

Continued

FOR YOUR RECORDS	PARTS LISTS
	STOCK CARDS
	PARTS ORDERED
	ALTERATIONS NOTED

LUGGAGE FLOOR—*continued*

SUMMARY OF ALTERATION

Description	Number Off	Old Part	New Part	Type and Parts List Publication Number
Luggage Floor Assembly	1	—	4G 2384	Saloon Pub. 884, p. 89 Coupe Pub. 884/1, p. 14
Nut Retainers	4	—	4G 1864	
Square Nuts	4	—	2K 2526	
Screws	4	—	6K 9461	
Spring Washers	4	—	2K 1209	
Catches	2	—	4G 2531	
Screws	2	—	2K 4345	
Nuts	2	—	2K 3975	
Plain Washers	2	—	2K 1202	
Hinges for luggage board	2	—	4G 2847	
Screws	4	—	6K 9461	
Spring Washers	4	—	2K 1209	
Tonneau Assembly, less boot lid	1	4G 1076	4G 3060	Saloon Pub. 884, p. 72
Tonneau Assembly, less boot lid	1	4G 3027	4G 3061	Coupe Pub. 884/1, p. 2
Air Vent Pipe	1	1G 1931	—	Saloon Pub. 884, p. 55
Rubber Connection	1	1B 431	—	
Air Vent Pipe, front	1	—	1G 2727	
Air Vent Pipe, rear	1	—	1G 2728	
Rubber Connections	2	—	1B 431	
Air Vent Pipe	1	1G 2190	—	Coupe Pub. 884/1, p. 1
Rubber Connection	1	1B 431	—	
Air Vent Pipe, front	1	—	1G 2729	
Air Vent Pipe, rear	1	—	1G 2730	
Rubber Connections	2	—	1B 431	

BODY SIDE PANELS AND WINGS

A 40 Pick-Up

The aluminium body panels have now been replaced by steel ones, and the rear wings have been modified in shape: screws and caged nuts have replaced the Dzus fasteners. The new design of the rear wings simplifies the removal of the rear wheels: the wing panels need not be removed.

INTERCHANGEABILITY

The new front panel, also the tailboard assembly, are interchangeable with their old counterparts. The steel body side panels are separately interchangeable with the aluminium type provided the fixing holes are altered to accept the old type wing. In the event of both right and left hand side panels being replaced, the new type wings should also be fitted. The new wings can be fitted to the aluminium type side panels provided holes are drilled for the fixing screws, and caged nuts are fitted on the inside of the panel to receive the screws.

SUMMARY OF ALTERATION

Description	Number Off	Old Part	New Part	Parts List Publication Number
Front Panel	1	4G 4865	14G 3784	Pub. 579/2, p. 18
Front Panel, outer, right hand	1	4G 4866	—	
Front Panel, outer, left hand	1	4G 4930	—	
Front Panel, lower	1	4G 4867	—	
Body Side Panel, right hand	1	14G 553	14G 3776	
Body Side Panel, left hand	1	14G 554	14G 3777	
Rear Skirt Panel	1	4G 3675	14G 3778	
Rear Pillar Finisher, right hand	1	4G 4470	14G 3779	
Rear Pillar Finisher, left hand	1	4G 4471	14G 3780	
Rivets, body sides to wheelarch panels	46	5C 5118	FRS 0204	
Tailboard Assembly	1	4G 1068	4G 3062	Pub. 579/2, p. 25
Tailboard Outer Panel	1	4G 4841	14G 3782	

COMMENCING BODY NUMBERS:—

Rear Wings – – 13853
Body Side Panels – – 13887

FOR YOUR RECORDS	PARTS LISTS
	STOCK CARDS
	PARTS ORDERED
	ALTERATIONS NOTED

Continued

BODY SIDE PANELS AND WINGS—*continued*

SUMMARY OF ALTERATION—*continued*

Description	Number Off	Old Part	New Part	Parts List Publication Number
Rear Wing, right hand	1	4G 1246	—	
Rear Wing, left hand	1	4G 1247	—	
Dzus Fasteners	8	4G 4858	—	
Retaining Rings	8	4G 4859	—	
Special Washers	8	6K 9564	—	
Spring and Plate Assemblies	8	4G 4860	—	
Rivets to body sides	16	5C 5432	—	Pub. 579/2, p. 44
Rubber Packings, rear wings to body	2	4G 1769	—	
Rear Wing, right hand	1	—	4G 3072	
Rear Wing, left hand	1	—	4G 3073	
Screws	16	—	PMZ 0412	
Shakeproof Washers	16	—	2K 8607	
Rubber Bushes	16	—	14G 3883	
Joint Moulding (plastic)	As req'd	—	4G 1677	

WING JOINT MOULDINGS

A 30, A 40, A 70, A 90, Austin-Healey 100

The plain wing mouldings hitherto supplied in ready-cut lengths, for application to each particular vehicle, will in future only be available in one-yard lengths, or multiples of one yard. When ordering always state the colour required together with length in yard units. This does not apply to composite mouldings consisting of plastic and leathercloth.

SUMMARY OF ALTERATION

Description	Number Off	Old Part	New Part	Type and Parts List Publication Number
Joint Mouldings (plastic), front wings, side lamps to windscreen panel	2	14A 1436	—	
Joint Mouldings (plastic), front wings, side to headlamps	2	14A 1437	—	A 30 Pub. 883B, Body Shell, p. 2
Joint Mouldings (plastic), front wings, headlamps to apron	2	14A 1438	—	
Wing Moulding (plastic)	As req'd	—	4G 1677	

Continued

WING JOINT MOULDINGS—*continued*

SUMMARY OF ALTERATION—*continued*

Description	Number Off	Old Part	New Part	Type and Parts List Publication Number
Joint Mouldings (plastic), front wing crown and wings to scuttle side	2	4G 1678	—	A 40 Saloon Pub. 416B, p. 151
Joint Mouldings (plastic), front wing crown, below headlamps	2	4G 1679	—	
Joint Mouldings (plastic), front wings to front apron	2	4G 1680	—	
Joint Mouldings (plastic), rear wings to body	2	4G 1681	—	
Wing Moulding (plastic)	As req'd	—	4G 1677	
Joint Mouldings (plastic), front wing crown and wings to scuttle side	2	4G 1678	—	A 40 Commercials Pub. 579A, p. 141
Joint Mouldings (plastic), front wing crown, below headlamps	2	4G 1679	—	
Joint Mouldings (plastic), front wings to front apron	2	4G 1680	—	
Wing Moulding (plastic)	As req'd	—	4G 1677	
Joint Mouldings (plastic), front wing crown and wings to scuttle side	2	4G 1678	—	A 40 Commercials Pub. 579/2, p. 44
Joint Mouldings (plastic), front wing crown, below headlamps	2	4G 1679	—	
Wing Moulding (plastic)	As req'd	—	4G 1677	
Joint Mouldings, rear wings to body	2	14G 3882	—	A 40 Commercials Pub. 579/1, p. 30
Wing Moulding (plastic)	As req'd	—	4G 1677	
Joint Mouldings, rear wings to body	2	14G 815	—	A 40 Saloon Pub. 884, p. 93
Wing Moulding (plastic)	As req'd	—	4G 1677	

Continued

WING JOINT MOULDINGS—*continued*

SUMMARY OF ALTERATION—*continued*

Description	Number Off	Old Part	New Part	Type and Parts List Publication Number
Front Wing Top Joint Mouldings (plastic)	2	14G 1682	—	A 40 Sports Pub. 805/1, p. 38
Front Wing Front Upper Joint Mouldings (plastic)	2	14G 1683	—	
Front Wing Front Lower Joint Mouldings (plastic)	2	14G 1684	—	
Rear Wing Top Joint Mouldings (plastic)	2	14G 1685	—	
Wing Moulding (plastic)	As req'd	—	4G 1677	
Joint Mouldings (plastic), front wing crown and wings to scuttle side	2	4B 2441	—	A 70 Saloon Pub. 603A, pp. 115/116
Joint Mouldings (plastic), front wings to front apron	2	4B 2442	—	
Joint Mouldings, rear wings to body	2	4B 2443	—	
Wing Moulding (plastic)	As req'd	—	4G 1677	
Joint Moudings (plastic), front wing crown and wings to scuttle side	2	4B 2441	—	A 70 Pick-Up Pub. 730, p. 90
Joint Mouldings (plastic), front wings to front apron	2	4B 2442	—	
Wing Moulding (plastic)	As req'd	—	4G 1677	
Joing Mouldings (plastic), rear wings	2	4B 9462	—	A 70 Saloon Pub. 780A, p. 93
Wing Moulding (plastic)	As req'd	—	4G 1677	
Joint Mouldings, front wing crowns	2	4B 5871	—	A 90 Pub. 787, p. 115
Joint Mouldings, front wings to fenders	2	4B 5872	—	
Wing Moulding (plastic)	As req'd	—	4G 1677	
Front Wing Front Upper Joint Mouldings (plastic)	2	14B 2509	—	Austin-Healey 100
Front Wing Front Lower Joint Mouldings (plastic)	2	14B 2510	—	
Wing Moulding (plastic)	As req'd	—	4G 1677	

DOOR SEALING RUBBERS

A 40, A 70

New sealing rubbers, held in position by metal retainers welded to the doors, are now being fitted on the front and rear doors.

INTERCHANGEABILITY

The new sealing rubbers are not interchangeable with their old counterparts. It is essential that the correct part numbers are quoted when ordering sealing rubbers only.

Complete door assemblies are interchangeable, the part numbers remaining unchanged.

SUMMARY OF ALTERATION

Description	Number Off	Old Part	New Part	Type and Parts List Publication Number
Sealing Rubbers for front doors .	2	*4G 6603	14G 1693	A 40 Saloon Pub. 884, p. 77
Sealing Rubbers for rear doors .	2	*4G 6604	14G 1694	
Sealing Rubbers for rear door hinge pillars	2	—	14G 1696	A 70 Saloon Pub. 780A, p. 73
Sealing Rubbers for front doors .	2	4G 6603	14G 1693	A 70 Pick-up Pub. 853/1, p. 6

*Not previously listed in Publication No. 884.

COMMENCING BODY NUMBERS:—

A 40 Saloon — —	97679
A 70 Saloon — —	20241

FOR YOUR RECORDS	
	PARTS LISTS
	STOCK CARDS
	PARTS ORDERED
	ALTERATIONS NOTED

SEATS

Austin-Healey 100

Seat slides have been introduced for the driver's seat on both right and left hand steering models, so that the seat can be adjusted to suit the driver's requirements. The passenger's seat has been raised to the same level as the driver's seat by fitting packing strips. Three holes have been drilled either side of the passenger's seat base panel so that the seat may be secured in any one of three positions.

INTERCHANGEABILITY

The new seat slides can be fixed to existing cars having the fixed seat, if required. A conversion set of parts consisting of the seat slides, packings, and fixings for both seats, has been made available, and can be obtained by quoting part number B3–634 for R.H. Steering, or B3–635 for L.H. Steering.

SUMMARY OF ALTERATION

Description	Number Off	Old Part	New Part	Parts List Publication Number
Tapped plates—seat fixing	4	14B 2635	—	Pub. 1050, Seats, p. 1
Screws to floor	8	51K 1097	—	
Nuts for screws	8	FNZ 103	—	
Plain washers	8	PWZ 103	—	
Spring washers	8	2K 1209	—	
Bolts, seat to tapped plates	4	53K 928	—	
Plain washers	4	PWZ 105	—	
Spring washers	4	2K 1211	—	
Seat slide assembly (with lever), left hand, R.H. Steering	1	—	14B 2767	
Seat slide assembly (with lever), right hand, L.H. Steering	1	—	14B 2774	
Seat slide assembly	1	—	14B 2768	
Seat base packers—top	4	—	14B 2880	
Base packers	2	—	14B 2834	
Washer plates	6	—	14B 2881	
Bolts, base packers and washer plates to floor	6	—	HBZ 0410	

COMMENCING BODY NUMBER: 1001

FOR YOUR RECORDS	PARTS LISTS
	STOCK CARDS
	PARTS ORDERED
	ALTERATIONS NOTED

Continued

SEATS—*continued*

SUMMARY OF ALTERATION—*continued*

Description	Number Off	Old Part	New Part	Parts List Publication Number
Nuts	6	—	FNZ 104	Pub. 1050, Seats, p. 1
Plain washers (small)	9	—	PWZ 104	
Spring washers	6	—	LWZ 104	
Nuts, seat slide to seat base panel	6	—	FNZ 104	
Plain washers	6	—	PWZ 204	
Spring washers	6	—	LWN 204	
Tee-nuts, fixing seat and slides to floor	6	—	14B 2877	
Plain washers	3	—	PWZ 106	
Spring washers	6	—	LWZ 206	
Bolts for passenger seat	4	—	HBZ 0408	
Plain washers (small)	4	—	PWZ 104	
Covering for underseat, right hand	1	4B 2124	4B 2144	
Covering for underseat, left hand	1	4B 2125	4B 2145	
Insulations—underseat	2	—	14B 2885	

WATERPROOFING AND DUST SEALING

A30

It is possible, after a vehicle has been involved in an accident resulting in damage to the body, for various joints to subsequently admit dust and water. In order to effectively reseal the affected joints, whether they are metal to metal, metal to rubber, or rubber to glass, the following list of sealing and adhesive compounds, indicating the respective positions in which they are to be applied, has been compiled. Reference to Figs. 1, 2, 20, 21, 24, 25, 30 and 31 will facilitate the identification of the joints which must be sealed.

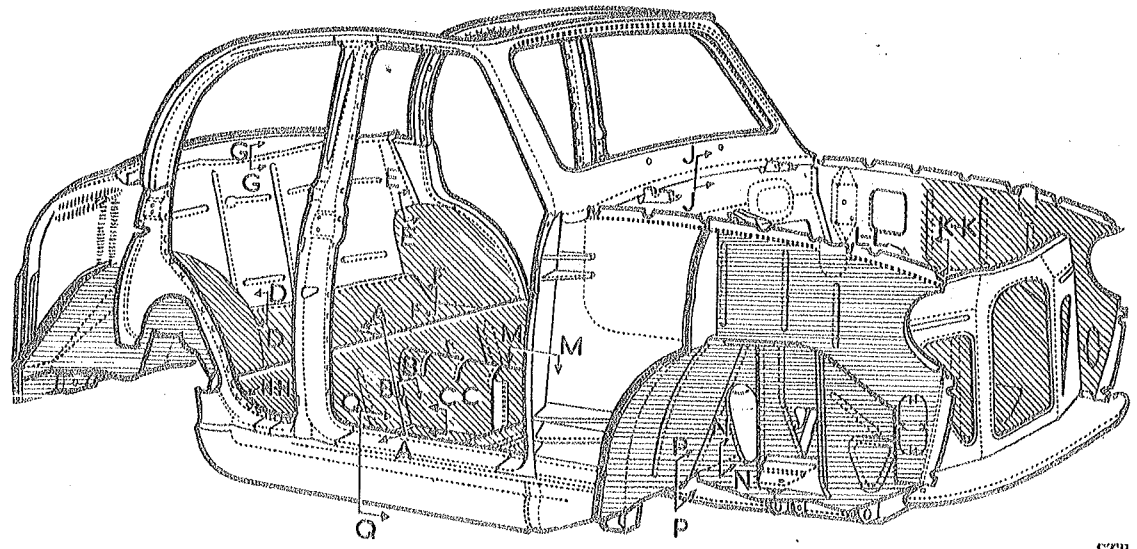

Fig. 1

STR 1368

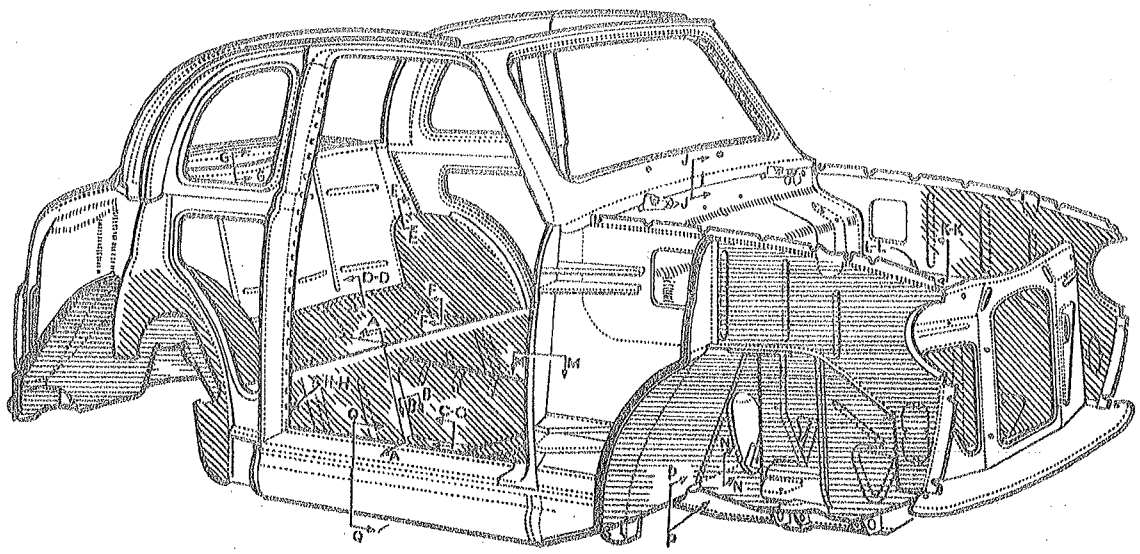

Fig. 2

STR 1367

Continued

WATERPROOFING AND DUST SEALING—*continued*

The shaded areas in Figs. 1, 2, 20, 21, 24 and 25 should be treated with the type of sealing or deadening compound referred to in Fig. 3.

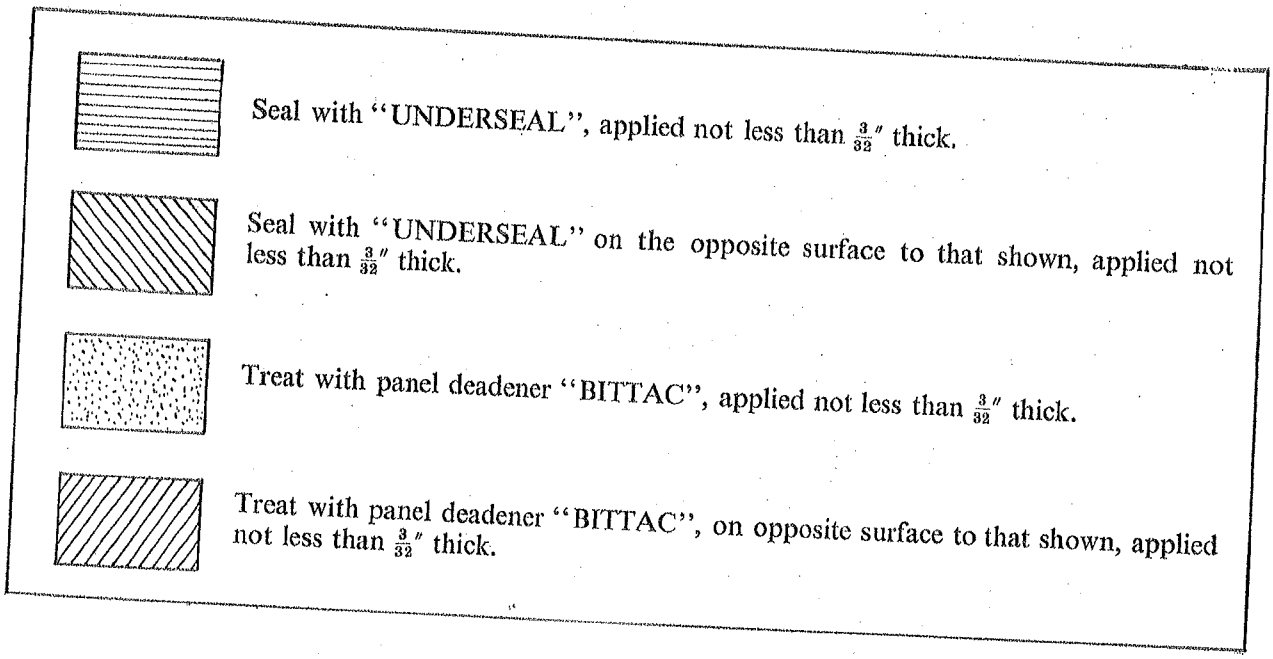

Fig. 3

STR 1369

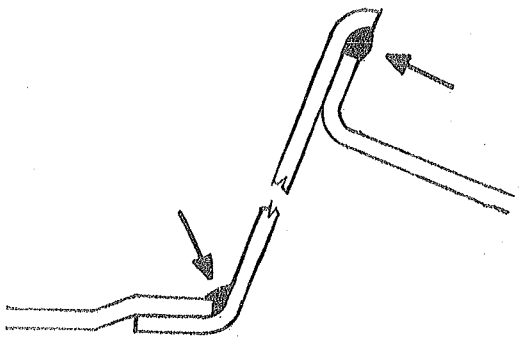

Fig. 4

STR 1334

Joint, heelboard to floor panel.
Use "SEELASTIC" or "SUPRASEAL", and apply evenly over the entire length of the joint.
Section "AA", Figs. 1 and 2.

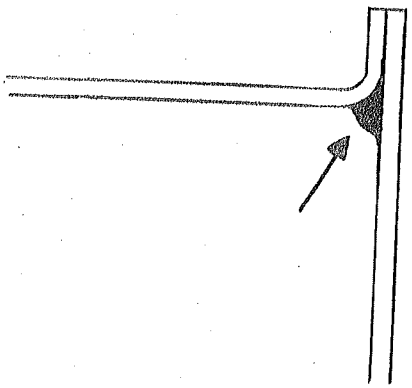

Fig. 5

STR 1335

Joint, heelboard to tunnel floor.
Use "SUPRASEAL" or "SEELASTIC".
Section "BB", Figs. 1 and 2.

WATERPROOFING AND DUST SEALING—*continued*

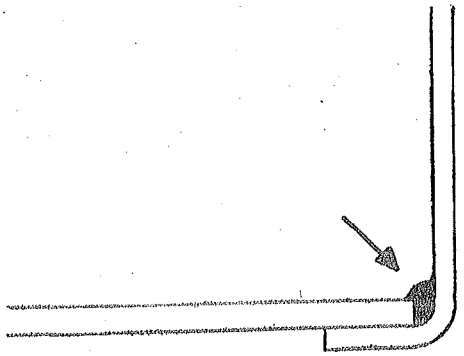

Fig. 6 STR 1336

Joint, body floor to tunnel floor.
Use "SEELASTIC" or "SUPRASEAL".
Section "CC", Figs. 1 and 2.

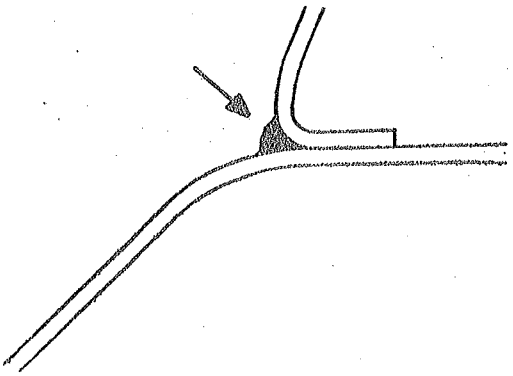

Fig. 7 STR 1337

Joint, seat pan to panel seat back.
Use "SEELASTIC" or "SUPRASEAL".
Section "DD", Figs. 1 and 2.

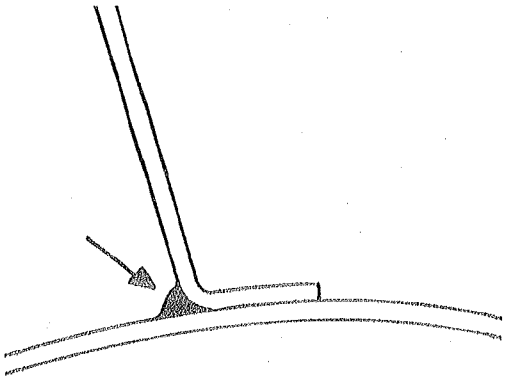

Fig. 8 STR 1338

Joint, panel seat back to wheelarch.
Use "SUPRASEAL" or "SEELASTIC".
Section "EE", Figs. 1 and 2.

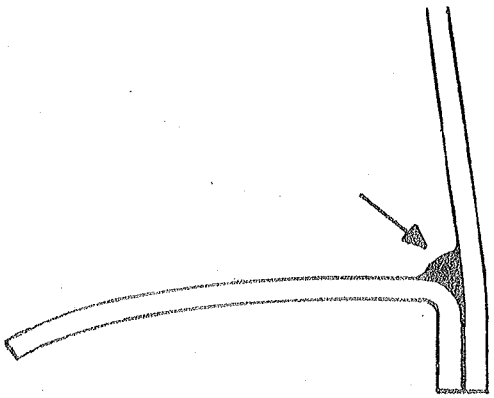

Fig. 9 STR 1339

Joint, wheelarch to seat pan.
Use "SUPRASEAL" or "SEELASTIC".
Section "FF", Figs. 1 and 2.

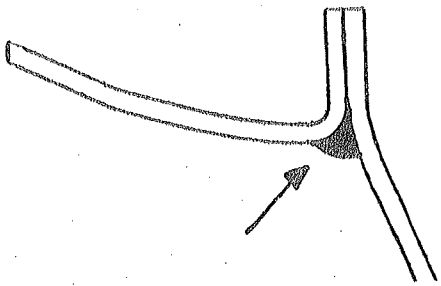

Fig. 10 STR 1340

Joint, panel seat back to parcel shelf.
Use "SUPRASEAL" or "SEELASTIC".
Section "GG", Figs. 1 and 2.

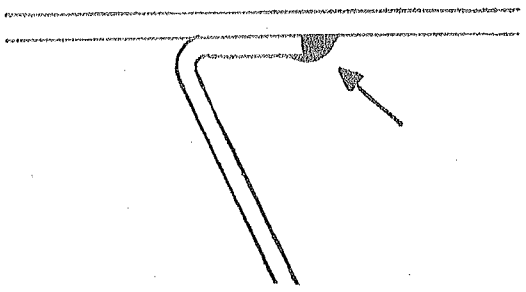

Fig. 11 STR 1341

Joint, sill inner panel to heelboard.
Use "SUPRASEAL" or "SEELASTIC".
Section "HH", Figs. 1 and 2.

Continued

WATERPROOFING AND DUST SEALING—*continued*

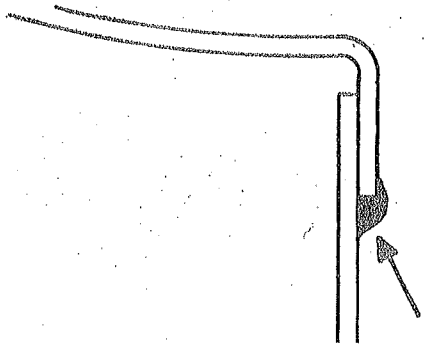

Fig. 12 STR 1342

Joint, windshield panel to dash panel.
Use "SUPRASEAL" or "SEELASTIC".
Section "JJ", Figs. 1 and 2.

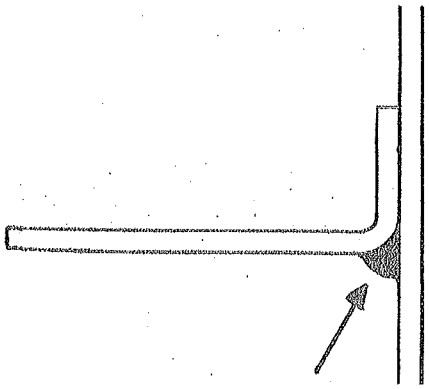

Fig. 13 STR 1343

Joint, dash panel to flitchplate.
Use "SUPRASEAL" or "SEELASTIC".
Section "KK", Figs. 1 and 2.

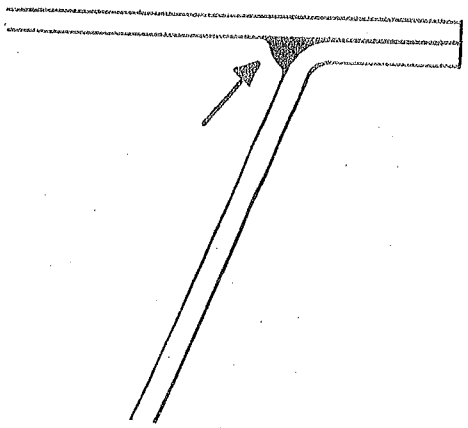

Fig. 14 STR 1344

Joint, dash panel to toeboard.
Use "SUPRASEAL" or "SEELASTIC".
Section "LL", Figs. 1 and 2.

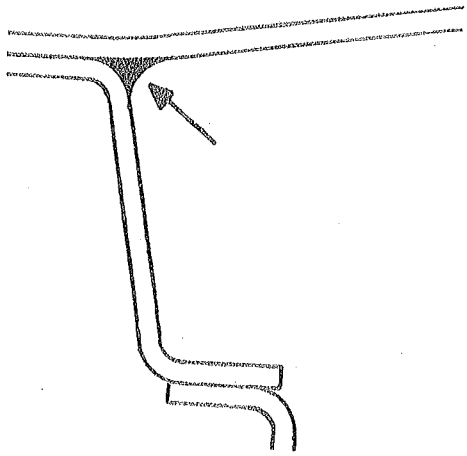

Fig. 15 STR 1345

Joint, flitchplate to windshield, reinforcement post to front wing.
Use "SUPRASEAL" or "SEELASTIC".
Section "MM", Figs. 1 and 2.

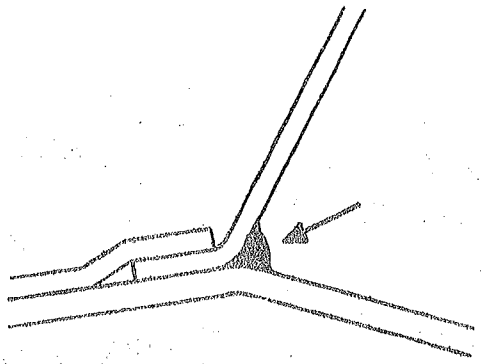

Fig. 16 STR 1346

Joint, floor panel to toeboard adjoining the side frame.
Use "SUPRASEAL" or "SEELASTIC".
Section "NN", Figs. 1 and 2.

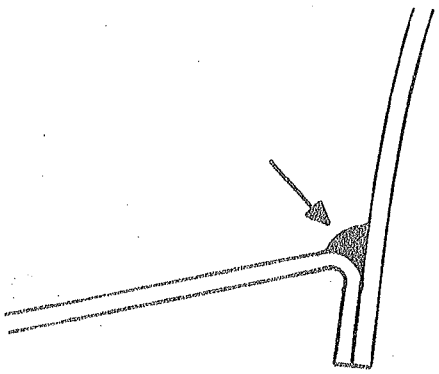

Fig. 17 STR 1347

Joint, toeboard to floorboard panel.
Use "SUPRASEAL" or "SEELASTIC".
Section "PP", Figs. 1 and 2.

Continued

WATERPROOFING AND DUST SEALING—*continued*

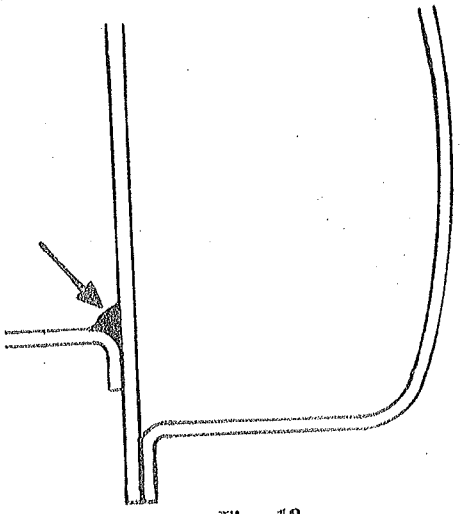

Fig. 18 *STR 1348*

Joints, sill inner panel to floor panel, and where sill outer panel joins sill inner panel.
Use "SUPRASEAL" or " SEELASTIC".
Section "QQ", Figs. 1 and 2.

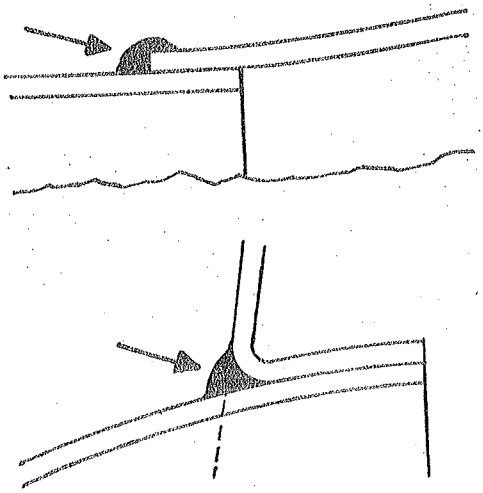

Fig. 19 *STR 1349*

Joints, gearbox cover to tunnel floor, and gearbox cover to toeboard and front floor panel.
Use "SUPRASEAL" or "SEELASTIC".
(Not shown on Figs. 1 and 2).

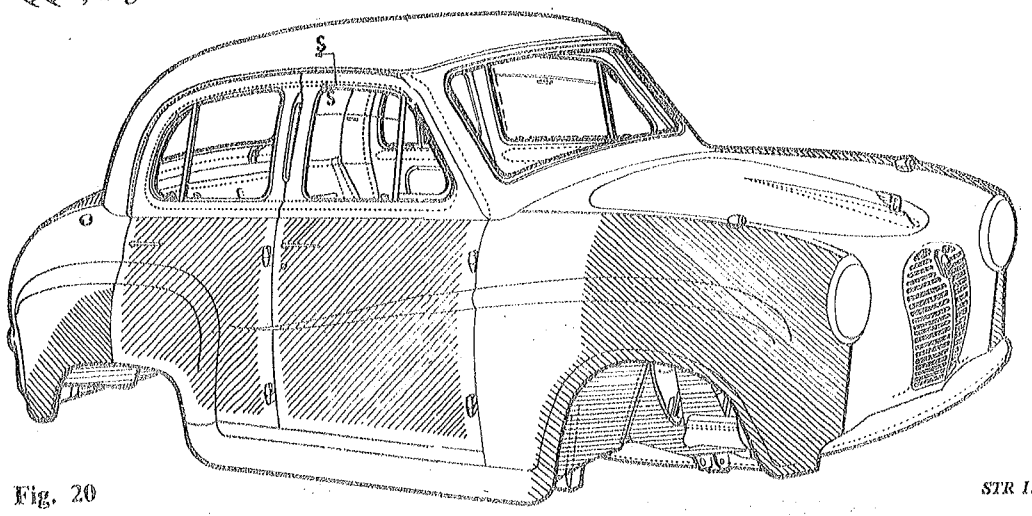

Fig. 20 *STR 1364*

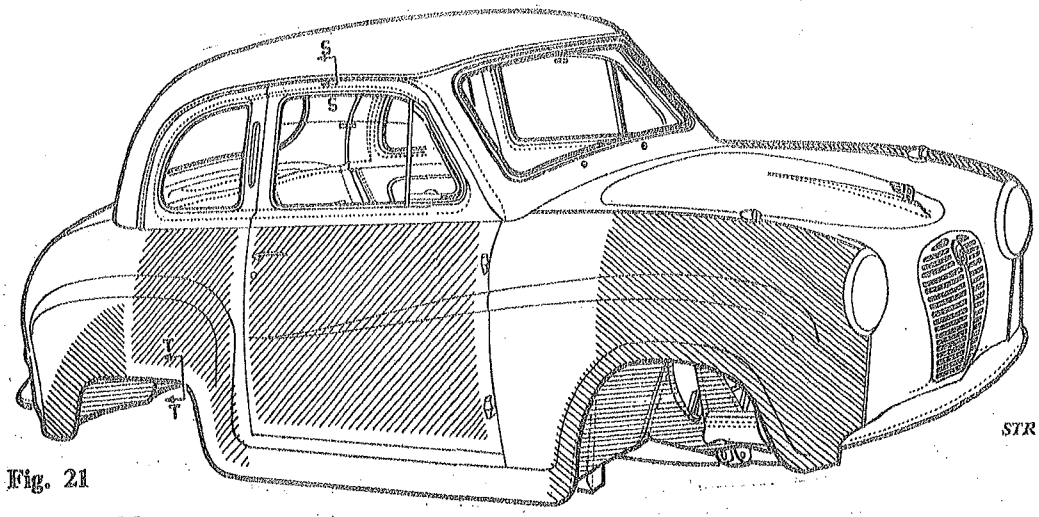

Fig. 21 *STR 1363*

Continued

VOLUME 24—CARS
Issue 5
Published April 26, 1954.

WATERPROOFING AND DUST SEALING—*continued*

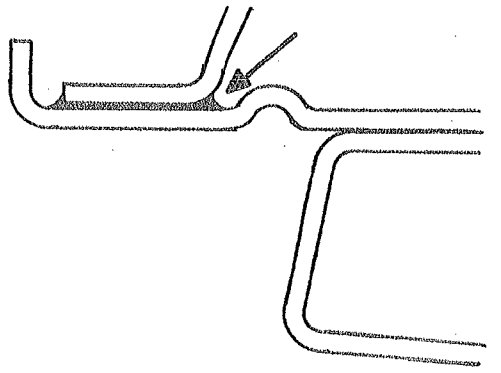

Fig. 22 STR 1350

Joint, roof panel to drip-moulding.
Use "SUPRASEAL" or "SEELASTIC".
Section "SS", Figs. 20 and 21.

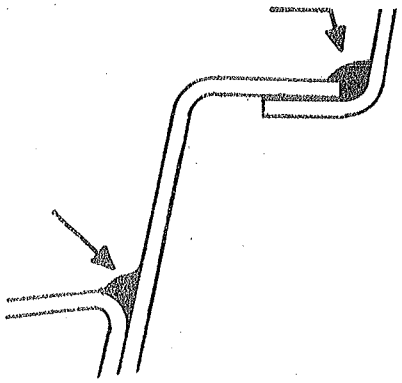

Fig. 23 STR 1352

Joints, panel rear lower, to panel rear lower extension to boot floor.
Use "SUPRASEAL" or "SEELASTIC",
Section "TT", Fig. 24.

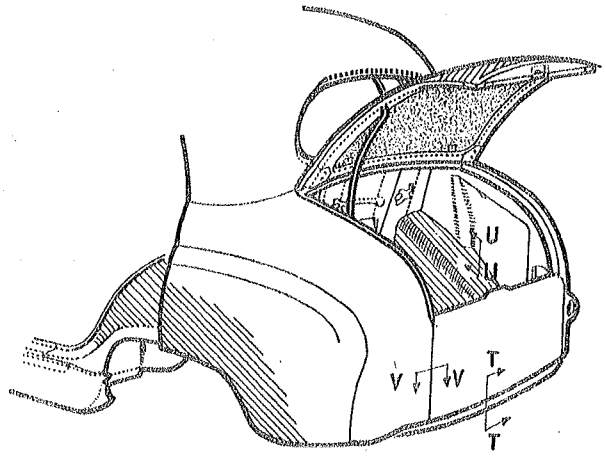

Fig. 24 STR 1366

Rear end of the body—4 door.

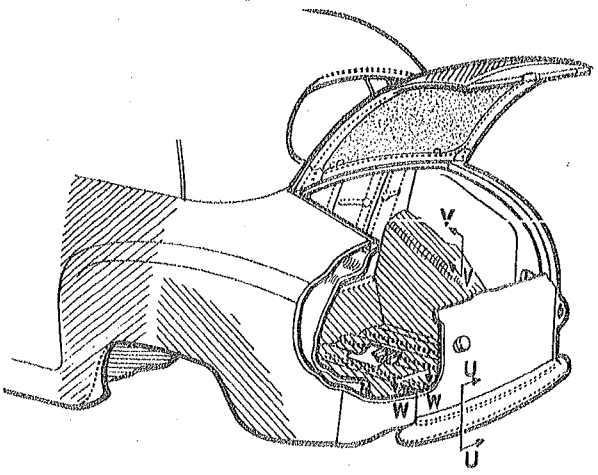

Fig. 25 STR 1365

Rear end of the body—2 door.

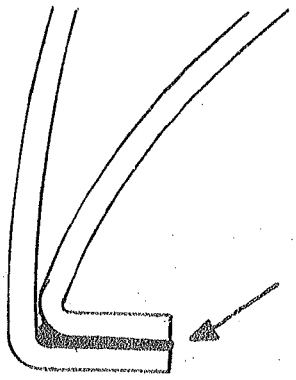

Fig. 26 STR 1351

Joints, rear quarter panel, outer, to front end rear wheelarch, and sill inner panel.
Use "SUPRASEAL" or "SEELASTIC".
Section "TT", Fig. 21.

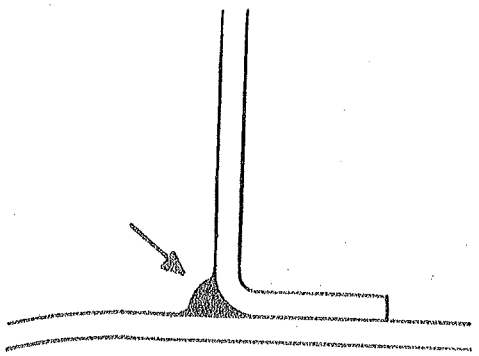

Fig. 27 STR 1353

Joint, panel rear quarter, inner, to wheelarch.
Use "SUPRASEAL" or "SEELASTIC".
Section "UU", Fig. 24, Section "VV", Fig. 25.

Continued

WATERPROOFING AND DUST SEALING—*continued*

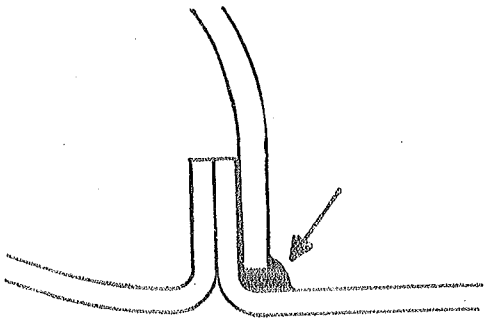

Fig. 28 *STR 1354*

Joints, panel rear quarter, inner, to panel rear lower and tonneau panel.
Use "SUPRASEAL" or "SEELASTIC".
Section "VV", Fig. 24, Section "WW" Fig. 25.

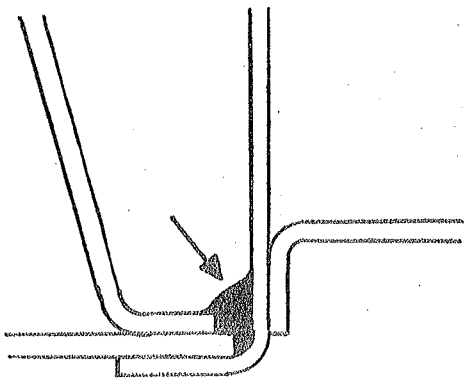

Fig. 29 *STR 1355*

Joint, rear seat pan, panel rear, lower rear apron, and petrol tank support.
Use "SUPRASEAL" or "SEELASTIC".
Section "UU", Fig. 25.

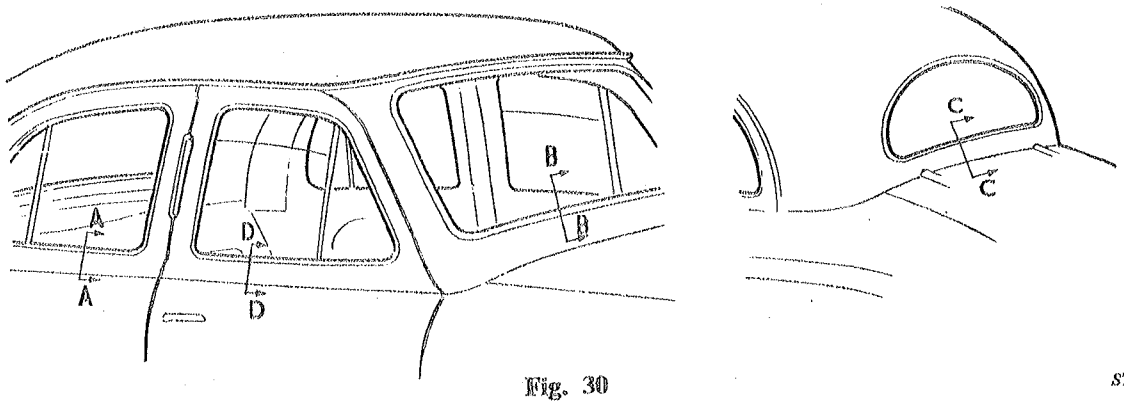

Fig. 30 *STR 1361*

Upper half of the body showing glass and weatherstrips—4 door saloons.

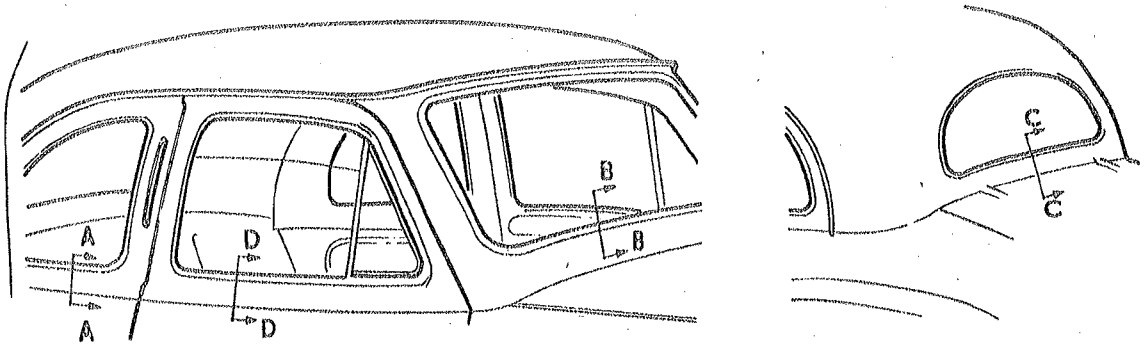

Fig. 31 *STR 1356*

Upper half of the body showing glass and weatherstrips—2 door saloons.

Continued

WATERPROOFING AND DUST SEALING—*continued*

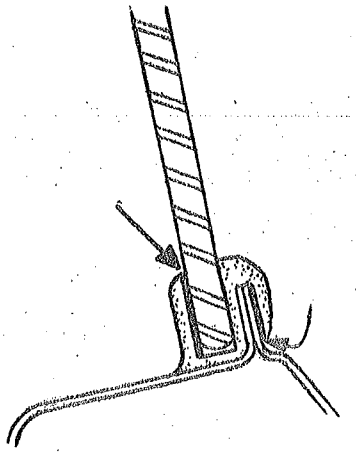

Fig. 32 STR 1362

Rear door weatherstrip.
Use "BOSTIK" No. 1222.
Section "AA", Fig. 30.

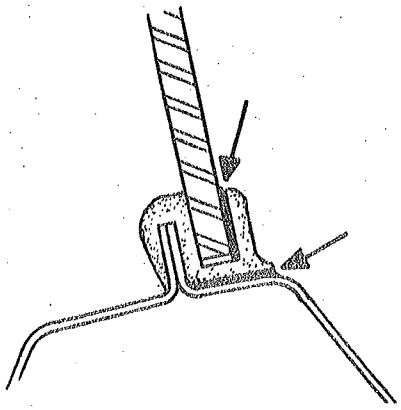

Fig. 33 STR 1357

Rear quarter light weatherstrip.
Use "BOSTIK" No. 1222.
Section "AA", Fig. 31.

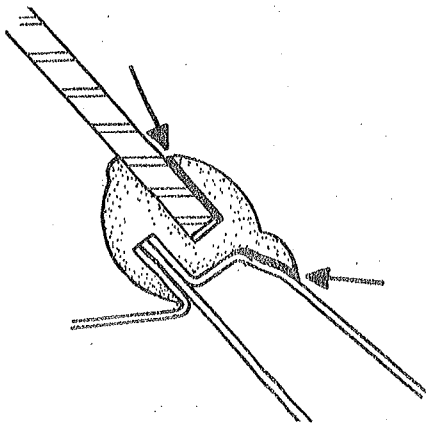

Fig. 34 STR 1358

Windscreen weatherstrip.
Use "BOSTIK" No. 1222.
Section "BB", Figs. 30 and 31.

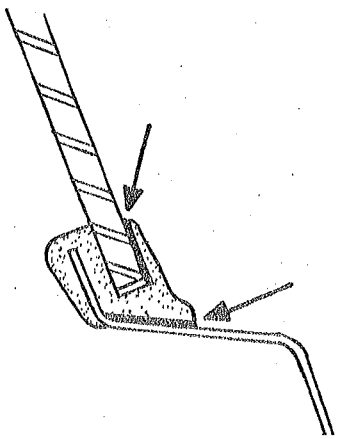

Fig. 35 STR 1359

Backlight glass and roof panel weatherstrip.
Use "BOSTIK" No. 1222.
Section "CC", Figs. 30 and 31.

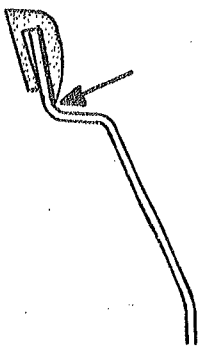

Fig. 36 STR 1360

Door weatherstrips.
Use "BOSTIK" Type "C"
Section "DD", Figs. 30 and 31.

DOORS

A 30

If difficulty is experienced in closing the doors, after a car has been in use for some time, then one or more of the following remedies will cure the trouble. It should be understood, however, that this article does not refer to doors which have in any way been damaged or distorted.

1. First check the door striker plate to ensure that it is perfectly tight.
2. Inspect the draught roll and door weatherstrip; if there is evidence of these being "pinched" or "trapped", slight adjustment of the door hinges will probably cure the fault.
3. Should this fail, remove the draught roll from around the cantrail door sill, and door pillar lips, and with a block of wood, gently tap back the lip or flange at the point where the draught excluder has been trapped, at the same time carefully avoiding damage to the small metal tags.
4. Check the door hinge screws, if these are not tight the heads will protrude sufficiently to foul the door pillar before the door is completely closed.
5. When all the above adjustments have been carried out, minor readjustments to the striker plate may be necessary.

WINDOW REGULATORS

A 30

To improve the efficiency, the following modifications have been introduced on the window regulators.

1. The regulator arms "A" are now CADMIUM Plated.
2. The fibre washer "B" is replaced by a rubber washer "C".
3. The pivot bolt "D" and locknuts "E" are replaced by a drilled bolt "F" with a castellated nut "G" and split pin "H".
4. The regulator spring "J" is replaced by one of larger diameter, heavier gauge steel and a reduced number of coils "K"; the hook of the new spring is located in the first notch "L" of the short regulator arm.

The combination of these modifications will increase the friction between the regulator arms, and give more support to the window glass.

INTERCHANGEABILITY

The new regulator assembly is interchangeable with the old type and the part number remains unchanged. If any difficulty is experienced on older cars the new spring can be fitted and the friction joint "B" readjusted.

When correctly adjusted the friction should be sufficient to balance a 3 to 3½ lb. weight suspended from point "M" (spring removed) with the arm in the horizontal position.

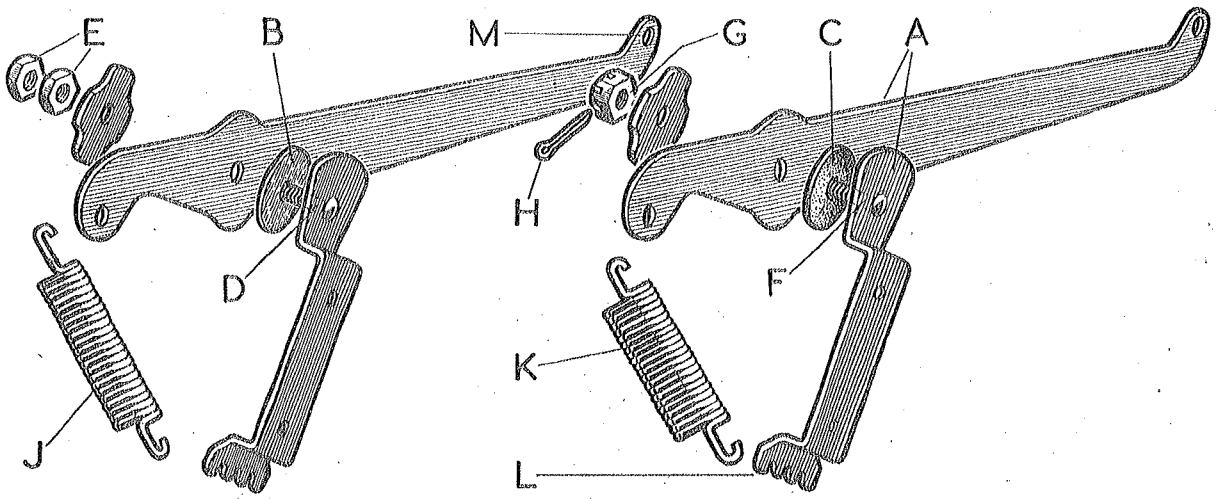

STR 1452

Continued

FOR YOUR RECORDS	PARTS LISTS
	STOCK CARDS
	PARTS ORDERED
	ALTERATIONS NOTED

Printed in England, July 19, 1954

WINDOW REGULATORS—*continued*

SUMMARY OF ALTERATION

Type	Range	Plate	Description	Number per Vehicle	Austin Part Number	Parts List Publication Number
A2S.4 AS.4	To B. 18086 To B. 405107		Springs for window regulators . .	2	14A 2467	Pub. 883B/1, p. 12
A2S.4 AS.4	B. 18087 on B. 405108 on		Springs for window regulators . .	2	14A 3508	

DOOR HANDLES

A 70

The outside rear door handle on Hereford cars now embodies a packing under the contactor screw to facilitate production assembly.

The new handle is obtainable by quoting part number 14G 2956. The old handle 4B 8689 which was fitted to both front and rear doors will continue to be fitted to the front doors.

SUMMARY OF ALTERATION

Description	Number Off	Old Part	New Part	Type and Parts List Publication Number
Outside Door Handles	4	4B 8689	—	A 70 Saloon, Pub. 780A, p. 72
Outside Door Handles, front doors .	2	—	4B 8689	
Outside Door Handles, rear doors . .	2	—	14G 2956	

BONNET TOP ASSEMBLY

Austin-Healey 100

A new type steel bonnet top is now being fitted replacing the aluminium type fitted hitherto; there is no change in part number, 4B 1038, and the new bonnet top assembly is interchangeable.

COMMENCING BODY NUMBER: 3397

BONNET CATCH

Austin-Healey 100

A modified type of bonnet catch is now being fitted, the lock ring for the striker pin has now been replaced by a locknut.

INTERCHANGEABILITY: The new striker pin assembly and spring can be used separately to replace their old counterparts.

SUMMARY OF ALTERATION

Type	Range	Plate	Description	Number per Vehicle	Austin Part Number	Parts List Publication Number
Austin-Healey 100	To B. 1949		Striker Pin Assembly Spring	1 1	ADH 457 ADA 459	Pub. 1050, Bonnet, p. 1
	B. 1950 on		Striker Pin Assembly Spring	1 1	14B 2845 14B 2846	

FOR YOUR RECORDS	PARTS LISTS
	STOCK CARDS
	PARTS ORDERED
	ALTERATIONS NOTED

Published July 19, 1954

DOOR LOCK STRIKER

Austin-Healey 100

A new door lock striker with tapped plate and packing plate for both right and left hand doors, has been introduced. The shut pillar face cover plate has also been modified, the recess being made wider to accept the new lock striker.

INTERCHANGEABILITY

New and old parts are not interchangeable.

SUMMARY OF ALTERATION

Descriptio	Number Off	Old Part	New Part	Parts List Publication Number
Shut Pillar Face Cover Plate, right hand	1	14B 1755	14B 2837	Pub. 1050,
Shut Pillar Face Cover Plate, left hand	1	14B 1756	14B 2838	Body Shell,
Screws	12	*6K 9627	—	p. 1
Door Lock Strikers	2	14B 1715	14B 2841	
Packing Plates	2	4G 7593	14B 2842	Pub. 1050,
Tapped Plates	2	*4G 7594	14B 2843	Doors,
Screws	8	*54K 2777	RMP 0312	p. 1

*Not previously listed.

COMMENCING BODY NUMBER: 2236.

FOR YOUR RECORDS	PARTS LISTS
	STOCK CARDS
	PARTS ORDERED
	ALTERATIONS NOTED

HEATER

A 40

A new heater hose, part number 14G 4825, blower to heater, has been introduced as an alternative to the one fitted at present, part number 4B 8694. Also the heater pipe fixing strap, hitherto welded to the left hand flitchplate, is now secured by means of a nut, bolt and washer through either one of two holes drilled in the flitchplate, depending on which hose is fitted.

INTERCHANGEABILITY

The new hose can only be used on vehicles fitted with the modified fixing straps.

SUMMARY OF ALTERATION

Type	Range	Plate	Description	Number per Vehicle	Austin Part Number	Parts List Publication Number
A 40	B. 118145 on (Sunshine Roof) B. 120243 on (Fixed Head)		Hose, blower to heater	1	14G 4825	Pub. 1099, Heater, p. 3
			Fixing Strap Heater Pipe	1	14G 934	
			Screw	1	HZS 0405	
			Washer	1	PWZ 104	
			Nut	1	LNZ 204	

FOR YOUR RECORDS	PARTS LISTS
	STOCK CARDS
	PARTS ORDERED
	ALTERATIONS NOTED

Published July 19, 1954

SEATS, FRONT AND REAR

A 40 Somerset Saloon

To improve design, front and rear seat squabs, right and left hand, which were padded with rubberised hair (see this Journal, Volume 23, section "Body", pages 29/30) have been replaced by spring cases and padding, also wadding in the case of the front squabs.

As a result of this modification the front seat squab frames and front seat squab fillings are no longer required.

INTERCHANGEABILITY

The new seat squabs can be used to replace the old type.

SUMMARY OF ALTERATION

Type	Range	Plate	Description	Number per Vehicle	Austin Part Number	Parts List Publication Number
A 40	To B. 49587		Front seat assembly, right hand	1	4G 3124	Pub. 1099 Seats p. 4
			Front seat assembly, left hand	1	4G 3125	
			Front seat frame assembly, right hand	1	4G 7418	
			Front seat frame assembly, left hand	1	4G 7419	
	B. 49588 on		Front seat assembly, right hand	1	4G 2129	
			Front seat assembly, left hand	1	4G 2130	
			Front seat frame assembly, right hand	1	4G 8400	
			Front seat frame assembly, left hand	1	4G 8401	
	To B. 49587		Front seat cushion assembly, right hand	1	G4-410	
			Front seat cushion assembly, left hand	1	G4-411	
			Front seat squab assembly, right hand	1	G4-412	
			Front seat squab assembly, left hand	1	G4-413	
	B. 49588 on		Front seat cushion assembly, right hand	1	G4-418	
			Front seat cushion assembly, left hand	1	G4-419	
			Front seat squab assembly, right hand	1	G4-420	
			Front seat squab assembly, left hand	1	G4-421	
	To B. 49587		Front seat cushion frame, right hand	1	4G 7409	
			Front seat cushion frame, left hand	1	4G 7410	

Continued

FOR YOUR RECORDS	PARTS LISTS
	STOCK CARDS
	PARTS ORDERED
	ALTERATIONS NOTED

SEATS, FRONT AND REAR—*continued*

SUMMARY OF ALTERATION—*continued*

Type	Range	Plate	Description	Number per Vehicle	Austin Part Number	Parts List Publication Number
A 40	B. 49588 on		Front seat cushion frame, right hand	1	4G 8404	Pub. 1099 Seats p. 4
			Front seat cushion frame, left hand	1	4G 8405	
	To B. 49587		Front seat squab frame, right hand	1	4G 7420	
			Front seat squab frame, left hand	1	4G 7421	
	B. 49588–97669		Front seat squab frame, right hand	1	4G 8402	
			Front seat squab frame, left hand	1	4G 8403	
	To B. 49587		Front seat squab filling (foam rubber), right hand	1	4G 6751	
			Front seat squab filling (foam rubber), left hand	1	4G 6752	
	B. 49588–97669		Front seat squab filling (rubberised hair), right hand — Alternatives	1	14G 1753	
			Front seat squab filling (rubberised hair), right hand — Alternatives	1	14G 1895	
			Front seat squab filling (rubberised hair), left hand — Alternatives	1	14G 1754	
			Front seat squab filling (rubberised hair), left hand — Alternatives	1	14G 1896	
	B. 97670 on		Spring case, front squab, right hand	1	14G 3697	Pub. 1099 Seats p. 5
			Spring case, front squab, left hand	1	14G 3698	
			Front squab paddings	2	14G 3699	
			Front squab waddings	2	4G 2723	
			Staples, front squab trim to spring case	40	5C 2094	
			Clips, cushion trimming	14	4G 6977	
			Clips, squab trimming	40	4G 2407	
	To B. 49587		Rear squab filling (foam rubber)	1	4G 8650	
	B. 49588–97669		Rear squab filling (rubberised hair)	1	14G 1755	
	B. 97670 on		Rear squab spring case	1	14G 3684	
			Rear squab padding	1	14G 3685	
			Staples, padding to spring case	24	5C 2094	
			Staples, spring case to trim batten	10	2H 6505	
			Clips, cover to spring case	30	4G 2407	
			Screws, spring case to body	2	51K 2992	

HEATER BLOWER UNIT

A 30

The screws securing the blower unit to the dash panel are now welded to the blower unit bracket, and the projection weld nuts on the dash panel have been replaced by nuts and washers. A rubber plug has also been introduced for blanking off the holes in the dash panel when a blower unit is not fitted.

INTERCHANGEABILITY

The blower unit with the welded screws can be used for replacement purposes providing the projection weld nuts on the dash panel are removed first.

SUMMARY OF ALTERATION

Description	Number Off	Old Part	New Part	Type and Parts List Publication Number
Metal Threads, blower fixing . .	2	HZS 0404	—	A2S.4 Pub. 883B/1, p. 20
Plain Washers	2	—	PWZ 104	
Nuts	2	—	FNZ 104	
Rubber Plugs (when blower unit is NOT fitted)	2	—	4G 6492	

FOR YOUR RECORDS	PARTS LISTS
	STOCK CARDS
	PARTS ORDERED
	ALTERATIONS NOTED

ONE-PIECE FRONT SEAT

A 40

New rear carpets have been introduced to be fitted in conjunction with one-piece front seats. These are identical with the carpets used when front bucket seats are fitted, with the exception that the slots to suit the seat runners are deleted. Details of the one-piece front seat introduced as an alternative to bucket-type seats appear in this Journal, Volume 24, section "Body", page 35.

SUMMARY OF ALTERATION

Description	Number per Vehicle	Part Number	Parts List Publication Number
Rear Carpet (less runner slot), right hand .	1	14G 3731	Pub. 1099,
Rear Carpet (less runner slot), left hand . .	1	14G 3732	Carpets, p. 2

FOR YOUR RECORDS	PARTS LISTS
	STOCK CARDS
	PARTS ORDERED
	ALTERATIONS NOTED

Issue 7

Published July 19, 1954

SEATS AND ARMRESTS, FITTED IN HIDE

A 40 Somerset Saloon

As an alternative to leathercloth, rear seats and either bucket or bench type front seats, and front armrest door pulls, can be fitted with hide covers if specially required. New part numbers have been issued to cover leathercloth and the old part numbers already issued have been retained for parts covered in hide. All parts not listed in the summary are common to both conditions.

INTERCHANGEABILITY

Not affected.

SUMMARY OF ALTERATION

Description	Number Off	Leathercloth	Hide	Parts List Publication Number
Front Seat Assembly, right hand	1	4G 3205	4G 2129	Pub. 1099, Seats, p. 4
Front Seat Assembly, left hand	1	4G 3206	4G 2130	
Front Seat Cushion Trim Covering Assembly, right hand	1	4G 9392	4G 7388	
Front Seat Cushion Trim Covering Assembly, left hand	1	4G 9393	4G 7389	
Front Squab Covering, right hand	1	4G 9394	4G 7390	
Front Squab Covering, left hand	1	4G 9395	4G 7391	
Front Seat Bench Type Cushion Covering Assembly	1	4G 3204	4G 3146	
Squab Covering Assembly	1	4G 9490	4G 8398	
	1	4G 9401	4G 8397	
Armrest Door Pull Assemblies	2	4G 3207	4G 2124	Pub. 1099, Casings, p. 3
Side Armrest Trim Covering Assembly	2	4G 9399	4G 7406	
Rear Squab Assembly	1	4G 3208	4G 2178	Pub. 1099, Seats, p. 5
Rear Squab Trim Covering Assembly	1	4G 9390	4G 7393	
Rear Cushion Assembly	1	4G 3209	4G 2179	
Rear Cushion Trim Covering Assembly	1	4G 9391	4G 7392	

FOR YOUR RECORDS	
	PARTS LISTS
	STOCK CARDS
	PARTS ORDERED
	ALTERATIONS NOTED

BOOT LID HANDLE AND LOCK

A 30

To conform with the new B.M.C. standard fixings, the boot lid handle with lock is now fitted with studs and nuts having U.N.F. thread instead of 2 BA.

INTERCHANGEABILITY

The new boot lid handle assembly with nuts can be used for replacement purposes, separate parts are not interchangeable.

SUMMARY OF ALTERATION

Description	Number Off	Old Part	New Part	Parts List Publication Number
Handle Assembly with lock and keys	1	14A 1642	14A 2849	A 30 Pub. 883B, Boot, p. 1 Pub. 883B/1, p. 15
Nuts for handle	2	2K 4012	FNZ 103	

FOR YOUR RECORDS	PARTS LISTS
	STOCK CARDS
	PARTS ORDERED
	ALTERATIONS NOTED

Published July 19, 1954

SIDE WINDOWS

Austin-Healey 100

New side windows of improved design are now being fitted; the lower half being made to open so that hand signals can be given when necessary.

INTERCHANGEABILITY

The new side windows can be used to replace their old counterparts, but should be supplied in pairs due to the difference in design.

SUMMARY OF ALTERATION

Description	Number Off	Old Part	New Part	Type and Parts List Publication Number
Side Window Assembly, right hand	1	14B 1872	14B 2849	Pub. 1050, Doors, p. 1
Side Window Assembly, left hand	1	14B 1878	14B 2850	
Side Window Frame, right hand	1	14B 1873	—	
Side Window Frame, left hand	1	14B 1879	—	
Side Window, right hand ($\frac{3}{16}$ perspex)	1	14B 1874	—	
Side Window, left hand ($\frac{3}{16}$ perspex)	1	14B 1880	—	
Glazing Rubbers	2	14B 1875	—	
Weatherstrips	2	14B 1876	—	
Fasteners (Tenax) bottom portion, fixed to door	2	—	14B 2464	
Nuts	2	—	FNZ 103	
Plain washers	2	—	PWZ 103	

FOR YOUR RECORDS	PARTS LISTS
	STOCK CARDS
	PARTS ORDERED
	ALTERATIONS NOTED

FACIA AND INSTRUMENT PANEL

Austin-Healey 100

A combined facia and instrument panel has been introduced for cars fitted with the non-adjustable steering gear. The new instrument panel is incorporated in the facia panel, instead of being a separate part as hitherto.

INTERCHANGEABILITY

The new combined facia and instrument panel is only interchangeable when fitted to cars with the non-adjustable steering gear.

SUMMARY OF ALTERATION

Type	Range	Plate	Description	Number per Vehicle	Austin Part Number	Parts List Publication Number
Austin-Healey 100	B.1001–1854		*Facia panel, R.H. Steering	1	14B 3542	Pub. 1050, Body Shell, p. 2
			*Facia panel, L.H. Steering	1	14B 3543	
			*Instrument control panel assembly (less instruments)	1	4B 2114	
			*Seal (plastic)	1	14B 2745	
			*Screws	8	53K 2636	
			*Spring washers	8	2K 1209	
	B.1855 on		Facia and instrument panel (less instruments) R.H. Steering	1	14B 2874	
			Facia and instrument panel (less instruments) L.H. Steering	1	14B 2875	

* Omitted from Parts List.

FOR YOUR RECORDS	PARTS LISTS
	STOCK CARDS
	PARTS ORDERED
	ALTERATIONS NOTED

Printed in England, September 20, 1954

REAR END ASSEMBLY

Austin-Healey 100

Further to the article appearing in this Journal, Volume 24, section "Suspension", page 8, introducing new rear springs, the rear end assembly, part number 4B 1041, has been modified to accept the new road springs.

INTERCHANGEABILITY

The new rear end assembly can be used for replacements of the old type.

SUMMARY OF ALTERATION

Type	Range	Plate	Description	Number per Vehicle	Austin Part Number	Parts List Publication Number
Austin-Healey 100	To B. 1952 . .		Rear end assembly . .	1	4B 1041	Pub. 1050, Body Shell, p. 1
	B. 1953 on . .		Rear end assembly . .	1	4B 1052	

CENTRE TUNNEL COVER PLATE

A 30

A cover plate has been introduced; this replaces the rubber plug over the transmission lubricating hole in the tunnel floor.

Two holes have been drilled and two nuts welded to the underside of the floor to accept new fixings.

INTERCHANGEABILITY

The new cover plate can be used to replace the plug, providing the tunnel floor is suitably drilled.

SUMMARY OF ALTERATION

Type	Range	Plate	Description	Number per Vehicle	Austin Part Number	Parts List Publication Number
A2S4 AS.4	To B. 22094 To B.407669		Plugs for centre tunnel .	*3	4G 1851	Pub. 883B/1, p. 17
A2S4 AS.4	B.22095 on . B.407670 on		Plugs for centre tunnel . Cover plate	2 1	4G 1851 14A 2876	

* Parts List should be amended to read 3.

FOR YOUR RECORDS	PARTS LISTS
	STOCK CARDS
	PARTS ORDERED
	ALTERATIONS NOTED

CAB SHELLS

A 40 Pick-Up

In future, the cab shell (Chassis range: R.H. Steering C.294001–583241, L.H. Steering C.294001 –583240) as fitted to the GQU.4, part number 4G 9380A, will be supplied to replace the original cab, part number 4G 2962A, as fitted to the GQU.2. When fitting the replacement cab, the following modifications to the scuttle and floor will be necessary.

1. Partly fill in the hole for the steering column to correspond in size with the existing steering column cover plate.
2. Drill a new hole in the scuttle above the old one for the brake cable, and plug the redundant hole.
3. Level up the brake pedal hole by partly filling in at the top and filing out the bottom, so that it will accommodate the rubber ferrule.
4. Open out the body centre floor to allow for the central direct gear change lever, and fit the original rubber cover.

NOTE: The old type wings and bonnet, as a complete assembly, can be used with the new type cab shell.

SUMMARY OF ALTERATION

Description	Number Off	Old Part	New Part	Type and Parts List Publication Number
Cab Shell, with doors	1	*4G 2962A	4G 9380A	A 40 Pub. 1099, Body Shell, p. 4

*Not previously listed. Add to Parts List.

FOR YOUR RECORDS	PARTS LISTS
	STOCK CARDS
	PARTS ORDERED
	ALTERATIONS NOTED

FLOORBOARDS

A 40 Van and Countryman

Metal front and rear outer floorboards have been introduced to replace the timber floorboards hitherto fitted on the Van. On the Countryman, only the rear outer floorboards have been replaced with metal ones. The inner floorboards on both models remaining as before. Also, the wood-screws securing the petrol filler protection cover are now replaced by self tapping screws.

INTERCHANGEABILITY

The new metal floorboards are not directly interchangeable with their old timber counter-parts.

SUMMARY OF ALTERATION

Type	Range	Plate	Description	Number per Vehicle	Austin Part Number	Parts List Publication Number
A 40 Van (GV.3 and GV.4)	To B.21330		Front Floor Assembly . .	1	4G 1123	Pub. 1099, Floor, p. 3
			Rear Floor Assembly . .	1	4G 1124	
			Front Floorboard, outer, right hand	1	4G 2413	
			Front Floorboard, outer, left hand	1	4G 2414	
			Rear Floorboard, outer, right hand	1	4G 9867	
			Rear Floorboard, outer, left hand	1	4G 2232	
			Self Tapping Screws . .	26	6K 9542	
	B.21331 on		Front Floor Assembly . .	1	4G 3217	
			Rear Floor Assembly . .	1	4G 3218	
			Front Floorboard, outer, right hand	1	14G 4572	
			Front Floorboard, outer, left hand	1	14G 4573	
			Rear Floorboard, outer, right hand	1	14G 4574	
			Rear Floorboard, outer, left hand	1	14G 4575	
			Self Tapping Screws . .	28	6K 9640	

Continued

FOR YOUR RECORDS	PARTS LISTS
	STOCK CARDS
	PARTS ORDERED
	ALTERATIONS NOTED

FLOORBOARDS—*continued*

SUMMARY OF ALTERATION—*continued*

Type	Range	Plate	Description	Number per Vehicle	Austin Part Number	Parts List Publication Number
A 40 Countryman (GP.3 and GP.4)	To B.8399		Rear Floor Assembly, outer, right hand	1	4G 2242	Pub. 1099, Floor, p. 3
			Rear Floor Assembly, outer, left hand	1	4G 2243	
			Self Tapping Screws . .	14	6K 9542	
	B.8400 on		Rear Floor Assembly, outer, right hand	1	4G 3082	
			Rear Floor Assembly, outer, left hand	1	4G 3083	
			Self Tapping Screws . .	14	6K 9640	
A 40 Countryman (GP.3 and GP.4)	To B.8399		Rear Floor Assembly . .	1	4G 1124	Pub. 1099, Floor, p. 4
	B.8400 on		Rear Floor Assembly . .	1	4G 3218	
A 40 Van (GV.3 and GV.4)	To B.21330		Woodscrews	5	*5C 58	Pub. 1909, Body Equipment, p. 8
	To B.8399					
A 40 Countryman (GP.3 and GP.4)	B.21331 on		Self Tapping Screws . .	5	6K 9473	
	B.8400 on					

* Not previously listed. Add after item 3 in Parts List.

BOOT LID

Austin-Healey 100

A new steel type boot lid is now being fitted in place of the aluminium type fitted hitherto. The part number, 4B 1039, remains unchanged. The steel boot lid is interchangeable with the aluminium one.

COMMENCING BODY NUMBER: 4129

REAR MUDWINGS

A 40 Somerset

Further to the article appearing in this Journal, Volume 24, section "Body", page 2, to facilitate assembly of the rear wings a nut retainer with nut has been added to the rear wheelarch panel, and a $\frac{5}{16}$" diameter hole in the rear wings has been replaced by a $\frac{7}{16}$" × $\frac{7}{8}$" slot.

INTERCHANGEABILITY

The new wings can be used to replace their old counterparts, providing the nut retainer and nut are also fitted to the rear wheelarch panel.

SUMMARY OF ALTERATION

Type	Range	Plate	Description	Number per Vehicle	Austin Part Number	Parts List Publication Number
A 40 (GS.4)	To B.100946 (Fixed roof) To B.101411 (Sliding roof)		Rear wing, right hand . .	1	4G 1292	Pub. 1099, Mudwings, p. 5
			Rear wing, left hand . .	1	4G 1293	
	B.100947 on (Fixed roof) B.101442 on (Sliding roof)		*Rear wing, right hand . .	1	4G 3080	
			*Rear wing, left hand . .	1	4G 3081	
	To B.100946 (Fixed roof) To B.101442 (Sliding roof)		Bolts to body	14	2K 9796	
			Screws to body	8	6K 9494	
	B.100947 on (Fixed roof) B.101442 on (Sliding roof)		Bolts to body	12	2K 3047	
			Screws to body	8	6K 9890	
	B.100947 on (Fixed roof) B.101442 on (Sliding roof)		*Anchor plates for bolts .	12	14G 956	
			*Bolts to body	2	2K 9930	
			*Plain washers	8	6K 9776	
			*Nuts	20	2K 3975	

* Not previously listed.

FOR YOUR RECORDS	PARTS LISTS
	STOCK CARDS
	PARTS ORDERED
	ALTERATIONS NOTED

REAR REFLECTORS

A 30, A 40, A 70, Austin-Healey 100

All vehicles are now being fitted with rear reflectors to comply with the new lighting regulations. The A 40/A 50 Cambridge does not require separate reflectors as a reflex reflector which complies with the new regulation is incorporated in the stop and tail lamp.

SUMMARY OF ALTERATION

Type	Range	Plate	Description	Number per Vehicle	Austin Part Number	Parts List Publication Number
A 30 A 40 A 70			Rear reflectors . .	2	2A 9001	Pub. 883B, Electrical, p. 5
			Screws, reflectors to body	2	PMZ 0308	Pub. 1099, Electrical, p. 28
			Nuts for screws .	2	FNZ 103	Pubs. 730, p. 57
			Washers for screws	2	2K 8232	853, p. 57
Austin-Healey 100			Rear reflectors . .	2	11G 9021	
			Mounting for right hand rear reflector	1	14B 3867	
			Mounting for left hand rear reflector	1	14B 3868	Pub. 1050, Electrical, p. 5
			Rubber slippers for mountings . .	2	14B 3869	
			Screws, mountings to body and reflectors to mounting	6	PMZ 0308	
			Spring washers .	6	2K 8232	

FOR YOUR RECORDS: PARTS LISTS; STOCK CARDS; PARTS ORDERED; ALTERATIONS NOTED

Published October 25, 1954

BATTERY ACCESS PANEL

Austin-Healey 100

The hinges of the battery access panel are now fixed with recessed head screws instead of spot-welding as hitherto. Additional screws and washers have been introduced to suit.

INTERCHANGEABILITY

The old and new type battery access panels are interchangeable, the new type hinge can be used to replace the old type providing the panel is suitably drilled.

SUMMARY OF ALTERATION

Type	Range	Plate	Description	Number per Vehicle	Austin Part Number	Parts List Publication Number
Austin-Healey 100	To B.3051		Battery access panel	1	4B 1232	Pub. 1050, Body Shell, p. 1
			Hinge	1	4G 2847	
			Recessed head screws	4	PMZ 0306	
			Nuts	4	FNZ 103	
			Plain washers	4	PWZ 103	
			Spring washers	4	LWZ 103	
	B.3052 on		Battery access panel	1	4B 1232	
			Hinge	1	14B 3500	
			Recessed head screws	4	PMZ 0306	
			Nuts	4	FNZ 103	
			Plain washers	4	PWZ 103	
			Spring washers	4	LWZ 103	
			Recessed head screws	4	51K 2636	
			Nuts	4	FNN 103	
			Plain washers	4	2K 1201	
			Spring washers	4	2K 1209	

FOR YOUR RECORDS	PARTS LISTS
	STOCK CARDS
	PARTS ORDERED
	ALTERATIONS NOTED

REAR SEAT CUSHION FIXING

A 40 Somerset

The fixing of the rear seat cushion has been improved by increasing the size of the holes in the seat pan and fitting larger diameter grommets.

INTERCHANGEABILITY

The new type grommet can only be used with the modified seat pan.

SUMMARY OF ALTERATION

Type	Range	Plate	Description	Number per Vehicle	Austin Part Number	Parts List Publication Number
A 40 (GS.4)	To B.780700		Grommets for rear cushion assembly	2	2H 1889	Pub. 1099, Seats, p. 5
	B.780701		Grommets for rear seat pan . . .	2	14G 3654	

FRONT END ASSEMBLY

Austin-Healey 100

Further to the article appearing in this Journal, Volume 24, section "Suspension", page 8 introducing new rear springs, the modifications to the floor panels has necessitated a change in part number for the front end assembly.

INTERCHANGEABILITY

The new front end assembly can be used for replacement of the old type.

SUMMARY OF ALTERATION

Type	Range	Plate	Description	Number per Vehicle	Austin Part Number	Parts List Publication Number
Austin-Healey 100	To B.1952		Front end assembly	1	4B 1040	Pub. 1050, Body Shell, p. 1
	B.1953 on		Front end assembly	1	4B 1051	

FOR YOUR RECORDS	PARTS LISTS
	STOCK CARDS
	PARTS ORDERED
	ALTERATIONS NOTED

FRONT END ASSEMBLY

Austin-Healey 100

New door hinges and check strap assemblies of improved design have been introduced to facilitate production. This has necessitated modifications to the door hinge pillars on the front end assembly and the hinge pillars on the doors.

INTERCHANGEABILITY

New and old parts are not interchangeable.

SUMMARY OF ALTERATION

Type	Range	Plate	Description	Number per Vehicle	Austin Part Number	Parts List Publication Number
Austin-Healey 100	B.1953–5000		Front end assembly	1	4B 1051	Pub. 1050, Body Shell, p. 1
	B.5001 on		Front end assembly	1	4B 1074	
	B.21–5000		Door shell, right hand	1	4B 1034	Pub. 1050, Doors, p. 1
			Door shell, left hand	1	4B 1035	
			Hinge, top, right hand	1	14B 1982	
			Hinge, top, left hand	1	14B 1983	
			Hinge, bottom, right hand	1	14B 1985	
			Hinge, bottom, left hand	1	14B 1986	
			Hinge pins	4	8D 768	
			Screws, hinges to doors, 1" long	12	51K 1228	
			Screws, hinges to doors, ¾" long	4	51K 1226	
			Screws, hinges to body	20	51K 1228	
			Screws, hinges to body	4	HBN 0408	
			Plain washers	4	PWN 104	
			Spring washers	4	2K 1210	
	B.5001 on		Door shell, right hand	1	4B 1075	
			Door shell, left hand	1	4B 1076	
			Door hinge leaves—door	2	14B 3730	
			Door hinge leaves—hinge pillar	2	14B 3731	
			Door hinge pins	2	14B 3732	
			Brass washers	8	2K 9020	
			Screws, 1" long	4	51K 1138	
			Screws, ¾" long	4	51K 1136	
			Screws, hinges to body	16	51K 1138	
	B.21–5000		Door check assembly, right hand	1	14B 1731	
			Door check assembly, left hand	1	14B 1732	
	B.5001 on		Door check assembly, right hand	1	14B 3733	
			Door check assembly, left hand	1	14B 3734	

FOR YOUR RECORDS	PARTS LISTS
	STOCK CARDS
	PARTS ORDERED
	ALTERATIONS NOTED

DOOR VENTILATING LOUVRES

A 30

Louvre catches of an improved design are now being fitted to the A 30 range of vehicles. A more positive locking location for the catch handle has been provided and the sealing between the louvre and frame is thus improved. The new catch handle is supplied in assembly form, due to the type of fastening (catch to bracket) used. The new assembly incorporates a coil type compression spring which replaces the original spring washer. This obviates any possibility of breakage due to excessive force being applied to the catch handle.

INTERCHANGEABILITY

The new and old louvre assemblies are interchangeable and retain their original part numbers. The detail parts of the catch handle assemblies are not interchangeable due to dimensional changes.

SUMMARY OF ALTERATION

Type	Range	Plate	Description	Number per Vehicle	Austin Part Number	Parts List Publication Number
AS.4	To B.407292		Louvre frame brackets .	4	14A 2776	Pubs. 883B/3, p. 8
A2S.4	To B.21655		Louvre frame brackets .	2	14A 2776	883B/1, p. 12
AV.4	To B.*		Louvre frame brackets .	2	14A 2776	883B/4, p. 12
AS.4	To B.407292		Catch handles, right hand .	2	14A 2778	Pub. 883B/3, p. 8
			Catch handles, left hand .	2	14A 2779	
			Catch handle fixing screws.	4	14A 2798	
			Spring washers	4	14A 2780	
A2S.4	To B.21655		Catch handle, right hand .	1	14A 2778	Pubs. 883B/1, p. 12 883B/4, p. 12
AV.4	To B.*		Catch handle, left hand .	1	14A 2779	
			Catch handle fixing screws.	2	14A 2798	
			Spring washers	2	14A 2780	
AS.4	B.407293 on		Catch handle and bracket assemblies, right hand .	2	14A 3599	Pub. 883B/3, p. 8
			Catch handle and bracket assemblies, left hand. .	2	14A 3600	
			Screws, brackets to louvres.	8	CMP 0203	
A2S.4	B.21656 on		Catch handle and bracket assembly, right hand .	1	14A 3599	Pubs. 883B/1, p. 12 883B/4, p. 12
AV.4	B.* on		Catch handle and bracket assembly, left hand . .	1	14A 3600	
			Screws, brackets to louvres	4	CMP 0203	

* To be published at a later date.

FOR YOUR RECORDS	PARTS LISTS
	STOCK CARDS
	PARTS ORDERED
	ALTERATIONS NOTED

Issue 13 *Printed in England, November 29, 1954*

LUGGAGE FLOOR

A 40

Further to the article appearing in this Journal, Volume 24, section "Body", page 2, the following instructions have been compiled in order to assist in the fitting of luggage floor assemblies to cars not so equipped.

1. Remove the boot lid and the spare wheel.
2. Petrol tank. Disconnect the petrol filler tube, breather tube, supply pipe and tank unit, and remove the tank.
3. Take out the rear seat cushion and squab, and cover the wheelarch casings with asbestos to prevent damage.
4. Remove both wheelarch stiffeners.
5. Weld the new type wheelarch stiffeners (G and H) in the position previously occupied by the old type; they should also be welded to the two edges of the bracket supports (I).

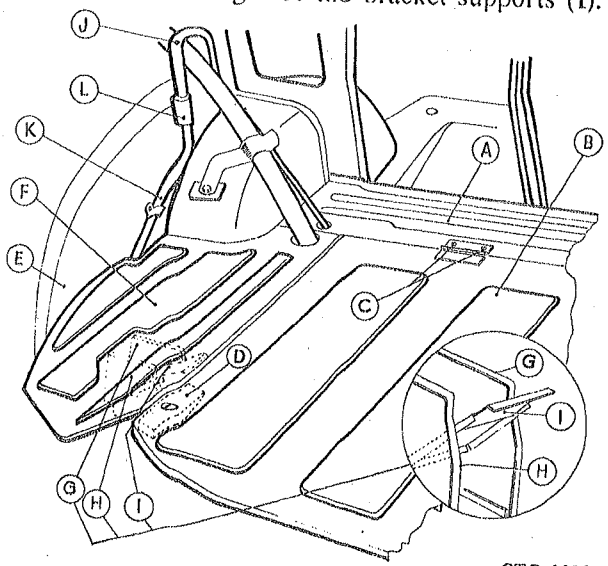

STR 1288

6. The two side panels and the back panel of the luggage floor assembly (F and A) should now be assembled in position in the boot, using drive screws to hold the side panels to the back panel.
7. Next assemble the luggage compartment floor B to the luggage floor support and check that the floor can be freely raised or lowered for access to the spare wheel without difficulty.
8. The floor support assembly A and the side panels F can now be welded together. After welding it is desirable to check that no distortion has taken place, to prevent the opening of the hinged floor.
9. Finally weld the floor assembly to the seat squab support bars and the side panels to the wheelarch panels, a tack weld approximately every 3" (76.2 mm.) on the wheelarch panels being sufficient.
10. Assemble the catches to the hinged floor and refit the rear seat, squab, petrol tank, spare wheel and boot lid.

A = Luggage floor support
B = Luggage floor
C = Hinge for floor
D = Catch
E = Tonneau assembly
F = Side support for floor
G = Stiffener, front
H = Stiffener, rear
I = Bracket support
J = Petrol tank air vent pipe, front
K = Petrol tank air vent pipe, rear
L = Rubber connection for vent pipes

TONNEAU COVER

Austin-Healey 100

A new tonneau cover assembly of improved design has been introduced. This is wider and has improved fastenings at the corners to ensure that there is no possibility of water entering the cockpit.

INTERCHANGEABILITY

The new tonneau cover is not interchangeable with the old one due to the fastenings being redesigned.

SUMMARY OF ALTERATION

Description	Number Off	Old Part	New Part	Parts List Publication Number
Tonneau cover assembly, R.H. Steering .	1	4B 2111	4B 2188	Pub. 1050, Hood, p. 1
Tonneau cover assembly, L.H. Steering .	1	4B 2133	4B 2189	

COMMENCING BODY NUMBER: 4606

FOR YOUR RECORDS	PARTS LISTS
	STOCK CARDS
	PARTS ORDERED
	ALTERATIONS NOTED

Issue 13

Published November 29, 1954

DRIVING MIRROR FIXING

Austin-Healey 100

To simplify the fitting of the driving mirror and to permit adjustment of the facia panel, the bonnet remote control and facia support bracket has been dispensed with in favour of two separate brackets, one for the facia and driving mirror, and the other for the bonnet remote control. The tapped plate for the driving mirror has been modified to be used in conjunction with the driving mirror attachment bracket.

INTERCHANGEABILITY

The new and old parts are not interchangeable.

SUMMARY OF ALTERATION

Description	Number Off	Old Part	New Part	Parts List Publication Number
Facia and driving mirror attachment bracket	1	—	14B 3572	
*Tapped plate driving mirror	1	14B 2511	14B 2511	
Bonnet remote control bracket	1	—	14B 3573	Pub. 1050, Body Shell, p. 2
*Bonnet remote control and facia support bracket	1	14B 2632	—	
*Screw	1	54K 2776	RMP0310	
*Nut	1	53K 325	FNZ 103	
*Plain washers	2	6K 9695	2K 9907	
*Spring washers	2	2K 1209	—	

*Not previously listed. Add to Parts List.

COMMENCING BODY NUMBER: 3800

FOR YOUR RECORDS	PARTS LISTS
	STOCK CARDS
	PARTS ORDERED
	ALTERATIONS NOTED

SIDE WINDOWS

Austin-Healey 100

The new side windows introduced in this Journal, Volume 24, section "Body", page 31, can now be serviced in "breakdown" form. All serviceable parts have been given separate part numbers and are itemised below.

SUMMARY OF ALTERATION

Type	Range	Plate	Description	Number per Vehicle	Austin Part Number	Parts List Publication Number
Austin-Healey 100			Side screen frame assembly, right hand	1	14B 3511	Pub. 1050, Doors, p. 1
			Side screen frame assembly, left hand	1	14B 3512	
			Fixing brackets, front	2	14B 3515	
			Nuts for fixing bracket	4	FNZ 103	
			Plain washers	4	PWZ 203	
			Fixing brackets, rear	2	14B 3516	
			Nuts for fixing bracket	4	FNZ 103	
			Plain washers	4	PWZ 203	
			Side screen cover assembly complete with side window and flap panels, right hand	1	14B 3540	
			Side screen cover assembly complete with side window and flap panels, left hand	1	14B 3541	
			Side window panels	2	14B 3505	
			Signalling flap panels	2	14B 3506	
			Fastener	1	14B 2465	
			Beadings, bottom rail	2	14B 3517	
			Fixing screws	8	14B 3509	
			Shouldered nipples	8	14B 3510	
			Beadings, front rail	2	14B 3518	
			Fixing screws	6	14B 3509	
			Shouldered nipples	6	14B 3510	
			Beadings, middle rail	2	14B 3519	
			Fixing screws	8	14B 3509	
			Shouldered nipples	8	14B 3510	
			Beading, main rail, right hand	1	14B 3520	
			Fixing screws	6	14B 3509	
			Shouldered nipples	6	14B 3510	
			Beading, main rail, left hand	1	14B 3521	
			Fixing screws	6	14B 3509	
			Shouldered nipples	6	14B 3510	

FOR YOUR RECORDS	PARTS LISTS
	STOCK CARDS
	PARTS ORDERED
	ALTERATIONS NOTED

Issue 13

Published November 29, 1954

HEATER INSTALLATION

A 30 Range, except AS.3

Due to numerous requests, this article has been compiled to assist in the installation of the A 30 heater. The following procedure should be adopted.

CONTROLS AND DEMISTER TO FACIA

1. Assemble the control lever unit (13) to the heater control bracket (9), using the two setscrews (14), spring washers (16) and nuts (15) Fig. C. Attach the demister and air control knobs (17 and 18) to their levers, Fig. C.

   NOTE: It is important to set the levers and knobs at the fully open position.

   Secure the two cables (19 and 20), for controlling the heater and demister, to the lever control unit, with the two clamps (22) and screws (23), Fig. C.

   Fix the assembly (1) Fig. A to the parcel shelf moulding, using the two setscrews (10), spring washers (12) and nuts (11), Fig. C.

2. Unbolt the windscreen pillar mouldings (3), one each side above facia panel, and facia panel (2), Fig. A.

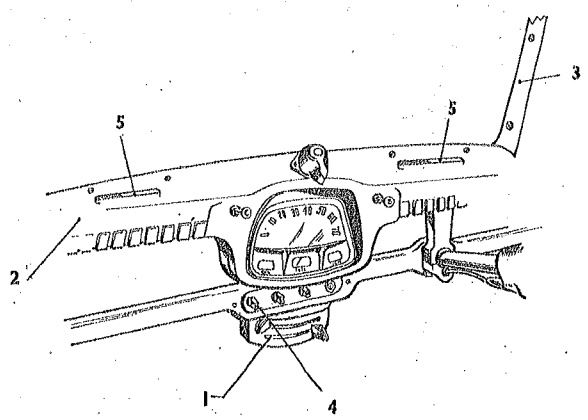

STR 1516

Fig. A

Disconnect the starter and choke cables (from engine side) and speedometer cables (from facia side), to enable the facia to be pulled away. Drill four suitably placed holes in the facia panel above the demister slots (5) Fig. A, and secure the two demister elbows (27) with the two self-tapping screws (29), Fig. C. Stick the two pieces of felt packing (28), Fig. C to the facia panel before securing the demister ducts (5), Fig. A in place. Dispense with the filler plug, disc and spire fix, as fitted in the switch panel for non-heater cars, and fit the heater switch (4) Fig. A and (35) Fig. C connecting it to the existing main harness.

DEMISTER HOSE TO BODY

1. Discard the plugs, fitted to non-heater cars, in dash panel (1) Fig. B, and fit the grommets (26) Fig. C. Thread the long flexible hose (demister) (24) into the right hand grommet, and the short flexible hose (demister) (25) into the left hand grommet, Fig. C. Stick the hoses to the demister ducts. After replacing the two plugs normally fitted in the dash, with the two grommets (21) pass the heater control cables (19 and 20) through. Fig. C.

2. Remove the cover plate from the dash panel at (2) Fig. B. Position the heater outlet deflector (4) complete with base seal (3) Fig. C into the slotted hole in the dash panel. Place the universal heater unit (1) Fig. C on the dash, in position as shown at (3) Fig. B. After securing the demister hoses (24 and 25) to the elbows at the rear of the heater fix the heater to the dash panel with the four screws, spring washers and plain washers.
   Connect the control cables (19 and 20) to the heater unit (1), using the two cable clamps and screws for the cable clamps, Fig. C.

Continued

HEATER INSTALLATION—*continued*

*3. Assemble the blower unit (5), together with the guard (8), rubber sleeve and clip (33 and 34), Fig. C, which connects the blower to the heater to dash panel and alongside the heater unit at (4), Fig. B. Secure with the two screws (6) and spring washers (7), Fig. C. Connect the flexible hose (30) with the hose clip (31) to the blower unit and flange on the bulkhead, and then clip the hose to the flitchplate with the fixing strap (32) Fig. C (which should be threaded into the bracket on the flitchplate).

*NOTE: Connect the lead (5) with tag, from blower to the existing Phillips headscrew, which retains the carburetter choke control cable, and the cable with the green and brown rubber sleeve from the blower unit to the green and brown stripped cable (from the wiper motor) (6), Fig. B.

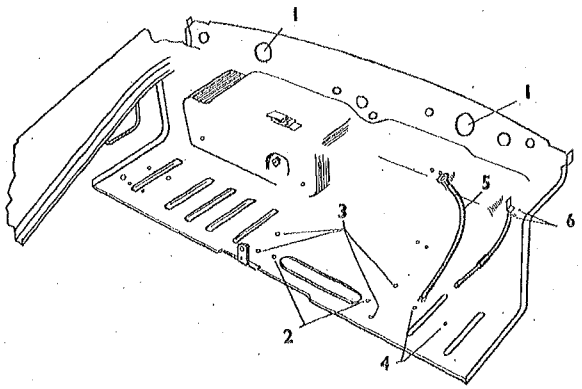

Fig. B STR 1517

HEATER UNIT, CONNECTIONS TO ENGINE

1. Drain radiator.
2. Remove the existing bottom hose, connecting the radiator to the water pump, and replace it with the rubber water connection with adaptor (36), Fig. C.
3. Secure the copper heater pipe, water pump to heater (37), with the existing bolts which retain the manifold to the engine side and the top of the manifold. Insert the front end (U bend) of the copper pipe (37) into the bottom radiator hose adaptor (36) and secure with one of the wire clips (42), Fig. C.
4. Replace the blanking plate on the cylinder head (rear, left hand side) with the water outlet pipe (39) and the joint washer (38), Fig. C using the original blanking plate bolts.
5. Fit the curved end of the rubber connection, water outlet pipe to heater (40), to the water outlet pipe (39), and fit the other end to the water valve (2) on the heater, securing the connection with the clips, one each end (42), Fig. C.
6. The remaining rubber connection (41) is fitted with the curved end to the outlet pipe at the top of the heater and the other end to the copper heater pipe (37) securing it with the two clips, one at each end (42), Fig. C.
7. After checking the installation to ensure correct fitment, refill the radiator, run the engine until a reasonable running temperature is attained.

NOTE: Check heater water system for any leaks.

Continued

HEATER INSTALLATION—*continued*

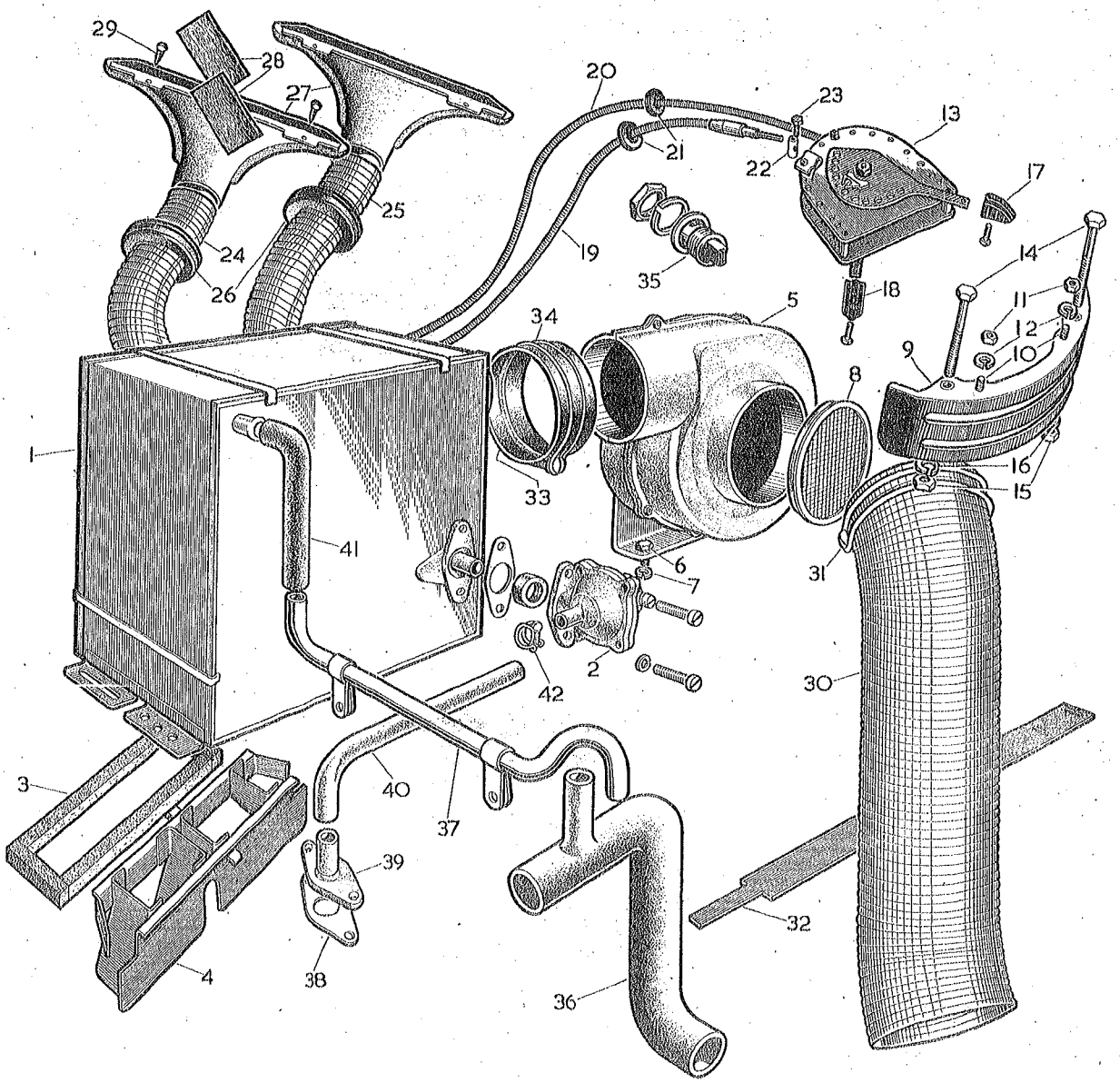

Fig. C

STR 1287A

Continued

HEATER INSTALLATION—*continued*

HEATER INSTALLATION SET—C4-107

Plate	Description	Number per Vehicle	Austin Part Number
C1	Heater unit	1	14A 2606
	Demister elbows, rubber	2	14G 3499
	Metal threads, heater to dash panel	4	HZS 0404
	Plain washers	2	PWZ 104
	Spring washers	4	LWN 204
C2	Water valve assembly	1	14G 900
	Drum and lever	1	14G 901
	Rubber diaphragm	1	14G 963
C3	Heater base seal	1	4B 9713
C4	Heater outlet deflector	1	14G 933
C5	Blower unit with guard	1	14A 2605
C6	Metal threads, blower fixing	2	HZS 0404
C7	Spring washers	2	LWN 204
C8	Guard for blower	1	4G 8612
C9	Heater control bracket	1	14A 175
C10	Bolts, bracket to parcel shelf moulding	2	53K 124
C11	Nuts	2	FNZ 103
C12	Spring washers	2	LWN 203
C13	Heater control lever unit, less knobs	1	14A 2604
C14	Bolts to heater control bracket	2	52K 134
C15	Nuts	2	FNZ 103
C16	Spring washers	2	LWN 203
C17	Knob, demister control	1	4G 8606
C18	Knob, air control	1	4G 8607
C19	Control cable, heater	1	14G 1709
C20	Control cable, demister	1	14G 1710
C21	Rubber grommets in dash for cables	2	3F 90
C22	Cable clamps	4	4G 8621
C23	Screws for clamps	4	14B 720
C24	Hose, demister, long	1	14A 2608
C25	Hose, demister, short	1	14A 2609
C26	Rubber grommets in dash for demister hoses	2	14A 2599
C27	Demister elbow assemblies	2	14A 1355
C28	Felt packings	4	6K 9363
C29	Self-tapping screws to facia panel	4	6K 9713
C30	Hose, front bulkhead to blower unit	1	14A 2612
C31	Clips for hose	2	14G 800
C32	Fixing strap for hose	1	14G 934
C33	Rubber sleeve, heater to blower	1	14A 2607
C34	Clip for sleeve	1	14G 799
C35	Heater switch	1	2A 449
C36	Rubber connection with adaptor, radiator to water pump	1	2A 245
	Clips, rubber, connection with adaptor	2	ALT-55
C37	Heater pipe (water pump to heater)	1	2A 444
C38	Joint washer for outlet pipe	1	2A 179
C39	Water outlet pipe on cylinder head	1	2A 441
C40	Rubber connection, water outlet, pipe to heater	1	1A 2973
C41	Rubber connection, heater pipe to copper pipe	1	1B 2357
C42	Wire clips	5	ALT-34

DRIVING COCKPIT

Austin-Healey 100

As a result of excessive heat being experienced in the driving cockpit in overseas territories, the following modifications have been carried out and proved successful. The salkaid floor insulation and underfelt has been extended to the edge of the floor and pedal boards, also the whole of the external surface of the pedal box has been covered with asbestos panels. The slots either side of the notch for the accelerator shaft have been sealed with a sealing compound. The spring clip securing the pipe, supply tank to master cylinder, has been replaced by a new clip secured to the pedal box by means of a screw, nut and washer.

A rubber heat deflector has been fitted to the gearbox cover extension panel, and is fixed with seven rivets, so that the lower edge of the deflector seats on top of the clutch housing. The gearbox cover is sealed with a section of sponge rubber secured with adhesive behind the gearbox cover extension panel. A sealing ring has also been fitted to the gear lever grommet.

Finally a longer air intake hose has been fitted with its forward end secured with a clip to the extreme right hand bolt of the radiator grille thereby drawing in a much greater volume of cold air.

INTERCHANGEABILITY

All the new parts can be fitted to existing models.

SUMMARY OF ALTERATION

Type	Range	Plate	Description	Number per Vehicle	Austin Part Number	Parts List Publication Number
Austin-Healey 100	B.21–5745		Asbestos covering, pedal box front, left hand, upper . .	1	*14B 2737	Pub. 1050 Floor Fittings, p. 1
			Asbestos covering, left hand pedal box, front left hand, lower	1	*14B 2739	
			Asbestos covering, pedal box, inner, left hand	1	*14B 2740	

* Not previously listed. Add to parts list.

Continued

FOR YOUR RECORDS	PARTS LISTS
	STOCK CARDS
	PARTS ORDERED
	ALTERATIONS NOTED

DRIVING COCKPIT—*continued*

SUMMARY OF ALTERATION—*continued*

Type	Range	Plate	Description	Number per Vehicle	Austin Part Number	Parts List Publication Number
Austin-Healey 100	B.21–5745		Underfelt, pedal box carpet, right hand front, R.H. Steering	1	*14B 2752	Pub. 1050 Floor Fittings (Carpets), p. 1
			Underfelt, pedal box carpet, left hand front, R.H. Steering	1	*14B 2753	
			Underfelt, pedal box carpet, right hand front, L.H. Steering	1	*14B 2731	
			Underfelt, pedal box carpet, left hand front, L.H. Steering	1	*14B 2732	
			Underfelt, front carpet, right hand	1	*14B 2722	
			Underfelt, front carpet, left hand	1	*14B 2723	
			Insulations, floor	2	*14B 2885	
	B.21 on		Asbestos covering, right hand pedal box, front, left hand, lower	1	*14B 2738	
	B.5746 on		Asbestos covering, pedal box front, left hand, upper	1	14B 3875	Pub. 1050 Floor Fittings, p. 1
			Asbestos covering, left hand, pedal box, front, left hand, lower	1	14B 3876	
			Asbestos covering, pedal box, inner left hand	1	14B 3877	
			Asbestos covering, pedal box, top left hand, front	1	14B 3878	
			Asbestos covering, pedal box, top left hand, rear	1	14B 3879	
			Screws for asbestos panels	14	PMZ 0310	
			Nuts	14	FNZ 103	
			Plain washers	14	53K 3151	
			Spring washers	14	LWN 203	

* Not previously listed. Add to parts list.

Continued

DRIVING COCKPIT—*continued*

SUMMARY OF ALTERATION—*continued*

Type	Range	Plate	Description	Number per Vehicle	Austin Part Number	Parts List Publication Number
Austin-Healey 100	B.5746 on		Heat deflector	1	14B 3789	Pub. 1050 Floor Fittings p. 1
			Rivets	7	2K 2342	
			Plain washers	7	PWZ 202	
			Sealing rubber	1	14B 3870	
			Underfelt, front carpet, right hand	1	14B 3880	Pub. 1050 Floor Fittings (Carpets), p. 1
			Underfelt, front carpet, left hand	1	14B 3881	
			Underfelt, pedal box carpet, right hand, front, R.H. Steering	1	14B 3882	
			Underfelt, pedal box carpet, left hand, front, R.H. Steering	1	14B 3883	
			Underfelt, pedal box carpet, right hand, front, L.H. Steering	1	14B 3884	
			Underfelt, pedal box carpet, left hand, front, L.H. Steering	1	14B 3885	
			Insulation, floor	1	14B 3886	
	B.21–5745		Flexible hose, air intake	1	14B 2749	Pub. 1050 Heater, p. 1
			Clip	1	14G 800	
	B.5746 on		Flexible hose, air intake	1	14B 3887	
			Clip	1	14B 3888	
	B.21 on		Grommets for outlet pipes through dash	2	2H 2816	
	B.5746 on		Sealing ring, gear lever grommet	1	14B 3889	Pub. 1050 Body Equipment, p. 1
	C.138031–219384		Spring clip for pipe	1	2K 8932	Pub. 1050 Brake Pipes, p. 1
	C.219385 on		Clip for pipe	1	3H 2879	
			Screw	1	PMZ 0308	
			Nut	1	FNZ 103	
			Plain washer	1	PWZ 103	

FRONT SEATS—REPOSITIONING

A 40 (GS.5), A 50 (HS.5)

The front seats are now secured to brackets welded to the floor, to give increased leg room to the extent of approximately $1\frac{3}{8}$" (34.924 mm). Front seats of cars manufactured prior to this modification can be repositioned by fitting a conversion set of parts, obtainable by quoting part number 38G 248, as follows.

Method of Conversion:—

1. Release the seat frame brackets by removing their fixing screws and spring washers from the body floor at A, the screws and spring washers can be utilized for blanking off the redundant holes at B.

2. Remove the seat and detach the brackets from the seat frame. Refit the brackets in the reverse position as shown at C. Ensure that the lips of the brackets are closed together as tightly as possible to avoid springing.

3. Unfasten the carpet and underfelt to give access to the depressions in the body floor.

4. Place the seat support brackets D, provided in the conversion set, in the floor depressions so that the welded bolts of each bracket are in line with the holes A used for securing the seat frame brackets in the original position.

5. When the brackets are in position, drill two $\frac{1}{4}$" diameter holes E in each of the side members of each bracket, approximately $\frac{5}{8}$" from each end, and continue through the body floor at F.

6. Fix the brackets to the body floor by means of the bolts, nuts, plain and spring washers provided as shown in inset G.

7. Refit the carpet and underfelt, cutting away material to accommodate the new brackets and removing the carpet fasteners which will not be required.

8. Replace the seat, fitting the seat frame brackets C on to the welded bolts H in the seat support brackets D and secure with the nuts, plain and spring washers provided as shown in inset K.

The average time taken for this conversion is 2 hours.

COMMENCING BODY NO.:—6651

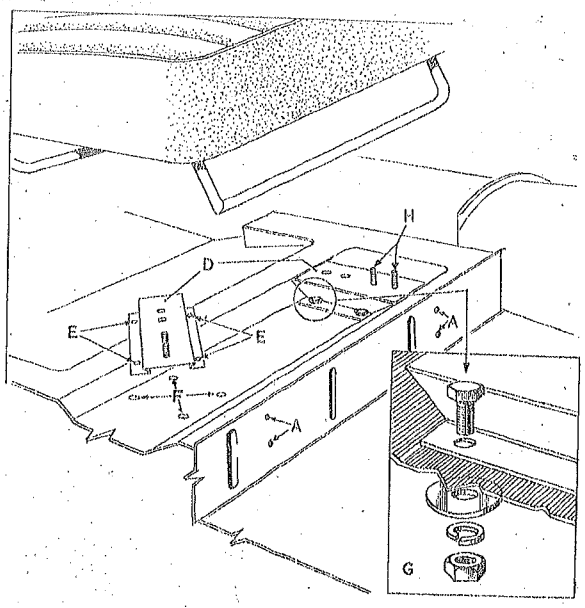

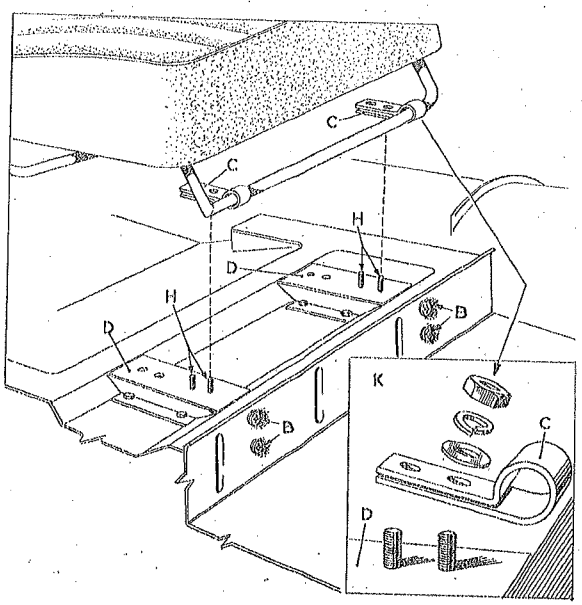

STR 1514

HEATER

A30

An alternative heater of smaller capacity and of modified design is being fitted to the A30 range of vehicles, with the exception of the AS.3. The new heater is designed to re-circulate the air in the interior of the vehicle and also to demist the windscreen.

INTERCHANGEABILITY

An installation kit of parts is available and may be obtained by quoting part number 28G 50. Fitting instructions for this installation are published in this Journal.

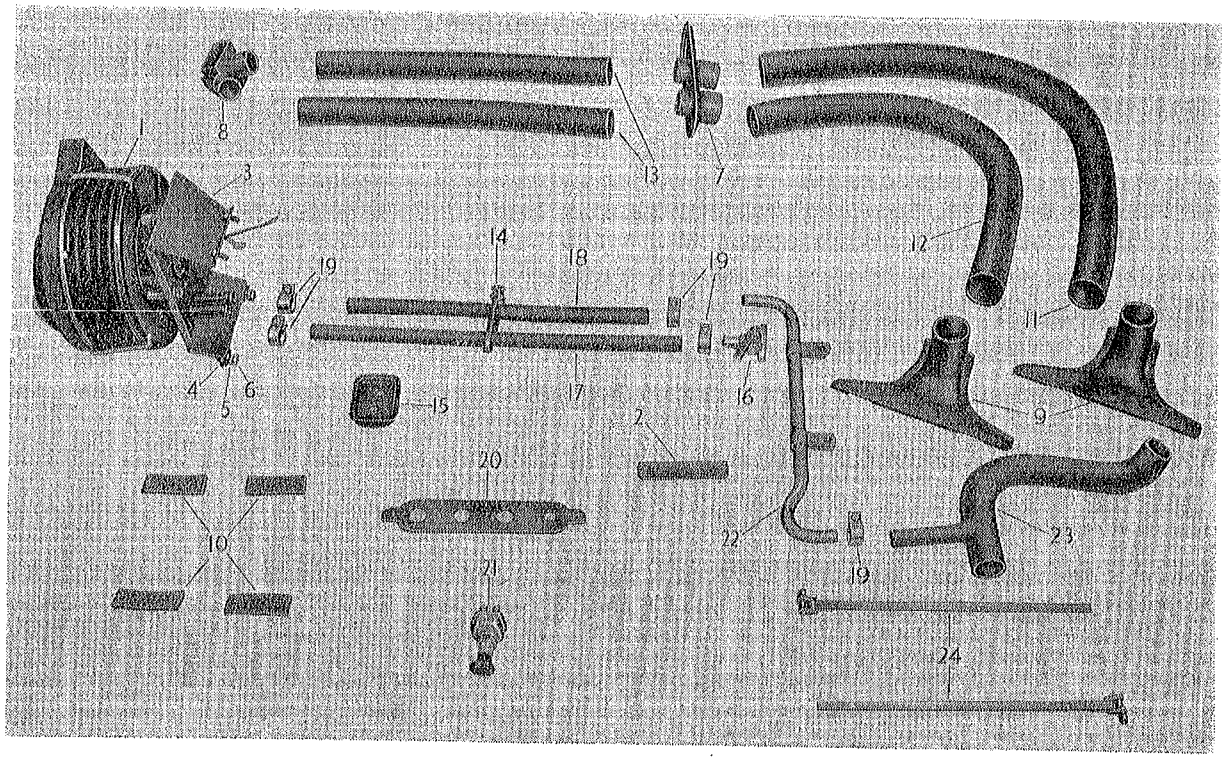

STR. 1528

Continued

FOR YOUR RECORDS	PARTS LISTS
	STOCK CARDS
	PARTS ORDERED
	ALTERATIONS NOTED

Printed in England, January 24, 1955

HEATER—*continued*

1. Commence by draining the cooling system.
2. Remove the small blanking plate, which is located on the rear of the cylinder head on the off side.
3. Fit the new heater tap (16) and the new joint washer.
4. Remove the radiator bottom hose and fit the new rubber connection with adaptor (23), secure with clips (24).
5. Fit the copper pipe (22), water pump to heater to the cylinder head, securing with two manifold retaining bolts.
6. Connect the copper pipe (22) to the adaptor, using one clip (19) to secure it.
7. Cut away the blanking plate which is welded to the underside of the dash panel; great care should be taken when removing this plate to avoid damage to the dash panel.
8. Fit the rubber grommet (15) and pass the two rubber connections (17) and (18) through this grommet.
9. Secure the rubber connection (17) to the heater tap with one clip (19).
10. Secure the rubber connection (18) to the copper pipe with one clip (19).
11. Replace the heater blanking plate with the new heater cover (7).
12. Assemble the heater unit (1) to the fixing bracket (3).
13. Remove the Bostick filler from the two $\frac{1}{4}$" diameter holes which are drilled in the dash panel.
14. Using two screws (4), spring washers (5) and nuts (6) fix the lower end of the heater fixing bracket to the underside of the panel.
15. Drill two $\frac{1}{4}$" diameter holes in the parcel tray to correspond with the holes in the upper end of the heater fixing bracket. These holes are already drilled in later type A 30 vehicles.
16. Secure the upper end of the heater fixing bracket to the parcel tray, using the same fixings as above.
17. The two short pieces of flexible hose should be fitted to the demister "Y" piece (8).
18. Fit the "Y" piece to the heater unit and the others ends of the hoses to the adaptors in the heater cover.
19. Fix the rubber hose connections to the heater pipes with two clips (19).
20. Remove the facia panel, taking care to release the following: speedometer, choke control cable and the starter cable.
21. Fit the demister elbows to the underside of the facia panel using self-tapping screws (53K 2992).
22. Secure with adhesive, the felt packing pieces (10) to the demister elbows.
23. Fit the two rubber grommets (14A 2599) into the holes in the dash panel and thread the two lengths of flexible hose (11) and (12) through them.
24. The hose may now be fitted over the demister elbows at one end and over the adaptors in the heater cover at the other.
25. Refit the facia panel.
26. Remove the switch panel from the facia panel and replace it by using the new switch panel (20) fitted with the heater rheostat switch (21).
27. Connect the existing heater wires to this switch.
28. The wire from the heater unit may be passed through two small rubber grommets in the dash panel.
29. Connect the wire fitted with a "bullet" type snap connector to the green coloured wire which emerges from the wiring harness at the windscreen wiper motor connections.
30. Earth the other wire to the dash panel using one of the screws in the choke control cable clip.
31. Secure the instruction label (2) to the dash panel in a prominent position.
32. Slowly re-fill the radiator to prevent an air-lock forming in the heater system.
33. Start and run the engine until a reasonable running temperature is attained.
34. Re-check all hose connections for water leaks.
35. If anti-freeze is added to the cooling system all water connectors should be doubly checked as anti-freeze has a "serching" action on all joints.
36. The heater switch is of the rheostat type and varies the speed of the heater motor.
37. This in conjunction with the two flaps fitted to the heater unit, are the only controls provided.
38. The hot water circulation may be cut off by setting the water tap, on the cylinder head, to the "off" position.

Continued

HEATER—*continued*

HEATER INSTALLATION KIT — 28G 50

Type	Range	Plate	Description	Number per Vehicle	Austin Part Number	Parts List Publication Number
		1	Car heater (5 airway)	1	14A 3490	
		2	Instruction label	1	4G 6826	
			Self tapping screws	2	53K 3301	
		3	Heater fixing bracket	1	14A 3491	
		4	Screws	4	HPZ 0404	
		5	Spring washers	8	LWZ 204	
		6	Nuts	4	FNZ 104	
		7	Heater cover	1	14A 2415	
			Screws	2	PMZ 0305	
			Spring washers	2	LWN 203	
		8	Demister "Y" piece	1	14A 152	
			Self tapping screws	1	53K 2992	
		9	Demister elbows	2	14A 1355	
		10	Felt packings for elbows	4	6K 9363	
	A2S.4		Self tapping screws	4	6K 9713	
	B.30079 on	11	Flexible hose	1	14A 3493	
	AS. 4.	12	Flexible hose	1	14A 3494	
	B.418089 on	13	Flexible hoses	2	14A 3495	
	A.V.4	14	Clip	1	14A 3496	Pubs.
A 30	B.1182 on	15	Grommet	1	14A 3509	883B/1, p.20
	AP.4		Grommets	2	14A 2599	883B/3, p.15
	B*	16	Heater tap	1	2A 524	883B/4, p.20
			Washer for tap	1	2A 179	
		17	Rubber connection, heater tap to heater	1	1H 308	
		18	Rubber connection, copper pipe to heater	1	1H 401	
		19	Clips for hoses	5	8G 531	
		20	Switch panel	1	14A 3480	
		21	Rheostat switch	1	4K 5887	
		22	Copper pipe, water pump to heater	1	2A 444	
		23	Rubber connector with adaptor, radiator to water pump	1	2A 245	
		24	Clips for rubber connection with adaptor	2	8G 550	

* To be published at a later date.

BATTERY FIXING

A30

The method of retaining the battery has been modified to provide a more positive clamping action. This prevents any tendency for the battery to work loose even after a considerable mileage has been covered.

INTERCHANGEABILITY

The old and new parts are not interchangeable.

SUMMARY OF ALTERATION

Type	Range	Plate	Description	Number per Vehicle	Austin Part Number	Parts List Publication Number
A2S.4 AS.4	To B.19529 To B.405854		Battery fixing strap . . . Rubber strips for battery strap . . . . . Rubber strips, battery to dash . . . . Screws to dash . . . Plain washers . . .	1 2 2 2 2	14A 369 14A 868 14A 2836 *51K 2018 *6K 9107	Pubs. 883B/1, p. 22 883B/3 p. 16
A2S.4 AS.4	B.19530 on B.405855 on		Battery fixing strap assembly Packing piece, battery to dash . . . . Packing piece, battery to tray . . . . Screws fixing strap assembly to dash . . . Plain washers . . .	1 1 1 2 2	14A 215 14A 2867 14A 2868 51K 2018 6K 9107	

* Not previously listed on AS.4. To be added to Parts List.

FOR YOUR RECORDS	PARTS LISTS
	STOCK CARDS
	PARTS ORDERED
	ALTERATIONS NOTED

TELESCOPIC BONNET PROP ROD

A40/A50

A new type of telescopic bonnet prop rod, with a safety device, has been introduced. This operates as follows:—

Release the bonnet safety catch, lift the bonnet to its full extent, when the prop rod will automatically become rigid. The safety device incorporated in the prop rod assembly will prevent any accidental closing of the bonnet.

To close the bonnet, lift the safety catch (1) to the raised position, then lift the bonnet to extend the inner slide (2) to its full extent in the prop rod channel (3), lower the bonnet and release the safety catch.

INTERCHANGEABILITY

Due to the difficulties of securing the new bonnet prop rod to cars prior to Body 6513 the new bonnet prop rod is not interchangeable with the old one.

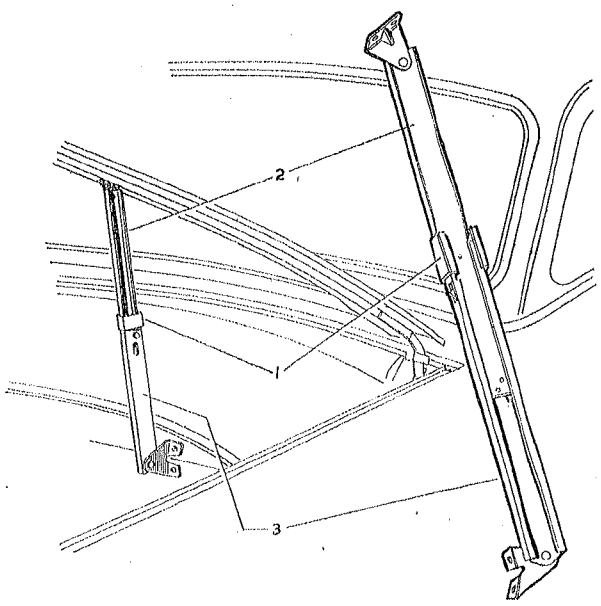

STR 1526

SUMMARY OF ALTERATION

Type	Range	Plate	Description	Number per Vehicle	Austin Part Number	Parts List Publication Number
A 40 (GS.5) A 50 (HS.5)	To B.6512		Prop rod assembly . .	1	4G 3033	Pub. 1099A Bonnet, p. 1
			Pivot plate, bonnet prop rod	1	14G 2417	
			Clip	1	14G 2418	
			Screws, for pivot plate and pin	2	6K 9473	
			Screw, for bonnet prop rod	1	PMN 0306	
			Shakeproof washer . .	1	2K 8609	
			Plain washer . . .	1	2K 9518	
			Ferrule	1	2H 1046	
			Split pin	1	CPS 0206	
	B.6513 on		Telescopic bonnet prop rod assembly . . .	1	14G 5927	
			Screws, attaching prop rod .	4	PMZ 0306	
			Shakeproof washers . .	4	2K 8232	

BRAKE SHOE RETURN SPRINGS

A 40, A 70

It has come to our knowledge that certain Factors are supplying front brake shoe springs for A 40 and A 70 vehicles and are claiming that the fitting of these springs will cure brake squeak. The springs are similar in form to the genuine Austin springs but have a galvanised finish.

The claim to eliminate brake squeak is not substantiated by tests, and furthermore the material was found to be inferior, so much so that after a number of brake applications the springs adopted a permanent "set". This would ultimately prevent the brake shoes returning to the "off" position.

The fitting of these inferior and spurious brake shoe return springs is not approved by the Company, and would be an infringement of the Warranty.

BRAKE FLUID

A 30, A 125, A 135

A new colourless brake fluid is now available in tins labelled S.A.E. Spec. 70 R2. The new fluid can be used to top up or to replace either the "Orange Fluid" No. 5, or the "Special" No. 5 fluid used in certain overseas territories, already in the braking system.

It is important that this Genuine Lockheed Fluid is used, otherwise correct operation of the brakes and the life of the internal parts will be impaired.

Issue 2 *Printed in England, February 15, 1954*

HANDBRAKE LEVER

Austin-Healey 100

A new handbrake lever assembly has been introduced to increase the operating clearance between the handbrake lever and the propeller shaft tunnel. The new lever is identical with the old one except for a longer fulcrum pin on the lever and a longer boss on the ratchet plate—see illustrations for comparison. Longer fixing screws are used to secure the new handbrake in conjunction with two distance pieces ($\frac{3}{8}$" (9.52 mm.) long), which fit between the ratchet plate and the body.

INTERCHANGEABILITY

The new handbrake assembly, together with the longer screws and the distance pieces, can be used to replace the old one. The handbrake lever ratchet plates are not interchangeable.

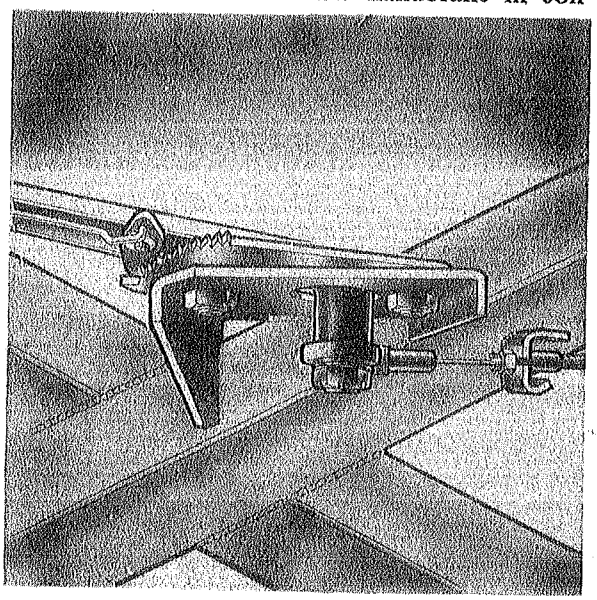

Old arrangement *STR 1281*

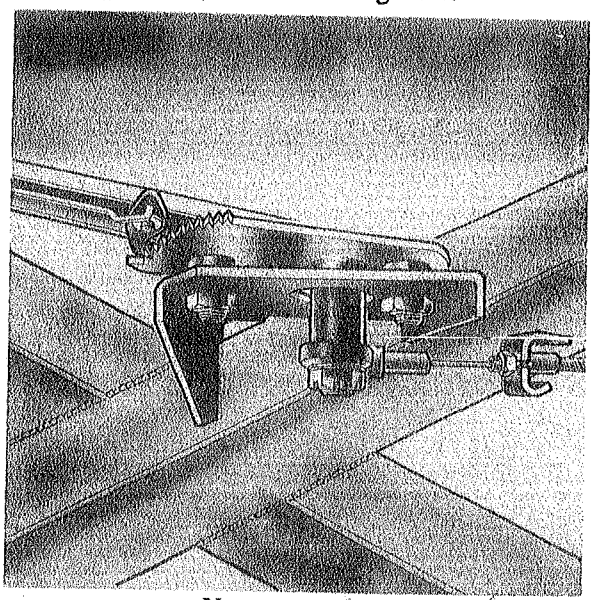

New arrangement *STR 1282*

SUMMARY OF ALTERATION

Description	Number Off	Old Part	New Part	Type
Handbrake Lever Assembly . .	1	1B 8769	1B 8893	Austin-Healey 100
Setscrews to body	2	1B 8859	1B 8895	
Distance Pieces, lever to body . .	2	—	1B 8896	
Ratchet Plate with boss	1	7H 5925	7H 5926	

COMMENCING CHASSIS NUMBERS:—

R.H. Steering – – 149950 : L.H. Steering – – 149903

FOR YOUR RECORDS	PARTS LISTS
	STOCK CARDS
	PARTS ORDERED
	ALTERATIONS NOTED

BRAKE SHOE FITTING

A 30

Occasional reports of faulty brake action on A 30 cars have been traced to incorrect assembly of the brake shoes. It is possible to assemble the brake shoes back to front, therefore care must be taken, when relining brakes or refitting brake shoes for any other reason, that the shoes are fitted correctly. It will be seen that the brake linings do not entirely cover the face of the brake shoe, and that one end of the shoe is left uncovered. On the front brakes, the unlined end A of each shoe must lie adjacent to the piston B which operates that particular shoe—see Fig. 1. The rear brakes are similarly arranged with the unlined end A of the top brake shoe adjacent to the expander unit C, and the unlined end A of the bottom shoe adjacent to the abutment pad D—see Fig. 2.

The rotational direction of the brake drum for forward movement of the car is indicated on both Fig. 1 and Fig. 2 by the arrow R. The semi-circular cut-out E (Fig. 1) only appears on left hand brake backplates, both front and rear, and is for identification purposes.

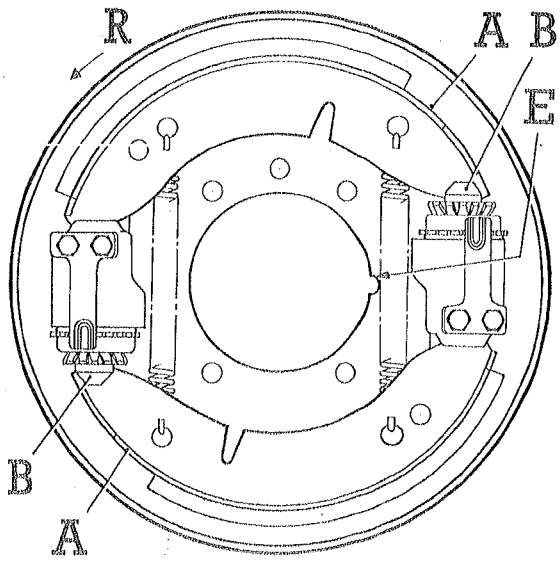

Fig. 1 *STR 1289*

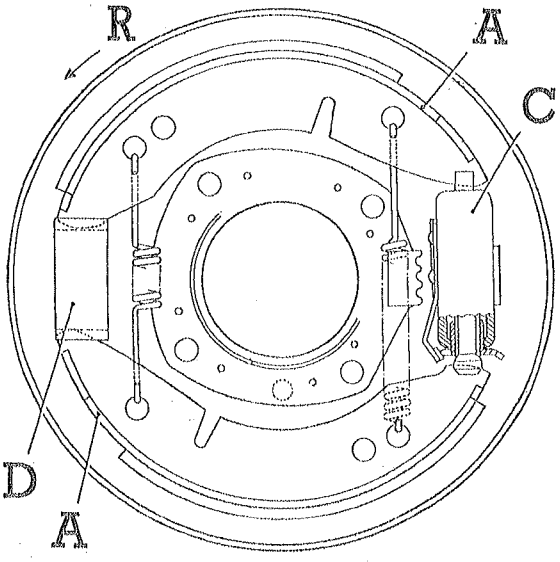

Fig. 2 *STR 1290*

FOR YOUR RECORDS	PARTS LISTS
	STOCK CARDS
	PARTS ORDERED
	ALTERATIONS NOTED

BRAKE DRUMS

A 30

The possibility of water entering the brake drums through the brake adjustment holes has now been completely eliminated by fitting rubber plugs in the holes. To do this, the holes which were previously elongated as shown at A, are now drilled to the same diameter B as the corresponding holes in the road wheels (Fig. 1). The rubber plug C, when fitted, seals the holes in both the road wheel and the brake drum and must not be inserted until the road wheel is properly fixed in place and the wheel nuts tightened (Fig. 2).

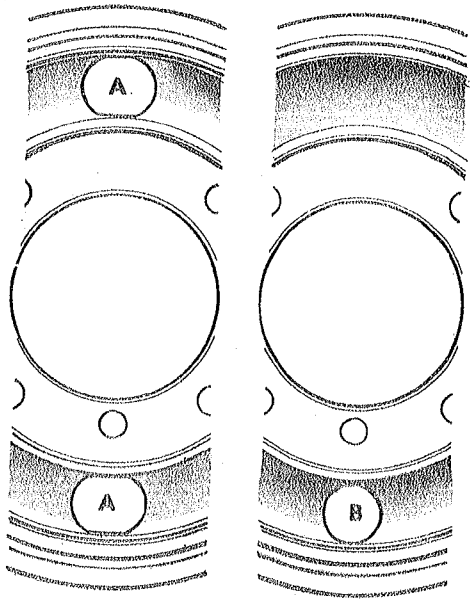

Fig. 1 *STR 1332*

There is now only one adjustment hole in each brake drum, therefore, when adjusting the brakes the wheel must be rotated to attend to each adjuster in turn.

INTERCHANGEABILITY

The modified brake drum with rubber plug, part number 2A 7228, is directly interchangeable with the old brake drum: the part number of the brake drum remains unchanged.

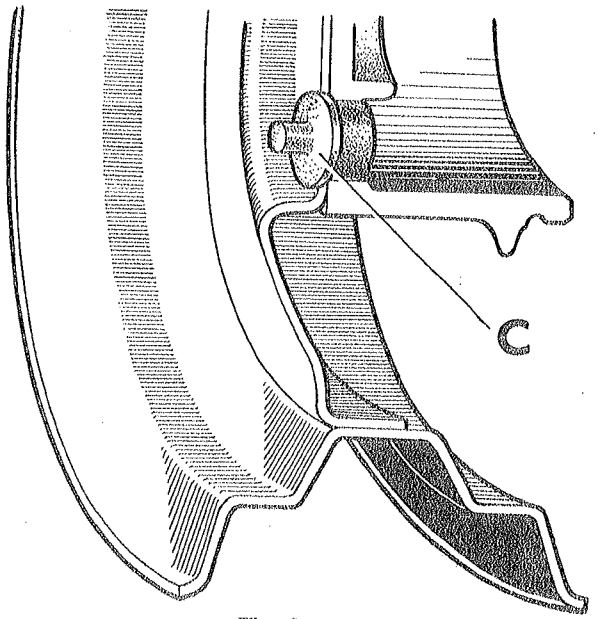

Fig. 2 *STR 1333*

COMMENCING CHASSIS NUMBERS:—

AS.4,	R.H. Steering	– –	40979
	L.H. Steering	– –	42286
A2S.4,	R.H. Steering	– –	40505
	L.H. Steering	– –	40518

FOR YOUR RECORDS	PARTS LISTS
	STOCK CARDS
	PARTS ORDERED
	ALTERATIONS NOTED

FRONT BRAKES

A 30

To facilitate manufacture and assembly the wheel cylinder bodies and the bridge pipes have been slightly modified.

INTERCHANGEABILITY

The new wheel cylinder assemblies, wheel cylinder bodies and brake bridge pipes can be used separately to replace their old counterparts.

SUMMARY OF ALTERATION

Type	Range	Plate	Description	Number per Vehicle	Austin Part Number	Parts List Publication Number
A 30	C.101-56281	FB3	Front Wheel Cylinder Assemblies, right hand	2	7H 7497	Pub. 883B, Front Suspension, p. 3
			Front Wheel Cylinder Assemblies, left hand	2	7H 7498	
			Cylinder Bodies, right hand	2	7H 7499	
			Cylinder Bodies, left hand	2	7H 7500	
	C.56282 on		Front Wheel Cylinder Assemblies, right hand	2	7H 7802	
			Front Wheel Cylinder Assemblies, left hand	2	7H 7803	
			Cylinder Bodies, right hand	2	7H 7804	
			Cylinder Bodies, left hand	2	7H 7805	
	C.101-56281	FB6	Bridge Pipe, front wheel cylinders, right hand	1	7H 7525	Pub. 883B, Brake Pipes, p. 1
			Bridge Pipe, front wheel cylinders, left hand	1	7H 7526	
	C.56282 on		Bridge Pipe, front wheel cylinders, right hand brake	1	7H 7806	
			Bridge Pipe, front wheel cylinders, left hand brake	1	7H 7807	

FOR YOUR RECORDS	PARTS LISTS
	STOCK CARDS
	PARTS ORDERED
	ALTERATIONS NOTED

Issue 7

Published July 19, 1954

ALFIN BRAKE DRUMS

Austin-Healey '100'

The alfin brake drums, which are available as an optional extra, have been replaced by ones of improved design. The new drums have lateral cooling fins instead of annular grooves around the circumference of the drum. The new alfin brake drums, part number 7H 1825, are of particular benefit when the car is to be driven hard or raced. They should be fitted in pairs, either front or rear to preserve even expansion of the brake drums as they become heated in use.

INTERCHANGEABILITY

The new alfin brake drums, part number 7H 1825, can be used in pairs to replace the earlier drums, part number 7H 1719.

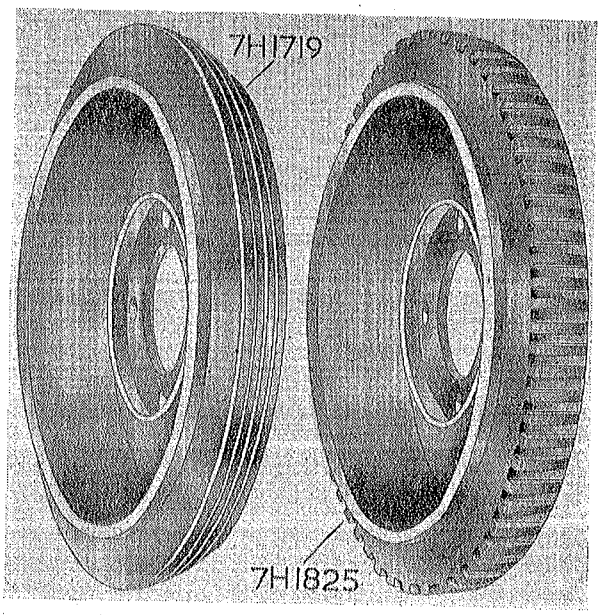

STR 1525

FOR YOUR RECORDS	PARTS LISTS
	STOCK CARDS
	PARTS ORDERED
	ALTERATIONS NOTED

BRAKE PIPES

Austin-Healey 100

New brake pipes having U.N.F. tube nuts have been introduced. The tube nuts on the new pipes have slightly smaller hexagons than the old ones. They are interchangeable separately with the original pipes which had A.N.F. threaded nuts.

INTERCHANGEABILITY

The new pipes will be supplied for replacements of the old ones.

SUMMARY OF ALTERATION

Type	Range	Plate	Description	Number per Vehicle	Austin Part Number	Parts List Publication Number
Austin-Healey 100	C.138031–156813		Flexible Brake Hoses	3	1B 8874	Pub. 1050, Brake Pipes, p. 1
			Nuts for hoses	3	6K 31	
			Brake Pipe, 5-way connection to right hand front brake house	1	1B 8862	
			Brake Pipe, 5-way connection to left hand rear brake hose	1	1B 8864	
			5-way Connection	1	1B 8875	
			Brake Pipe, master cylinder to 5-way connection, R.H. Steering	1	1B 8860	
			Brake Pipe, master cylinder to 5-way connection, L.H. Steering	1	1B 8870	
			Brake Pipe, supply tank to master cylinder, R.H. Steering	1	1B 8868	
			Brake Pipe, supply tank to master cylinder, L.H. Steering	1	1B 8872	
			Brake Pipe, 5-way connection to rear brake hose	1	1B 8866	
			3-way connection on rear axle for brake pipes	1	3H 1873	
			Brake Pipe, 3-way connection on axle to right hand brake	1	1G 7355	
			Brake Pipe, 3-way connection on axle to left hand brake	1	1G 7357	

Continued

FOR YOUR RECORDS	PARTS LISTS
	STOCK CARDS
	PARTS ORDERED
	ALTERATIONS NOTED

BRAKE PIPES—*continued*

SUMMARY OF ALTERATION—*continued*

Type	Range	Plate	Description	Number per Vehicle	Austin Part Number	Parts List Publication Number
Austin-Healey 100	C.156814 on		Flexible Brake Hoses	3	2A 7227	Pub. 1050, Brake Pipes, p. 1
			Nuts for hoses	3	FNZ 106	
			*Locking Plate, rear hose to bracket	1	1B 8965	
			Brake Pipe with nuts, 5-way connection to right hand front brake hose	1	1B 8920	
			Brake Pipe with nuts, 5-way connection to left hand front brake hose	1	1B 8921	
			5-way Connection	1	1B 8926	
			Brake Pipe with nuts, master cylinder to 5-way connection, R.H. Steering	1	1B 8919	
			Brake Pipe with nuts, master cylinder to 5-way connection, L.H. Steering	1	1B 8924	
			Brake Pipe with nuts, supply tank to master cylinder, R.H. Steering	1	1B 8923	
			Brake Pipe with nuts, supply tank to master cylinder, L.H. Steering	1	1B 8925	
			Brake Pipe with nuts, 5-way connection to rear brake hose	1	1B 8922	
			3-way connection on rear axle for brake pipes	1	2A 5346	
			Brake Pipe with nuts, 3-way connection on axle to right hand brake	1	1B 7396	
			Brake Pipe with nuts, 3-way connection on axle to left hand brake	1	1B 7397	
	C.1308031–156813		Master Cylinder Assembly with screwed push rod	1	3H 1842	Pub. 1010, Controls, p. 4
			Supply Tank	1	3H 920	
	C.156814 on		Master Cylinder Assembly with screwed push rod	1	1B 8927	
			Supply Tank	1	1G 9501	

*Not previously listed.

CLUTCH WITHDRAWAL HOUSING

16-H.P. Taxi and Hire-Car

To improve the lubrication of the bakelite thrust buttons on the clutch withdrawal fork, two oil holes A, $\frac{1}{16}$" (1.5873 mm.) diameter, are now drilled in the clutch withdrawal housing adjacent to the thrust button faces, see illustration. This modification can be adopted, if desired, on earlier type vehicles. Should it be necessary to renew the clutch withdrawal bearing, then this would be a convenient time to carry out this modification.

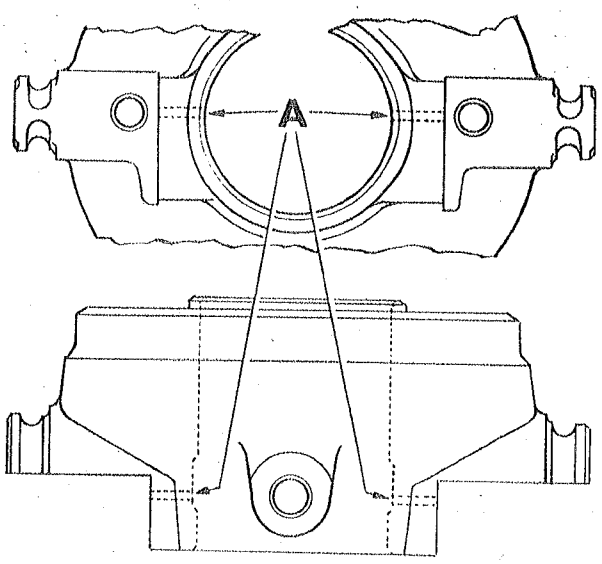

STR 1392

COMMENCING CHASSIS NUMBERS :—

Taxi – – 155763
Hire-Car – – 155746

CLUTCH DRIVEN PLATES

In the interests of both supply and demand clutch driven plates have been standardised wherever possible, thus reducing considerably the number of driven plates required to service post war vehicles. For simplicity these relate to clutch sizes and not to individual types of vehicles. The standardised driven plates will be supplied in place of the old type when stocks have been exhausted.

Size	Description	Old Part	New Part
6¼″	Driven plate . . .	7H 3077 7H 3186	7H 3201
7¼″	Driven plate . . .	7H 3055 7H 3086 7H 3113 7H 3093	7H 3086
8″	Driven plate . . .	7H 3056 7H 3084 7H 3090 7H 3087 7H 3094	7H 3223
9″	Driven plate—1″ spline . .	7H 3130	7H 3225
	Driven plate—1⅛″ spline .	7H 3143 7H 3173	7H 3204
	Driven plate—1⅛″ spline .	7H 3134 7H 3144	7H 3224
10″	Driven plate . . .	7H 3101 7H 3152 7H 3137	7H 3237
11″	Driven plate . . .	7H 3118 7H 3158 7H 3142 7H 3148 7H 3126 7H 3128	7H 3192

FOR YOUR RECORDS	PARTS LISTS
	STOCK CARDS
	PARTS ORDERED
	ALTERATIONS NOTED

THROTTLE CONTROL LINKAGE

A 40, A 70

As a precaution against the possibility of the accelerator pedal locking in the fully depressed position, the accelerator pedal lever is now attached to the outside of the pedal link instead of the inside.

At the same time the joint pin, securing the accelerator pedal lever to the pedal link, is positioned so that the head of the pin is on the outside, and the washer and split pin are on the inside of the link (see illustration).

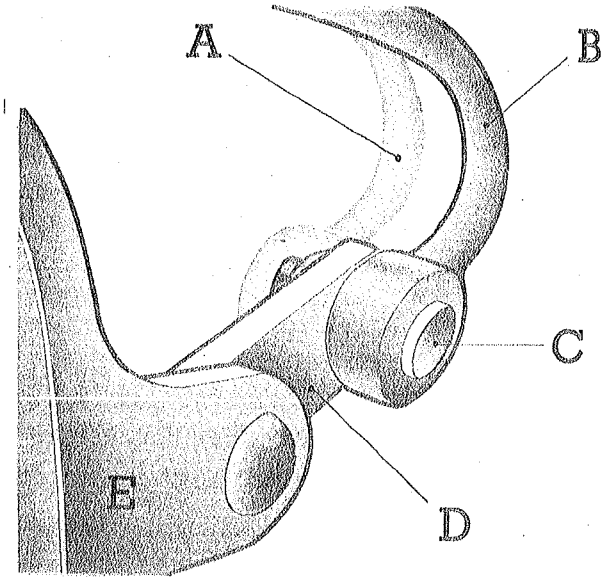

STR 1291

A = Old position of accelerator pedal lever

B = New position of accelerator pedal lever

C = Joint pin

D = Accelerator pedal link

E = Accelerator pedal

FOR YOUR RECORDS	PARTS LISTS
	STOCK CARDS
	PARTS ORDERED
	ALTERATIONS NOTED

Published March 1, 1954

ACCELERATOR CONTROL ROD

Austin-Healey 100

To facilitate assembly, the control rod between the accelerator pedal shaft lever and the relay lever, has been reduced in length from $10\frac{7}{8}$" (27.62 cm.) to $10\frac{1}{4}$" (26.03 cm.) and the position of the bearings on the toeboard for the accelerator shaft has been raised by a similar amount.

INTERCHANGEABILITY

There is sufficient adjustment obtainable to permit the shorter rod to be used for replacements of the longer one.

SUMMARY OF ALTERATION

Type	Range	Plate	Description	Number per Vehicle	Austin Part Number	Parts List Publication Number
Austin-Healey 100	R.H.S., C.138975–148527 L.H.S., C.138031–148528		Control rod, $10\frac{7}{8}$" long, pedal shaft lever to relay lever (use 2K 8277) .	1	1B 2696	Pub. 1050, Controls, p. 1
	R.H.S., C.148528 on L.H.S., C.148529 on		Control rod, $10\frac{1}{4}$" long, pedal shaft lever to relay lever	1	2K 8277	

FOR YOUR RECORDS	PARTS LISTS
	STOCK CARDS
	PARTS ORDERED
	ALTERATIONS NOTED

Published July 19, 1954

CLUTCH PEDAL LEVER AND SHAFT

A 30

To facilitate assembly, the clutch pedal lever is now secured to the clutch pedal shaft by means of a taper pointed screw which engages with a tapered hole in the shaft, instead of with a cotter and nut.

This alteration coincides with the introduction of a tension spring, which is attached to the bottom end of the clutch pedal lever and hooks into a hole in the frameside member immediately adjacent to the clutch pedal shaft.

INTERCHANGEABILITY

The new clutch pedal lever and clutch pedal shaft can be used together to replace their old counterparts. They are not separately interchangeable. The tension spring can be fitted to older models only if the bottom end of the clutch pedal lever and the frame side member are drilled to provide anchorage for the spring.

SUMMARY OF ALTERATION

Type	Range	Plate	Description	Number per Vehicle	Austin Part Number	Parts List Publication Number
A 30	C. 101–50544	H 1	Clutch Pedal Lever	1	2A 5026	Pub. 883B, Controls, p. 2
			Cotter, pedal lever to shaft	1	51K 1761	
			Nut for cotter	1	51K 301	
			Spring washer	1	2K 1210	
		H 5	Clutch Pedal Shaft with lever, R.H. Steering	1	2A 5030	
			Clutch Pedal Shaft with lever, L.H. Steering	1	2A 5032	
	C. 50545 on		Clutch Pedal Lever	1	2A 5345	
			Taper pointed screw, lever to shaft	1	2A 5344	
			Locknut for screw	1	FNZ 205	
			Clutch Pedal Shaft, with lever, R.H. Steering	1	2A 5339	
			Clutch Pedal Shaft with lever, L.H. Steering	1	2A 5341	
			Tension Spring for clutch pedal shaft	1	1G 5999	

FOR YOUR RECORDS	PARTS LISTS
	STOCK CARDS
	PARTS ORDERED
	ALTERATIONS NOTED

PETROL PUMP REPAIR KITS

A selection of repair kits for reconditioning mechanical petrol pumps (diaphragm type) are now available, and contain all the parts normally required in service.

There are two types of repair kit, a primary and a major kit for each petrol pump.

The PRIMARY KIT comprises a selection of parts which may be required in an emergency (i.e., drivers' first aid kit) or in cases where there is insufficient wear in the fuel pump to justify a complete overhaul.

CONTENTS OF PRIMARY KIT: Diaphragm and pull-rod assembly, valves, valve springs, valve retainer gasket, filter bowl or cover cork gasket, filter screw gasket.

THE MAJOR KIT is composed of a more comprehensive selection of parts which are necessary for reconditioning a petrol pump which has been in use for some considerable time and is, therefore, showing signs of wear.

CONTENTS OF MAJOR KIT: Diaphragm and pull-rod assembly, valves, valve springs, valve gasket, valve retainer, valve retainer screws, filter gauze, filter bowl or cover cork gasket, filter screw gasket, link, rocker arm pin, rocker pin clips, rocker pin washers, rocker arm spring, oil seal washers and oil seal retainer.

The contents of the major repair kits vary slightly depending upon the type of pump to be serviced.

Joint washers (pump to cylinder block) are not included in the repair kits; but they can be obtained as separate items.

Petrol Pump	Primary Repair Kit	Major Repair Kit	Joint Washer	Type and Parts List Publication Number
2H 1358	P. 145	P. 146	1E 504	7–H.P., Pub. 185A, p. 12
2H 1359	P. 145	P. 146	1E 504	Big 7–H.P., Pub. 189A, p. 12 8-H.P., Pubs. 371, p. 9 578, p. 10 10-H.P., Pubs. 429, p. 9 577, p. 9
2H 4471	P. 145	P. 146	1E 504	12-H.P., Pubs. 428, p. 12
3H 2130, 2A 371	P. 143	P. 144	2A 113	A 30, Pub. 883B, Engine, p. 15
2H 4934	P. 147	P. 148	1E 504	A 40, Pub. 1099, Engine, p. 23

Continued

FOR YOUR RECORDS	PARTS LISTS
	STOCK CARDS
	PARTS ORDERED
	ALTERATIONS NOTED

PETROL PUMP REPAIR KITS—*continued*

Petrol Pump	Primary Repair Kit	Major Repair Kit	Joint Washer	Type and Parts List Publication Number
3H 973	P. 147	P. 148	1E 504	A 40, Pub. 1099, Engine, p. 23 16-H.P. Taxi, Pub. 558A, p. 14 16-H.P. Hire-Car, Pub. 728, p. 13 A 70, Pubs. 603A, p. 16 730, p. 13 780A, p. 14 853, p. 13 A 90, Pub. 787, p. 15
2H 4251	P. 145	P. 146	1E 504	16-H.P., Pub. 354, p. 18 16-H.P. Taxi, Pub. 558A, p. 14 A 70, Pub. 603A, p. 16
3H 687	P. 147	P. 148	1E 504	A 125, Pubs. 430A, p. 14 779, p. 16 A 135, Pub. 624, p. 14
3H 1583	P. 147	P. 148	1G 1002	A 125, Pubs. 430A, p. 14 779, p. 16 A 135, Pub. 624, p. 14

MAIN WIRING HARNESS

A 30

To improve the wiring layout, and facilitate assembly, a new main wiring harness has now been introduced. In addition, a longer cable is now being used to connect the left hand trafficator to the main cable harness.

INTERCHANGEABILITY

The new main harness and the new trafficator cable are interchangeable with their old counterpart and will be supplied for replacements when stocks of the old ones are exhausted.

SUMMARY OF ALTERATION

Type	Range	Plate	Description	Number per Vehicle	Austin Part Number	Parts List Publication Number
A 30	C. 101–55795		Main Cable Harness (use 2A 2004)	1	2A 447	Pub. 883B, Electrical, p. 2
	C. 55796 on		Main Cable Harness . .	1	2A 2004	
	C. 101–55795		Trafficator Cable, left hand (use 2A 2005). . . .	1	6K 745	
	C. 55796 on		Trafficator Cable, left hand	1	2A 2005	

FOR YOUR RECORDS	PARTS LISTS
	STOCK CARDS
	PARTS ORDERED
	ALTERATIONS NOTED

Issue 7

Published July 19, 1954

HORN
A 30

A new horn with an improved performance is now being fitted to all A 30 vehicles.

INTERCHANGEABILITY

The new horn is interchangeable and should be used for replacements.

SUMMARY OF ALTERATION

Type	Range	Plate	Description	Number per Vehicle	Austin Part Number	Parts List Publication Number
A 30	C.101–64410		Horn (Alternatives)	1	3H 2243	Pub. 883B/2, p. 9
			Horn (Alternatives)	1	3H 1669	
	C.64411 on		Horn	1	2A 9000	

FOR YOUR RECORDS	
	PARTS LISTS
	STOCK CARDS
	PARTS ORDERED
	ALTERATIONS NOTED

Published October 25, 1954

VALVE SPRINGS, CUPS AND OIL SEALS

A 70, A 125

In order to reduce valve spring failure to a minimum, new springs have now been introduced. These new springs have $6\frac{1}{2}$ coils and a free length of $2\frac{11}{64}$" (55.164 mm.), whereas the old ones have $5\frac{1}{2}$ coils and a free length of $1\frac{25}{32}$" (45.243 mm.).

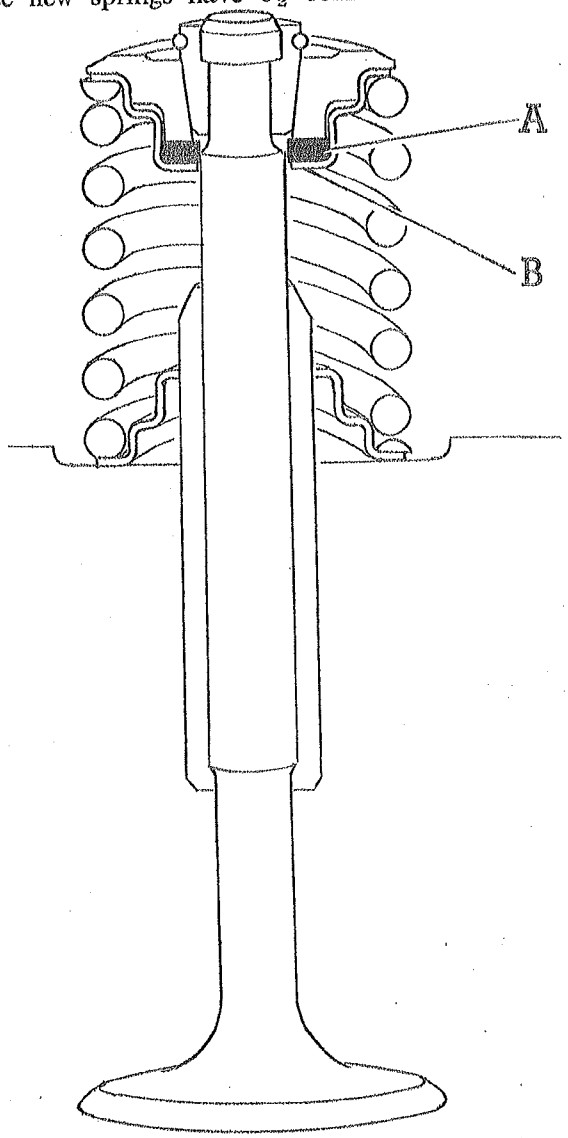

Fig. 1. Old arrangement STR 1273

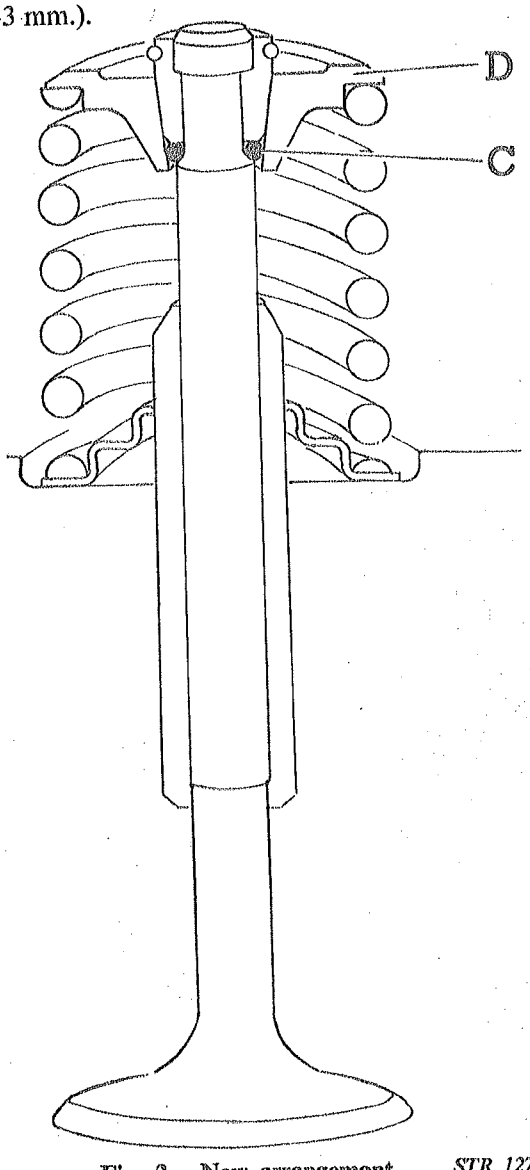

Fig. 2. New arrangement STR 1274

COMMENCING ENGINE NUMBERS:—

A 125	–	–	11939
A 70	–	–	To be published later

Continued

FOR YOUR RECORDS	PARTS LISTS
	STOCK CARDS
	PARTS ORDERED
	ALTERATIONS NOTED

VALVE SPRINGS, CUPS AND OIL SEALS—*continued*

The old oil seal A (Fig. 1), fitted inside its retainer B, has been dispensed with and a new oil seal C (Fig. 2) has been introduced which fits inside the valve spring cup D. Dimensional differences between the old and the new valve spring cups and oil seals are shown in Figs. 3 and 4.

INTERCHANGEABILITY

The old and new parts are only interchangeable together, in sets. Parts are not separately interchangeable. If it is desired to fit the new valve springs, conversion sets of the new parts can be obtained by quoting part numbers as follows :—

For A 70 —quote K8-96.

For A 125—quote K4-455.

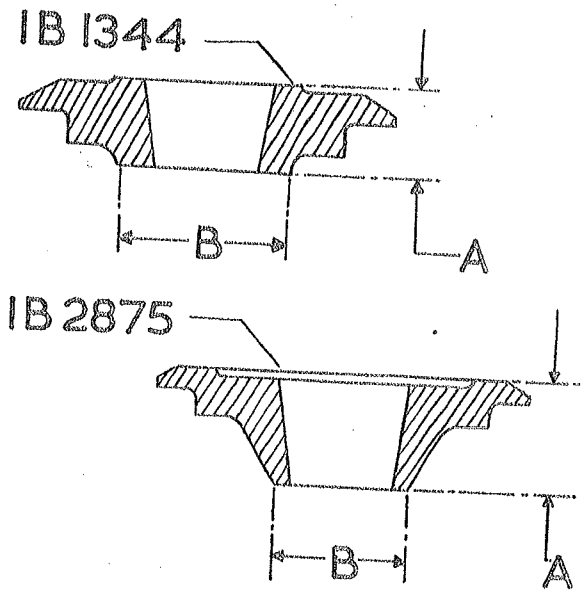

STR 1275

	A	B
1B 1344 ..	$\frac{11}{32}$" (8.731 mm.)	$\frac{5}{8}$" (15.875 mm.)
1B 2875 ..	$\frac{7}{16}$" (11.112 mm.)	$\frac{1}{2}$" (12.700 mm.)

Fig. 3

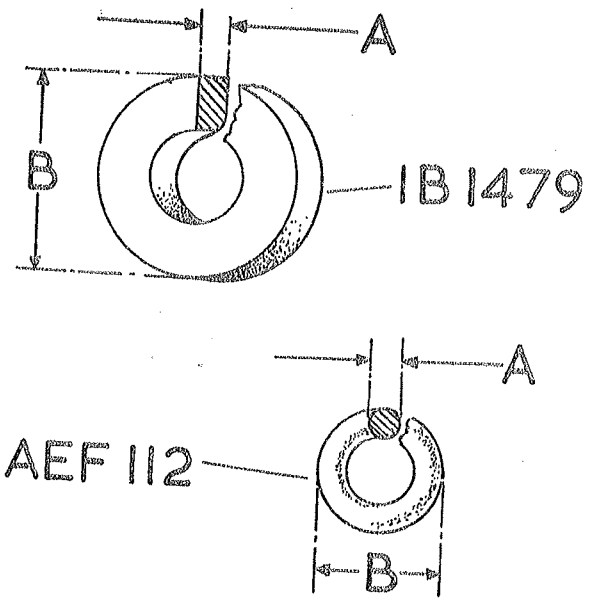

STR 1276

	A	B
1B 1479 ..	$\frac{1}{8}$" (3.1750 mm.)	$\frac{21}{32}$" (16.668 mm.)
AEF 112..	$\frac{3}{32}$" (2.3812 mm.)	$\frac{7}{16}$" (11.112 mm.)

Fig. 4

SUMMARY OF ALTERATION

Description	Number Off	Old Part	New Part	Type and Parts List Publication Number
Valve Springs	8	2K 8931	1B 2814	A 70 Pubs. 780A, p. 5, 853, p. 5
Valve Spring Cups	8	1B 1344	1B 2875	
Valve Oil Seal Retainers	8	1B 1343	—	
Valve Oil Seals	8	1B 1479	AEF 112	

Continued

VALVE SPRINGS, CUPS AND OIL SEALS—*continued*

SUMMARY OF ALTERATION—*continued*

Description	Number Off	Old Part	New Part	Type and Parts List Publication Number
Engine Joint Washer Set for complete overhaul	1	B3-124A	B3-633	A 70 Pubs. 780A, p. 66, 853, p. 64
Engine Joint Washer Set for decarbonizing	1	B3-124D	B3-633A	
Valve Springs	12	2K 8931	1B 2814	A 125 Pubs. 430A, p. 5, 779, p. 5
Valve Spring Cups	12	1B 1344	1B 2875	
Valve Oil Seal Retainers	12	1B 1343	—	
Valve Oil Seals	12	1B 1479	AEF 112	
Engine Joint Washer Set for complete overhaul	1	D2-138AB	D2-200	A 125 Pubs. 430A, p. 72, 779, p. 83
Engine Joint Washer Set for decarbonizing	1	D2-17	D2-200A	

FITTING AND REMOVING FAN BELTS

When fitting or removing a fan belt, it is imperative that the dynamo mounting bolts A and adjusting link bolt B (Fig. 1) be slackened off to allow the belt to be lifted freely over the flanges of the pulleys.

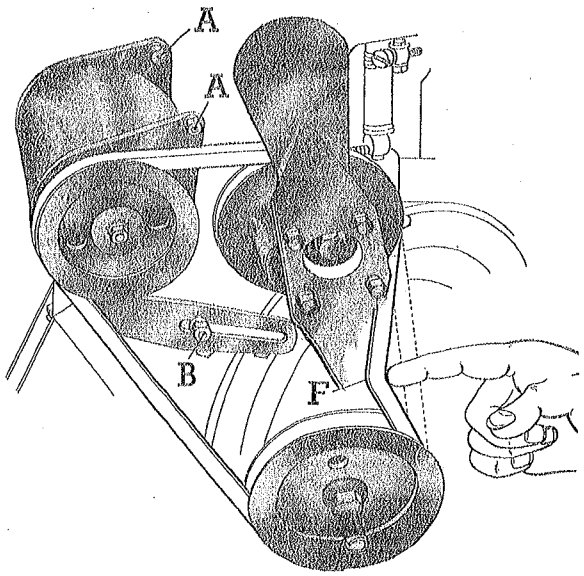

Fig. 1 *STR 1268*

The importance of this will be clearly seen from the illustration (Fig. 2) showing how a fan belt is constructed.

There is an elastic woven envelope C which akes the wear and transmits the load to the load cords. These cords D are endless, and are woven from special high tensile rayon. The load cords are embedded in rubber E, in the part of the belt which is subjected to the least bending stress.

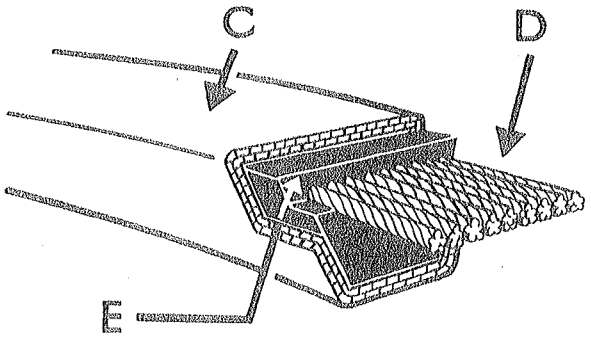

Fig. 2 *STR 1269*

The load cords will not stretch, therefore ensuring a long life for the belt, but should they be subjected to the undue strain which is imposed upon them by 'riding' or levering the belt over the edge of a pulley flange, then the load cords will fracture, and although no external damage will show, early failure of the belt is inevitable.

All Austin engines are designed with sufficient adjustment in the dynamo mounting to permit correct fitting of the fan belt. Fan belts must not be tensioned up drum-tight; the tension is correct when the belt can be pressed in by about 1" (25.4 mm.) at F (Fig. 1).

ENGINE REAR PLATE

Austin-Healey 100, A 70

To allow more clearance for the clutch pedal on the Austin-Healey 100, the engine rear plate, also fitted to the A 70, has been modified by deleting the outer boss and hole A at the starter motor fixing face (see illustration). The gearbox casing has been altered to accommodate the modified plate although there is no change in part number.

The earthing cable, which was originally fixed by a bolt at this point, has been moved to the lower bolt securing the gearbox to the mounting plate.

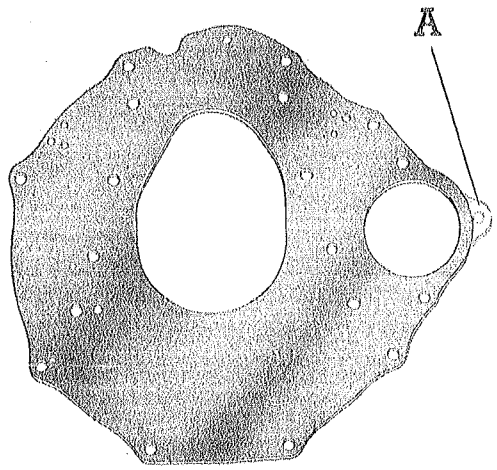

STR 1279

INTERCHANGEABILITY

The new rear plate can be used for replacement, also the modified gearbox casing.

COMMENCING ENGINE NUMBERS:—

A 70 Saloon – – –	203231
Pick-Up, Countryman –	174217

COMMENCING CHASSIS NUMBERS:—

A 70 Saloon, R.H. Steering – –	148304
L.H. Steering – –	148307
Pick-Up, R.H. Steering – –	148319
L.H. Steering – –	148428
Countryman, R.H. Steering –	148459

SUMMARY OF ALTERATION

Description	Number Off	Old Part	New Part	Type and Parts List Publication Number
Engine Rear Plate	1	1F 1332	1B 2842	A 70 Pubs. 780A, p. 3, 853, p. 3

FOR YOUR RECORDS	
	PARTS LISTS
	STOCK CARDS
	PARTS ORDERED
	ALTERATIONS NOTED

Published February 15, 1954

ELECTRIC PETROL PUMP

A 125, A 135 Export Vehicles

An electric petrol pump is now fitted to exported A 125 and A 135 vehicles. This modification entails new petrol pipes of increased diameter which are lagged with asbestos rope and secured with clips. At the same time a six-bladed fan is fitted to all vehicles exported to countries having a hot climate.

INTERCHANGEABILITY

This system can be adopted on vehicles originally fitted with a mechanical petrol pump.

METHOD OF CONVERSION

1. Remove the mechanical petrol pump and blank off the hole in the crankcase with the blanking plate and joint washer, placing distance collars

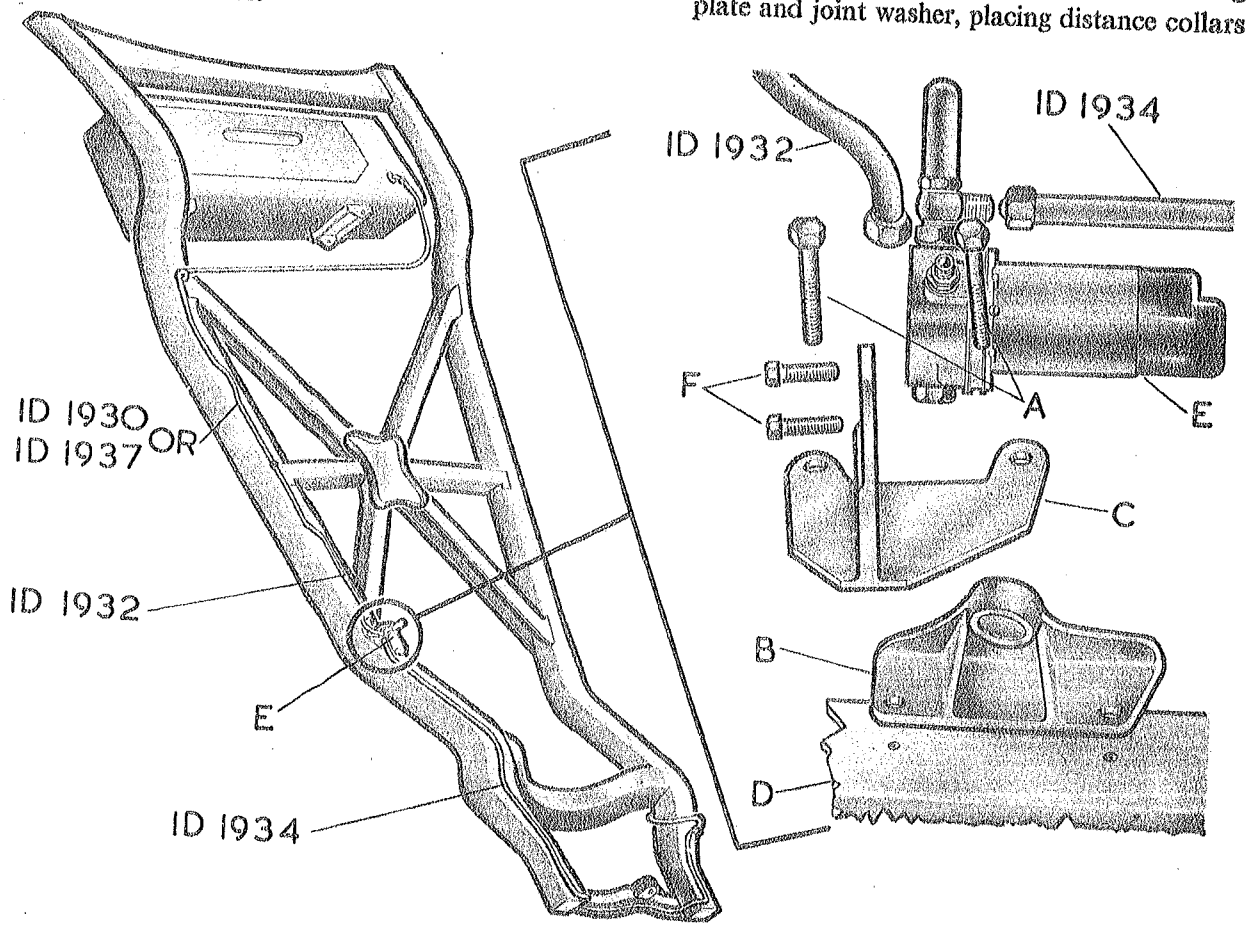

Arrangement of Electric Petrol Pump Fitting *STR 1283*

COMMENCING CHASSIS NUMBERS:—

A 125 Ambulance, R.H. Steering – – 10395
L.H. Steering – – 10398

FOR YOUR RECORDS	PARTS LISTS
	STOCK CARDS
	PARTS ORDERED
	ALTERATIONS NOTED

Continued

ELECTRIC PETROL PUMP—*continued*

METHOD OF CONVERSION—*continued*

on the studs before fitting the nuts and spring washers.

2. Remove the setscrews A securing the handbrake shaft lever bracket B to the chassis frame and, with the new electric petrol pump bracket C in the uppermost position, secure both brackets to the chassis frame D by means of longer setscrews.
3. Fit the electric petrol pump E to its bracket C, noting that the pump outlet is in a vertical position, by means of two setscrews F.
4. Finally, connect the petrol pump to the tank by means of the two lagged pipes, and fit the new flexible pipe from the pump to the carburetter.
5. Using a suitable length of electric cable (28/.012 gauge), connect the "SW" terminal on the ignition coil to the terminal on the petrol pump cover.
6. Should it be desirable to fit a six-bladed fan, then a new fan and water pump pulley, together with distance piece and longer setscrews, must be used.

SUMMARY OF ALTERATION

Description	Number Off	New Part	Type and Parts List Publication Number
Pulley for fan and water pump	1	1D 1936	A 125 Pubs. 430A, pp. 12/14, 779, pp. 14/16 A 135 Pub. 624, pp. 12/14
Fan (6-blade)	1	1K 2208	
Distance piece	1	1B 2173	
Setscrews, fan to pulley	4	2K 5756	
Spring Washers	4	2K 5319	
Electric Petrol Pump	1	3H 3049	
Bracket for pump	1	1D 1927	
Setscrews, pump to bracket	2	2K 3047	
Spring Washers	2	2K 5894	
Petrol Pipe, tank to union	1	1D 1930	A 125 Pub. 430A, p. 53 A 135 Pub. 624, p. 56
Asbestos Rope	1	1D 1941	
Clips, petrol pipes to frame	10	3H 856	
Screws	6	2K 3869	
Spring Washers	6	2K 1209	
Petrol Pipe, tank to union	1	1D 1937	A 125 Pub. 779, p. 60
Asbestos Rope	1	1D 1942	
Clips, pipes to frame	11	3H 856	
Screws	7	2K 3869	
Spring Washers	7	2K 5319	

Continued

ELECTRIC PETROL PUMP—*continued*

SUMMARY OF ALTERATION—*continued*

Description	Number Off	New Part	Type and Parts List Publication Number
Petrol Pipe, union to pump	1	1D 1932	A 125
Asbestos Rope	1	1D 1940	Pubs. 430A, p. 53,
Petrol Pipe, pump to flexible pipe	1	1D 1934	779, p. 60
Asbestos Rope	1	1D 1939	A 135
Flexible Petrol Pipe	1	1K 2726	Pub. 624, p. 56
Blanking Plate for mechanical pump facing on crankcase	1	1B 2386	A 125
Joint Washer	1	1G 1002	Pubs. 430A, p. 14,
Collars for mechanical petrol pump studs	2	2K 9631	779, p. 16
Setscrews, handbrake and petrol pump brackets to frame	2	2K 8688	A 135 Pub. 629, p. 14

OIL RESERVOIR OIL LEAKS

A 30

Oil reservoir oil leaks can be attributed to incorrect fitting of the front and rear main bearing cap oil seals.

Before attempting to fit new seals, see that the inside faces of the channels, at either end of the oil reservoir, are completely smooth—any roughness or sharp edges must be removed.

Smear the sides, and underside (outer edge) of the seals with a suitable grease to enable the ends of the seals, which stand proud of the oil reservoir, to fully compress into the seal channels when the reservoir setscrews are tightened. Before fitting the reservoir, the top side of the seals should be slightly smeared with "Heldite" grease to obtain a good joint. Fig. 1 depicts an oil seal A in its true position after the reservoir has been fitted.

If the foregoing precautions are not observed the ends of the cork seal will in all probability buckle at B as shown in Fig. 2, resulting in the distortion of the flange on the oil reservoir, causing a bad joint and consequent oil leakage.

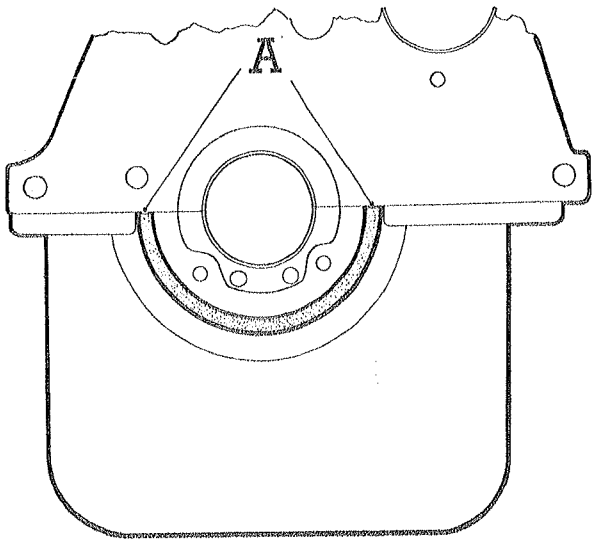

Fig. 1 *STR 1292*

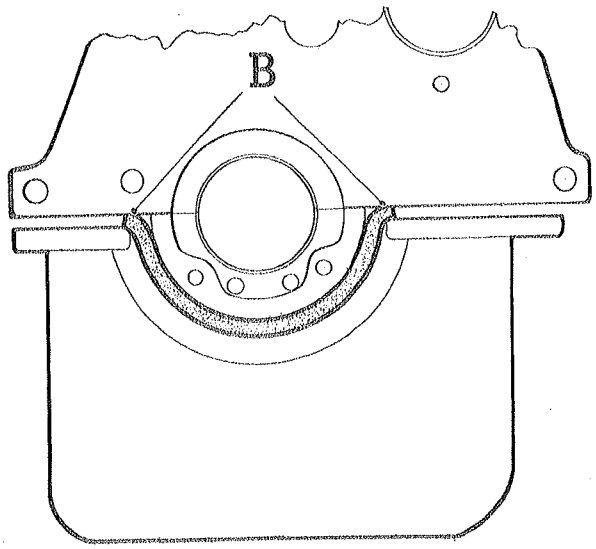

Fig. 2 *STR 1293*

FOR YOUR RECORDS	PARTS LISTS
	STOCK CARDS
	PARTS ORDERED
	ALTERATIONS NOTED

CYLINDER HEAD JOINT WASHER

A 30

The cylinder head joint washer has been modified to prevent oil leaking from the valve rocker feed hole.

The corrugations in the joint washer, around the two end oil holes, have been increased in height to give an improved seal.

INTERCHANGEABILITY

The new joint washer will be supplied for replacements.

SUMMARY OF ALTERATION

Type	Range	Plate	Description	Number per Vehicle	Austin Part Number	Parts List Publication Number
AS.3, A2S.4, AS.4	E.101—57028	A 104	Joint washer (supplied in multiples of 12), use 2A 521	1	2A 28	Pub. 883B, Engine, p. 9
	E.57029 on		Joint washer (supplied in multiples of 12) . . .	1	2A 521	

FOR YOUR RECORDS	PARTS LISTS
	STOCK CARDS
	PARTS ORDERED
	ALTERATIONS NOTED

Published April 26 1954

SOLUBLE OIL IN WATER COOLING SYSTEM

Soluble oil is often added to the water cooling system to reduce wear of the water pump seal and to eliminate the scratching sound which may emanate from wear.

The presence of too much soluble oil, however, can have a detrimental effect on the rubber diaphragm fitted to the heater water valve.

Tests have shown that the permissible quantity of soluble oil added to the water cooling system must on no account exceed 2%.

The water capacity, and the permissible quantity of soluble oil, for the various types of vehicles is given below.

Model	Water Capacity	Permissible quantity of soluble oil (maximum)
A 30	8½ pints	3.4 Fluid ozs. (Approx. $\frac{1}{6}$ pint)
A 40 (GS.3 & GS.4)	12 pints	4.8 Fluid ozs. (Approx. $\frac{1}{4}$–$\frac{1}{5}$ pint)
A 40 (GD.2 & GD.3)	14 pints	5.6 Fluid ozs. (Approx. $\frac{1}{3}$–$\frac{1}{4}$ pint)
A 70 & A 90	19 pints	7.6 Fluid ozs. (Approx. $\frac{2}{5}$ pint)
A 125, A 135	28 pints	11.2 Fluid ozs. (Approx. $\frac{3}{5}$ pint)
Austin-Healey 100	20 pints	8 Fluid ozs. (Approx. $\frac{2}{5}$ pint)

AIR CLEANER SUPPORT

A 30

A new air cleaner support stay, part number 2A 505, has been introduced for use with the oil bath type of air cleaner which is fitted to export cars. The new stay is similar in design to the old one, part number 2A 116, but the gauge A of metal has been increased from .064″ (1.626 mm.) to .080″ (2.032 mm.) and the width B has been increased from $\frac{3}{4}$″ (19.05 mm.) to 1″ (25.4 mm.).

INTERCHANGEABILITY

The new stay will be supplied for replacements when stocks of the old one are exhausted.

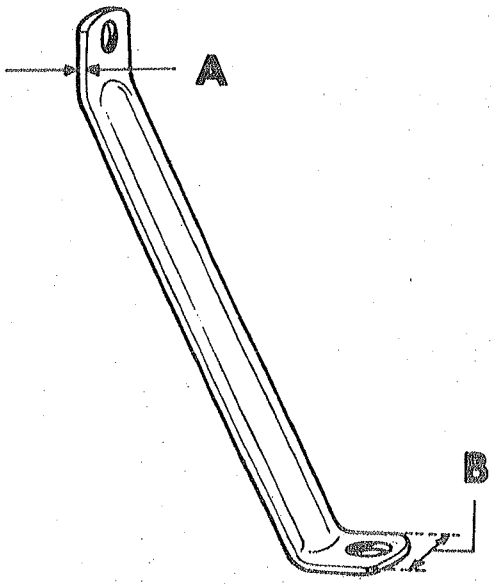

STR 1371

COMMENCING CHASSIS NUMBERS:—

AS.4,	R.H. Steering	– –	36725
	L.H. Steering	– –	35935
A2S.4,	R.H. Steering	– –	36773
	L.H. Steering	– –	36718

FOR YOUR RECORDS	PARTS LISTS
	STOCK CARDS
	PARTS ORDERED
	ALTERATIONS NOTED

CRANKSHAFT REAR MAIN JOURNAL

A30

There is a possibility that the oil hole A in the crankshaft rear main journal B may not always fully coincide with the oil grove C in the shell bearing D. This small discrepancy will have no adverse affect in the case of new engines, because the oil hole in the crankshaft, being chamfered, will allow sufficient oil to pass from the shell bearing through the oil way in the crankshaft to the rear connecting rod bearing E.

In the event of the crankshaft journals being reground however, the chamfer would be removed, and therefore, the oil flow could be restricted. It is, therefore, most desirable to re-cut the chamfer after regrinding, and to check carefully that oil will reach the rear connecting rod bearing E.

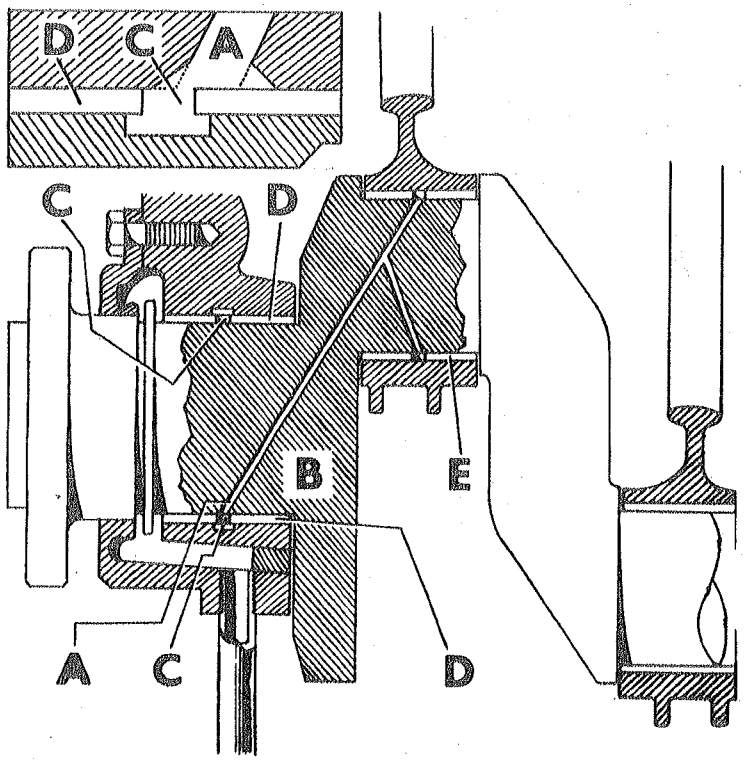

STR 1373

VALVE SPRINGS, CUPS AND OIL SEALS

16-H.P. Taxi and Hire-Car, A 135

In order to reduce valve spring failure to a minimum, new springs have now been introduced. These new springs have 6½ coils and a free length of 2$\frac{11}{64}$" (55·164 mm.), whereas the old ones have 5½ coils and a free length of 1$\frac{55}{64}$" (47·22 mm.).

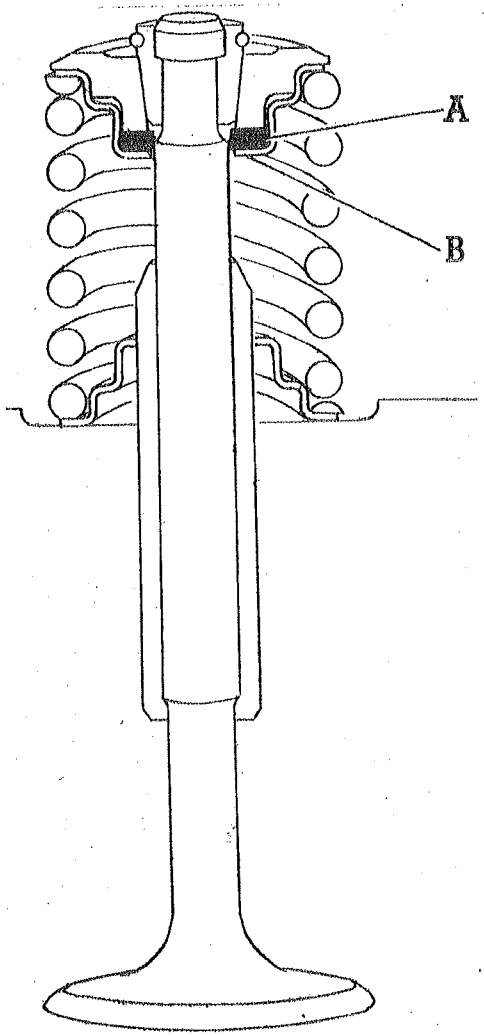

Fig. 1. Old arrangement. STR 1273

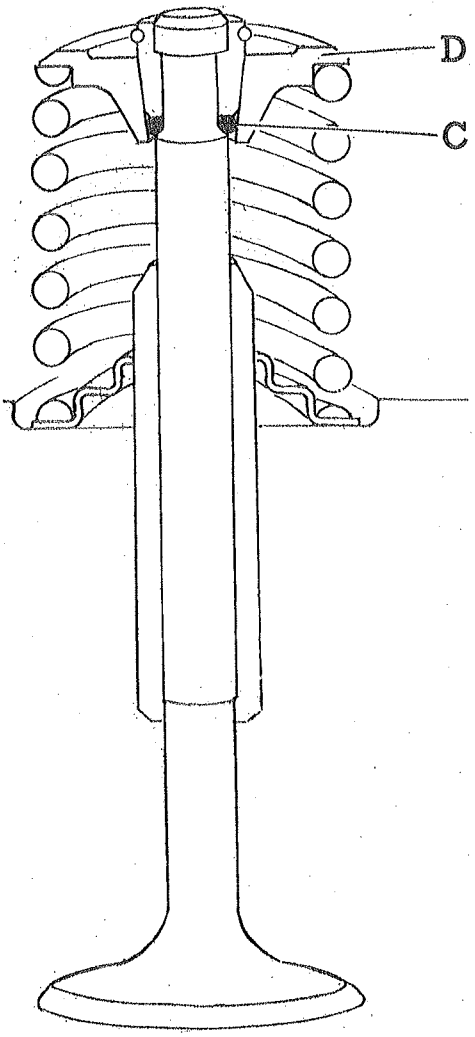

Fig. 2. New arrangement. STR 1274

FOR YOUR RECORDS	PARTS LISTS
	STOCK CARDS
	PARTS ORDERED
	ALTERATIONS NOTED

Continued

VALVE SPRINGS, CUPS AND OIL SEALS—*continued*

The old oil seal A (Fig. 1), fitted inside its retainer B, has been dispensed with and a new oil seal C (Fig. 2) has been introduced which fits inside the valve spring cup D. Dimensional differences between the old and the new valve spring cups and oil seals are shown in Figs. 3 and 4.

INTERCHANGEABILITY

The old and new parts are only interchangeable together, in sets. Parts are not separately interchangeable. If it is desired to fit the new valve springs, conversion sets of the new parts can be obtained by quoting part numbers as follows:—

Taxi or Hire-Car – – Quote K8–96
A 135 – – – – Quote K4–455

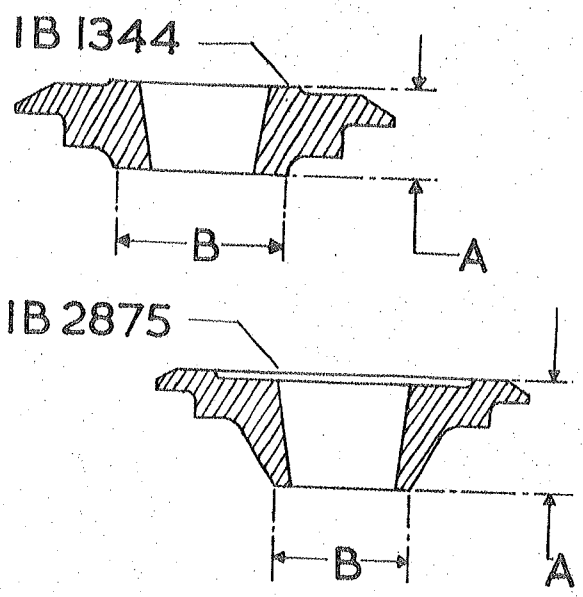

Fig. 3 *STR 1275*

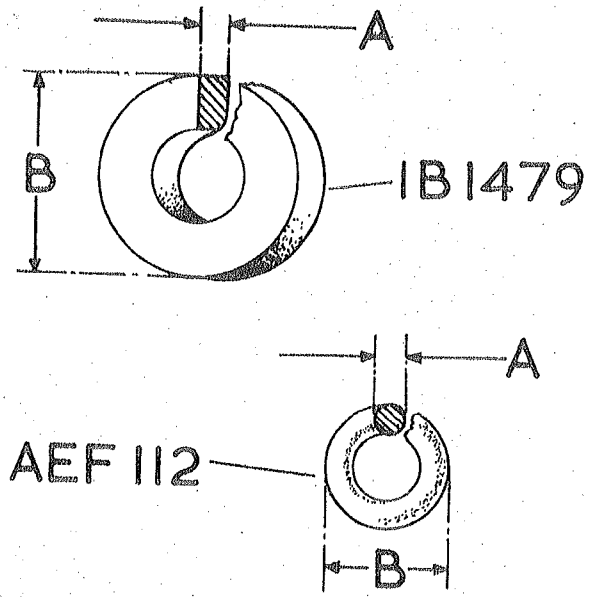

Fig. 4 *STR 1276*

1B 1344	A $\frac{11}{64}$″ (8.731 mm.)	B $\frac{5}{8}$″ (15.875 mm.)	1B 1479	A $\frac{1}{8}$″ (3.1750 mm.)	B $\frac{21}{32}$″ (16.668 mm.)
1B 2875	$\frac{7}{16}$″ (11.112 mm.)	$\frac{1}{2}$″ (12.700 mm.)	AEF 112	$\frac{3}{32}$″ (2.3812 mm.)	$\frac{7}{16}$″ (11.112 mm.)

SUMMARY OF ALTERATION

Type	Range	Plate	Description	Number per Vehicle	Austin Part Number	Parts List Publication Number
Taxi Hire-Car	E.55344–206036 E.98978–138199		Valve springs (use 1B 2814 with 1B 2875 and AEF 112)	8	6K 87	16-H.P. Taxi Pub. 558A, p. 5
Taxi Hire-Car	E.17800–206036 E.25001–138199		Valve spring cups	8	1B 1344	
			Valve oil seals (rubber)	8	1B 1479	16-H.P. Hire-Car Pub. 728, p. 5
			Valve oil seal retainers	8	1B 1343	
Taxi Hire-Car	E.206037 on E.138200 on		Valve springs	8	1B 2814	
			Valve spring cups	8	1B 2875	
			Valve oil seals (rubber)	8	AEF 112	

Continued

VALVE SPRINGS, CUPS AND OIL SEALS—*continued*

SUMMARY OF ALTERATION—*continued*

Type	Range	Plate	Description	Number per Vehicle	Austin Part Number	Parts List Publication Number
Hire-Car	E.25001–138199		Engine joint washer set for complete overhaul	1	B3–167A	16-H.P. Hire-Car Pub. 728, p. 64
			Engine joint washer set for decarbonizing	1	B3–167D	
	E.138200 on		Engine joint washer set for complete overhaul	1	B3–636	
			Engine joint washer set for decarbonizing	1	B3–636A	
Taxi	E.55244–206036		*Engine joint washer set for complete overhaul	1	B3–637	16-H.P. Taxi Pub. 558A, p. 59
			*Engine joint washer set for decarbonizing	1	B3–637A	
	E.206037 on		Engine joint washer set for complete overhaul	1	B3–638	
			Engine joint washer set for decarbonizing	1	B3–638A	
A135	**E.2196–		Valve springs (use 1B 2814 with 1B 2875 and AEF 112)	12	6K 87	A 135 Pub. 624, p. 5
	**E.501–		Valve spring cups	12	1B 1344	
			Valve oil seals (rubber)	12	1B 1479	
			Valve oil seal retainer	12	1B 1343	
	**E. on		Valve springs	12	1B 2814	
			Valve spring cups	12	1B 2875	
			Valve oil seals (rubber)	12	AEF 112	
A135	**E.2368–		Engine joint washer set for complete overhaul (3 carburetter engines)	1	D2–138AC	A 135 Pub. 624, p. 77
			Engine joint washer set for complete overhaul (single carburetter engines)	1	D2–138AB	
	**E.501–		Engine joint washer set for decarbonizing (3 carburetter engine)	1	D2–93	
			Engine joint washer set for decarbonizing (single carburetter engines)	1	D2–17	
A135	**E. on		Engine joint washer set for complete overhaul (3 carburetter engines)	1	D2–201	A 135 Pub. 624, p. 77
			Engine joint washer set for complete overhaul (single carburetter engines)	1	D2–200	
			Engine joint washer set for decarbonizing (3 carburetter engines)	1	D2–201A	
			Engine joint washer set for decarbonizing (single carburetter engines)	1	D2–200A	

* Not previously listed.

** Engine numbers will be published later.

WATER PUMP BEARINGS

A 30, A 40

Bearings with a pressed steel cage are now being fitted in place of the solid brass cage type. The new bearings are interchangeable with the old ones in this application.

SUMMARY OF ALTERATION

Description	Number Off	Old Part	New Part	Type and Parts List Publication Number
Ball bearings for water pump . .	2	6K 811	2A 457	A 30 Pub. 883B, Engine, p. 14 A 40 Pubs. 884, p. 10 579A/1, p. 7

COMMENCING ENGINE NUMBERS:—

A 30 – – 36035
A 40 – – 929630

FOR YOUR RECORDS	PARTS LISTS
	STOCK CARDS
	PARTS ORDERED
	ALTERATIONS NOTED

MAIN AND CONNECTING ROD BEARING CAP FIXINGS

A 125, A 135

Self-locking nuts (NYLOC) together with a spring washer are now being fitted to the connecting rod cap bolts and main bearing studs in place of castellated nuts and split pins. The addition of a spring washer has necessitated the introduction of longer bolts and studs respectively.

INTERCHANGEABILITY

The new main bearing stud, nut and spring washer, also the new connecting rod bolt, nut and spring washer can be used together to replace their old counterparts. Parts are not separately interchangeable.

SUMMARY OF ALTERATION

Description	Number Off	Old Part	New Part	Type and Parts List Publication Number
Studs for main bearings	8	1K 49	1K 2810	A 125 Pubs. 430A, p. 2, 779, p. 4
Nuts for studs	8	2K 5919	1K 2812	
Split pins	8	2K 1240	—	
Spring washers	8	—	2K 5949	A 135 Pub. 624, p. 2
Connecting rods with cap, bolts and nuts, less bearings, clamping screws and spring washers	6	1D 1263	1D 1943	A 125 Pubs. 430A, p. 4, 779, p. 4
Bolts for connecting rod caps	12	1K 1750	1K 2808	
Nuts for bolts	12	2K 5129	1K 2811	A 135 Pub. 624, p. 4
Split pins	12	2K 1232	—	
Spring washers	12	—	2K 5896	

COMMENCING ENGINE NUMBERS:—

Main Bearing Studs, A 125 Sheerline	11945
A 135 Princess	10406
Connecting Rod Bolts	To be published later

FOR YOUR RECORDS	PARTS LISTS
	STOCK CARDS
	PARTS ORDERED
	ALTERATIONS NOTED

VACUUM IGNITION CONTROL PIPE

A 30

The tube nut at the carburetter end of the vacuum ignition control pipe has been increased in diameter to prevent stripping of the thread whilst in service. Also the vacuum ignition control boss on the carburetter has been altered to suit the new nut.

INTERCHANGEABILITY

The new vacuum ignition control pipe and carburetter are not separately interchangeable with the original counterparts. The new carburetter can be used for replacement purposes providing the new vacuum ignition control pipe is also fitted.

SUMMARY OF ALTERATION

Type	Range	Plate	Description	Number per Vehicle	Austin Part Number	Parts List Publication Number
A 30	To E.44758		Carburetter (use 2A 498 with 2A 499)	1	3H 2128	Pub. 883B, Engine, p. 15
	E.44759 on		Carburetter	1	2A 498	
A 30	To E.44758	A136	Vacuum Ignition Control Pipe with nuts and nipples	1	2A 140	Pub. 883B, Engine, p. 16
	E.44759 on		Vacuum Ignition Control Pipe with nuts and nipples	1	2A 499	

FOR YOUR RECORDS	PARTS LISTS
	STOCK CARDS
	PARTS ORDERED
	ALTERATIONS NOTED

WATER PUMP SEAL

A 30

A water pump of improved design has been introduced on the A 30 engine. The new pump incorporates a special synthetic rubber water seal G, into which is moulded a carbon ring together with a tension spring and spring cup. The distance piece E for the water seal has been reduced in length from 1.17″ (29.718 mm.) to 1.036″ (26.314 mm.) and the water pump body B and spindle with vane L have been modified to suit the new seal. Together, the new parts replace the old water pump body A, sealing ring C, distance piece D, rubber seal F, locating cup H, tension spring J and the spindle with vane K. In addition an improved type of grease retainer N with a bonded rubber ring has been introduced to replace the steel grease retainer M. All other parts of the water pump remain unchanged—see illustration.

INTERCHANGEABILITY

The new water pump assembly is interchangeable with the old one, and will be supplied for replacements when stocks of the old ones are exhausted. The water pump body, seal, distance piece, spindle with vane and grease retainer are not separately interchangeable.

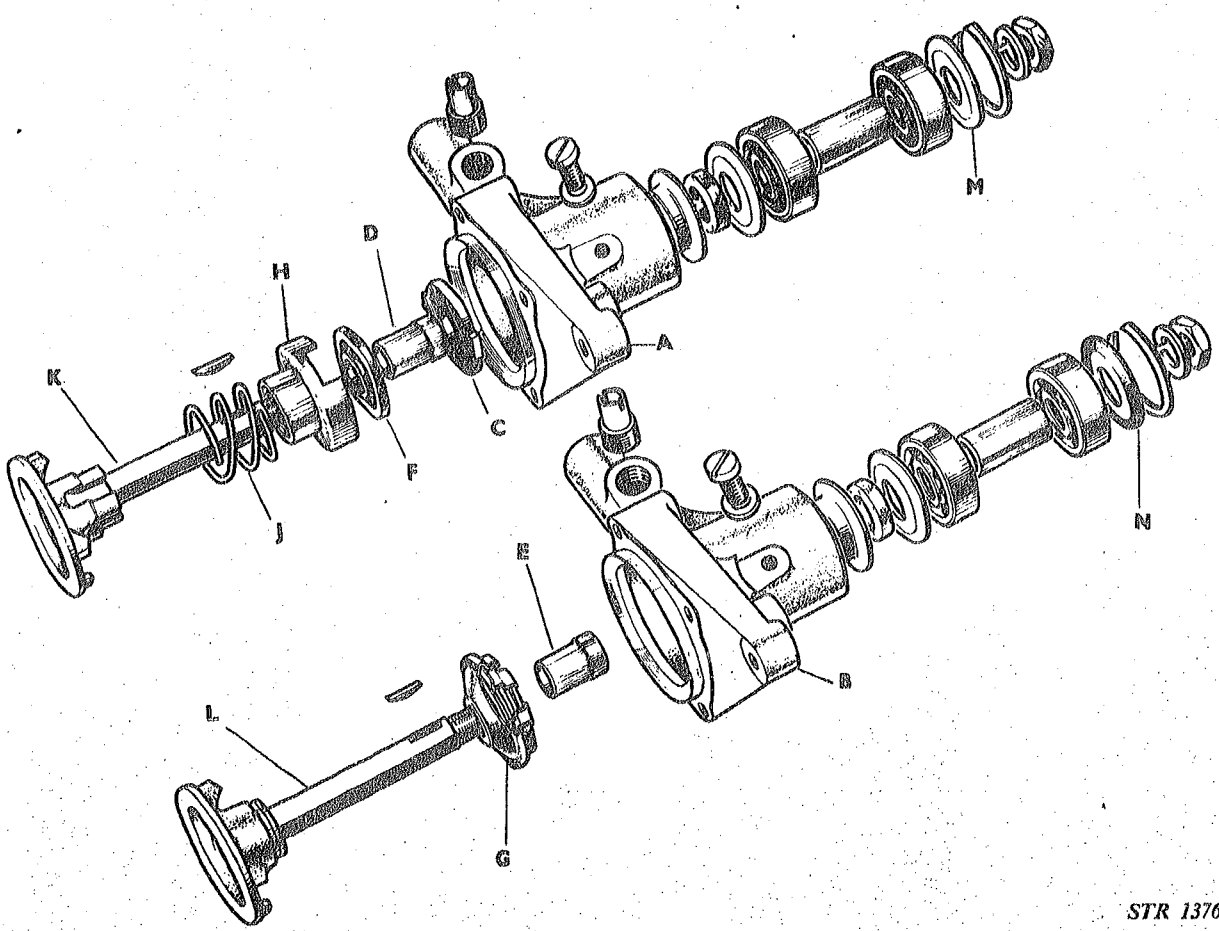

STR 1376

Continued

FOR YOUR RECORDS	PARTS LISTS
	STOCK CARDS
	PARTS ORDERED
	ALTERATIONS NOTED

WATER PUMP SEAL—*continued*

SUMMARY OF ALTERATION

Type	Range	Plate	Description	Number per Vehicle	Austin Part Number	Parts List Publication Number
A 30	To E.41991		Water pump assembly, less pulley	1	2A 373	Pub. 883B, Engine, p. 14
		A48	Water pump body	1	2A 30	
		A57	Spindle with vane	1	2A 29	
		A42	Grease retainer	1	1A 2067	
		A52	Sealing ring	1	3H 1283	
		A53	Rubber seal	1	1G 1145	
		A56	Gland spring	1	2H 4048	
		A55	Locating cup	1	1G 1660	
		A51	Distance piece	1	1A 2073	
			Water pump repair kit (for 2A 373)	1	P 245	
	E.41992 on		Water pump assembly	1	2A 416	
			Water pump body	1	2A 417	
			Spindle with vane	1	2A 418	
			Grease retainer	1	1G 2310	
			Water seal	1	3H 2838	
			Distance piece for seal	1	1G 2303	
			Water pump repair kit (for 2A 416)	1	P 282	

FAN BELT AND PULLEYS

A 30

A new design of wedge type fan belt has been introduced on the A 30 engine, together with suitable pulleys. The new belt is similar to the old one, but the top width A has been reduced from $\frac{21}{32}$" (16.668 mm.) to $\frac{3}{8}$" (9.525 mm.), and the thickness B from $\frac{7}{16}$" (11.112 mm.) to $\frac{5}{16}$" (7.937 mm.). The top width C of the groove in the crankshaft pulley, the dynamo pulley and the fan pulley have all been reduced from $\frac{21}{32}$" (16.668 mm.) to $\frac{3}{8}$" (9.525 mm.)—see illustration.

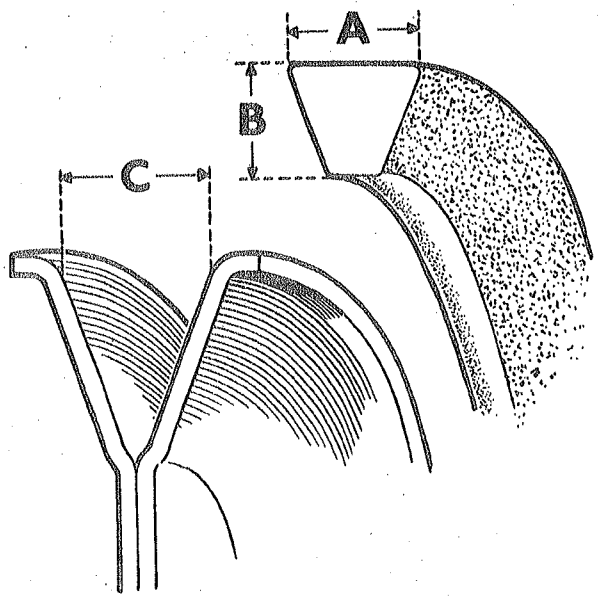

STR 1375

INTERCHANGEABILITY

The new fan belt, crankshaft pulley, dynamo pulley and fan pulley are interchangeable together but not separately.

SUMMARY OF ALTERATION

Type	Range	Plate	Description	Number per Vehicle	Austin Part Number	Parts List Publication Number
A 30	To E.41991 E.41992 on	B14	Crankshaft pulley . . . Crankshaft pulley . . .	1 1	2A 78 2A 405	Pub. 883B, Engine, p. 3
A 30	E.9960–41991 E.41992 on To E.41991 E.41992 on		Pulley for fan and pump . Pulley for fan and pump . Fan belt . . . . . . Fan belt	1 1 1 1	2A 363 2A 408 3H 2134 2A 414	Pub. 883B, Engine, p. 14
A 30	To E.41991 E.41992 on	A58	Pulley for dynamo . . . Pulley for dynamo . . .	1 1	2A 136 2A 412	Pub. 883B, Engine, p. 16

FOR YOUR RECORDS	PARTS LISTS
	STOCK CARDS
	PARTS ORDERED
	ALTERATIONS NOTED

Published April 26, 1954

CARBURETTER
A 30

A modified carburetter, incorporating a new type of discharge nozzle and choke tube, has been introduced to prevent any possibility of ice formation in the choke tube, a phenomenon which has been known to occur under certain climatic conditions.

The new carburetter, Fig. 2, is the same as the old one, except for the choke tube A and discharge nozzle B which replace the choke tube D, inner venturi E and deflector F, as fitted to the old carburetter, Fig. 1.

Fitting and maintenance instructions for the new carburetter are exactly as for the old one, with the exception of the choke tube and nozzle, to which the following instructions apply when fitting these two parts. Place the choke tube A in place, but do not fit the choke retaining screw; see that the choke tube goes right in to rest against the bottom of the housing at G. The nozzle B should next be fitted into position and locked by tightening the nozzle fixing screw H—see Fig. 3. Invert the carburetter so that the bar J which is part of the choke tube comes to rest against the nozzle B. The choke tube should now be secured by the screw K. It is important that after assembly there must be no gap between the bar J and the 'beak' of the nozzle B—see Fig. 2.

INTERCHANGEABILITY

The new carburetter can be used to replace the old one.

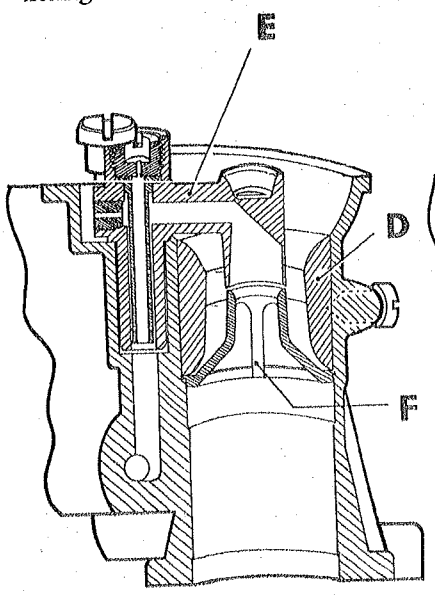

Fig. 1

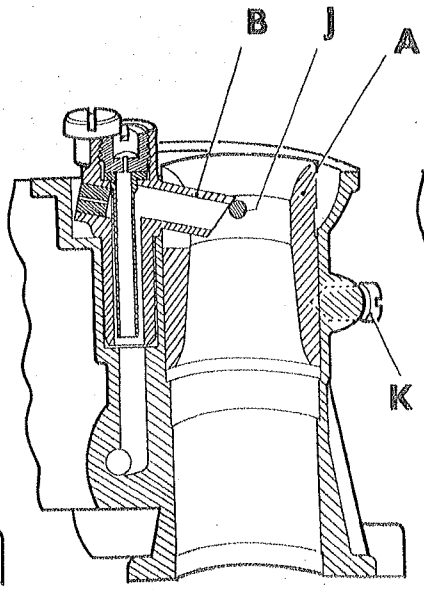

Fig. 2

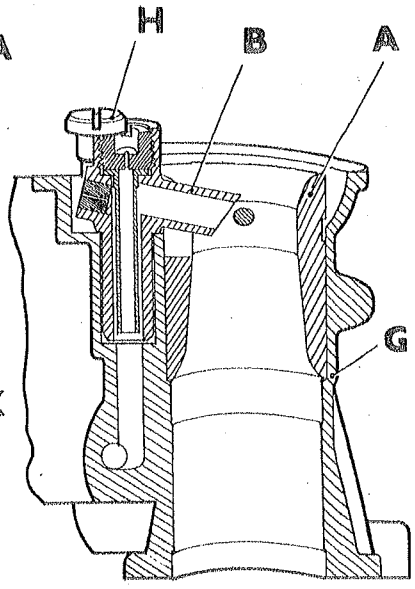

Fig. 3 *STR 1389*

SUMMARY OF ALTERATION

Type	Range	Plate	Description	Number per Vehicle	Austin Part Number	Parts List Publication Number
A30	E.44759–49356 E.49357 on		Carburetter (use 2A 513) . Carburetter	1 1	2A 498 2A 513	Pub. 883B, Engine, p. 15.

FOR YOUR RECORDS	PARTS LISTS
	STOCK CARDS
	PARTS ORDERED
	ALTERATIONS NOTED

Published May 10, 1954

CARBURETTER JET IDENTIFICATION

A 30

To permit finer graduation of jet sizes than is possible with the normal method of marking jets according to the nominal drill diameter in 100ths of a millimetre, the main jet for the carburetter on the A 30 engine is now marked with a number which indicates the actual flow of petrol in cubic centimetres per minute. Originally the main jet was marked with the number 95, indicating a .95 mm. diameter hole through which petrol flows at the rate of 116–118 cc. per minute.

The jets were all carefully calibrated to a flow of 116 cc. per minute and the system of marking according to flow was introduced. The jet size has now been slightly reduced to 113 cc. per minute.

OIL FILTER ADAPTOR

Austin-Healey 100

A new oil filter adaptor has been introduced to prevent any possibility of the oil filter fouling the engine mounting bracket. The new adaptor, part number 11B 190, is similar to the old one, part number 1B 2587, but the angle of face A has been altered to move the oil filter farther away from the engine mounting bracket—see illustration.

Two new setscrews, part number 2K 3174, replace the ones used to fix the original adaptor to the oil filter. It is strongly recommended that the old oil filter adaptor is replaced with the new one at the earliest possible convenience, and distributors and dealers are requested to place orders immediately for sufficient new parts to cover requirements in their territory, quoting part numbers.

INTERCHANGEABILITY

The new adaptor together with the new setscrews should be used for replacements of the old one.

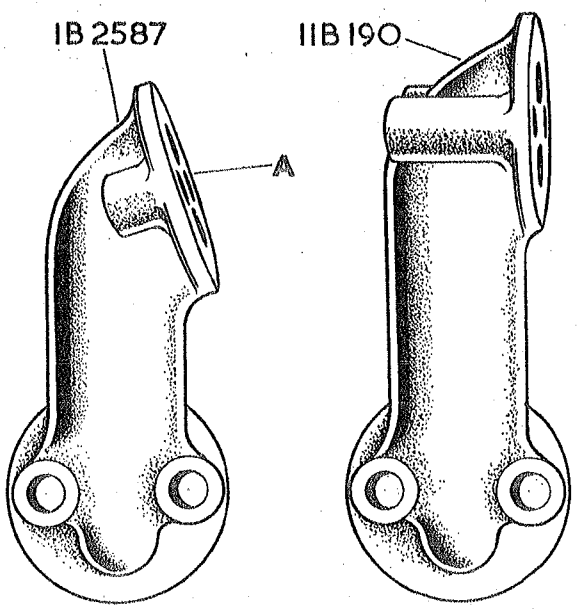

STR 1394

SUMMARY OF ALTERATION

Type	Range	Description	Number per Vehicle	Austin Part Number	Parts List Publication Number
BN.1	E.136894-213324	Adaptor for oil filter (use 11B 190 with 2K 3150 setscrews)	1	1B 2587	Pub. 1050, Engine, p. 16.
		Setscrew, long, adaptor to oil filter	1	2K 3175	
		Setscrew, short, adaptor to oil filter	1	2K 3167	
	E.213325 on	Adaptor for oil filter . . .	1	11B 190	
		Setscrews to oil filter . .	2	2K 3174	

FOR YOUR RECORDS	PARTS LISTS
	STOCK CARDS
	PARTS ORDERED
	ALTERATIONS NOTED

Published May 10, 1954

CARBURETTER NEEDLE

Austin-Healey 100

The fuel consumption on the Austin-Healey 100 has been improved by fitting a new needle with modified taper.

Carburetters fitted with the old type jet needle can be converted, but to preserve engine balance it is essential to replace the needle in both carburetters. The part numbers of the carburetters remain unchanged.

INTERCHANGEABILITY

The modified needle will be supplied for replacements.

SUMMARY OF ALTERATION

Type	Range	Description	Number per Vehicle	Austin Part Number	Parts List Publication Number
BN1	R.H.S. To C.148986 L.H.S. To C.148936	Jet Needles, A.H.2 (use 7H 1706)	2	7H 1677	Pub. 1050, Engine, p. 15
	R.H.S. C.148987 on L.H.S. C.148937 on	Jet Needles, Q.W.	2	7H 1706	

FOR YOUR RECORDS	PARTS LISTS
	STOCK CARDS
	PARTS ORDERED
	ALTERATIONS NOTED

FULL FLOW OIL FILTER

A 70, 16-H.P. Taxi and Hire-Car, Austin-Healey 100

The Tecalemit oil filter (which is an alternative to the Purolator one) has been redesigned to facilitate manufacture. The new filter works in exactly the same way as the old one, but the component parts have been modified, with the exception of the filtering element which has not been altered—see illustration.

INTERCHANGEABILITY

The oil filter assembly is interchangeable; component parts, with the exception of the filtering element, are not.

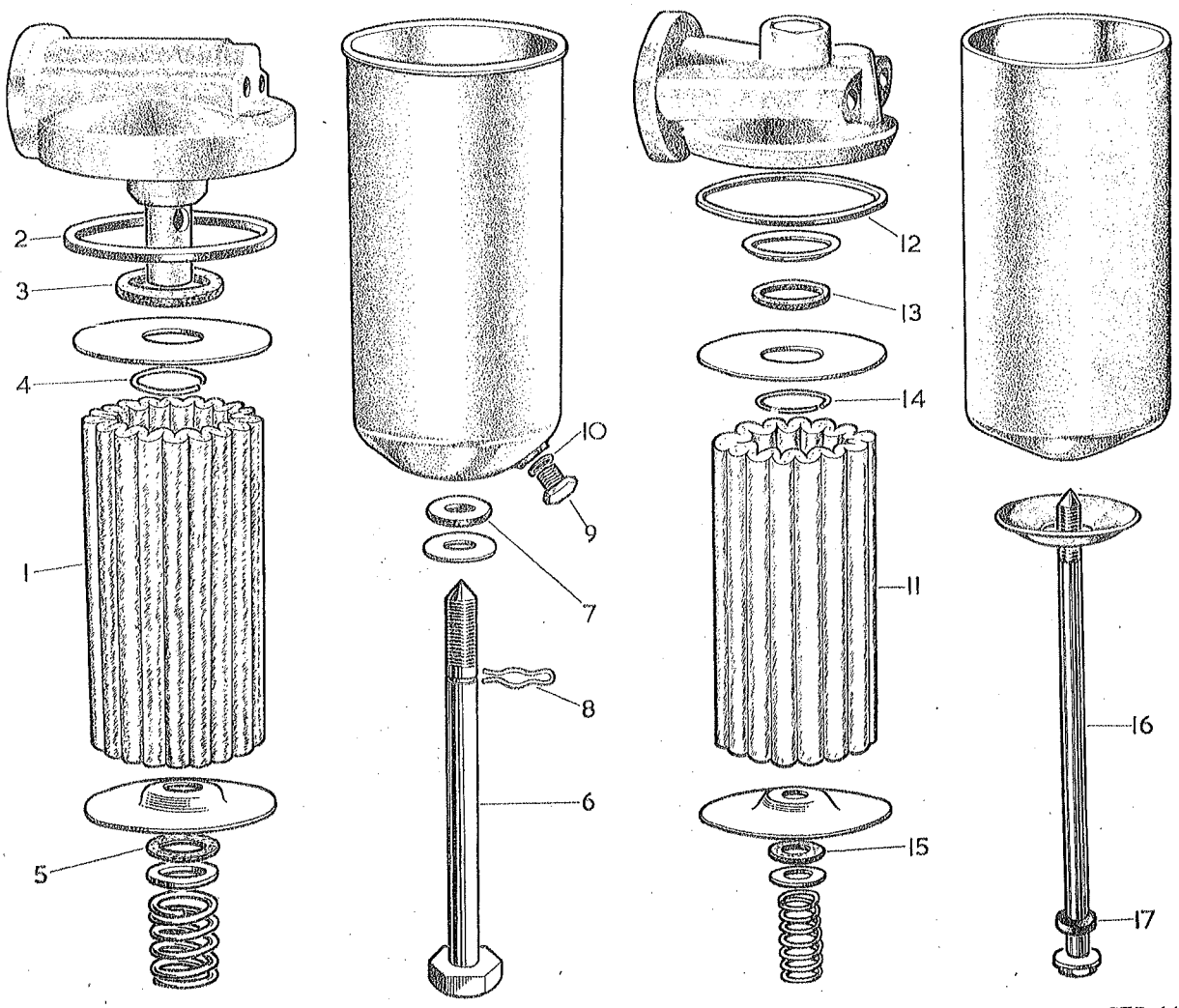

STR 1451

Continued

FULL FLOW OIL FILTER—*continued*

SUMMARY OF ALTERATION

Type	Range	Plate	Description		Number per Vehicle	Austin Part Number	Parts List Publication Number
Austin-Healey 100 Taxi Hire-Car A 70 Pick-Up A 70 Saloon and Countryman	E.136894–207111 E.17800–206159 E.25001–138209 E.132001–208588 E.101–207779		Oil filter, Tecalemit	Alternative to 3H 1287	1	2H 4339	Austin-Healey 100 Pub. 1050, Engine, p. 16 16-H.P. Taxi Pub. 558A, p. 15 16-H.P. Hire-Car Pub. 728, p. 14
		1	Filtering element		1	2H 4340	
		2	Sealing ring, synthetic rubber, container to head		1	7H 155	
		3	Felt washer, element clamping plate to head		1	7H 156	
		4	Circlip for clamping plate		1	7H 157	
		5	Felt washer for element plate		1	7H 160	
		6	Centre bolt		1	7H 159	
		7	Sealing washer, synthetic rubber for centre bolt		1	7H 152	
		8	Hair pin spring for bolt		1	7H 149	
		9	Drain plug		1	7H 163	
		10	Fibre washer for plug		1	7H 162	
Austin-Healey 100 Taxi Hire-Car A 70 Pick-Up A 70 Saloon and Countryman	E.207112 on E.206160 on E.138210 on E.208589 on E.207800 on		Oil filter, Tecalemit	Alternative to 3H 1287	1	1B 2897	A 70 Saloon Pub. 780A, p. 17 A 70 Pick-Up Pub. 853, p. 16
		11	Filtering element		1	2H 4340	
		12	Sealing ring, synthetic rubber container to head		1	7H 1755	
		13	Felt washer, element clamping plate to head		1	7H 1756	
		14	Circlip for clamping plate		1	7H 157	
		15	Felt washer for element pressure plate		1	7H 1758	
		16	Centre bolt		1	7H 1762	
		17	Sealing washer, synthetic rubber, for centre bolt		1	7H 1759	

OIL PRESSURE GAUGE PIPE

Austin-Healey 100

A modified oil pressure gauge pipe has been introduced (for left hand steering cars only) to facilitate assembly, and an additional clip is also used to secure the pipe.

INTERCHANGEABILITY

The new pipe can be used to replace the old one.

SUMMARY OF ALTERATION

Type	Range	Plate	Description	Number per Vehicle	Austin Part Number	Parts List Publication Number
Austin-Healey 100	C.138031–149982		Oil pressure pipe with union nut and nipple, L.H. Steering . . .	1	1B 2740	Pub. 1050, Engine, p. 16
	C.149983 on		Oil pressure pipe with union nut and nipple, L.H. Steering . . .	1	1B 2963	
	C.138031–149982		Clip, pipe to dash, L.H. Steering.	1	2K 5215	
			Screw for clip . . .	1	6K 9897	
	C.149983 on		Clips, pipe to dash, L.H. Steering.	2	2K 5215	
			Screws for clips . . .	2	6K 9897	

FOR YOUR RECORDS	PARTS LISTS
	STOCK CARDS
	PARTS ORDERED
	ALTERATIONS NOTED

VALVE ROCKER SHAFT BRACKETS

A 30

To prevent any possible distortion of the valve rocker shaft brackets, which may be caused by excessive tightening of the securing nuts, the brackets are now being made without a clamping slot. In addition a larger locking plate for the rocker shaft locating screw is now in use, and this locking plate is used on all four valve rocker brackets, replacing the plain washers hitherto used beneath the securing nuts.

INTERCHANGEABILITY

The modified valve rocker brackets, the part numbers of which remain unchanged, will be supplied for replacements of the earlier types which had a clamping slot. The new locking plate for the valve rocker shaft locating screw can be used for replacements of the old one, and can be used to replace the plain washers on the other rocker shaft brackets.

SUMMARY OF ALTERATION

Type	Range	Plate	Description	Number per Vehicle	Austin Part Number	Parts List Publication Number
A 30	E.101–52861		Washers for studs (cylinder head)	9	2K 1204	Pub. 883B, Engine, p. 9
	E.52862 on		Washers for studs (cylinder head)	5	2K 1204	
	E.101–52861	B.51	Locking plate for screw .	1	2A 259	
	E.52862 on		Locking plate for screw and studs	4	2A 515	
	E.101–52861		Washers (valve rocker bracket studs) . . .	4	2K 1203	

FOR YOUR RECORDS	PARTS LISTS
	STOCK CARDS
	PARTS ORDERED
	ALTERATIONS NOTED

MAIN AND CONNECTING ROD BEARING CAP FIXINGS

A 70, Austin-Healey 100, Taxi, Hire-Car

Self-locking nuts (NYLOC) together with a spring washer are now being fitted to the connecting rod cap bolts and main bearing studs in place of slotted nuts and split pins. The addition of a spring washer has necessitated the introduction of longer bolts and studs respectively.

INTERCHANGEABILITY

The new main bearing stud, nut and spring washer can be used together to replace their old counterparts, and so can the connecting rod bolt nut and spring washer. Bolts, studs and nuts are not separately interchangeable, but the new connecting rod with cap, bolts and nuts will be supplied for replacements when stocks of the old ones are exhausted.

SUMMARY OF ALTERATION

Type	Range	Plate	Description	Number per Vehicle	Austin Part Number	Type and Parts List Publication Number
Taxi	E. 17800–206153					
Hire-Car	E. 25001–*		Studs for main bearing caps	6	1K 49	16-H.P. Taxi, Pub. 558A, p. 2
A 70 Pick-Up	E. 132001–208582		Slotted nuts for studs	6	2K 5919	
A 70 Saloon and Countryman	E. 101–207773		Split pins	6	2K 1240	16–H.P. Hire-Car Pub. 728, p. 2
Austin-Healey 100	E. 136894–207105					A 70 Pubs. 853, p. 2 and 780A, p. 2
Taxi	E. 206154 on					Austin-Healey 100 Pub. 1050, Engine, p. 1
Hire-Car	E.* on					
A 70 Pick-Up	E. 208583 on		Studs for main bearing caps	6	1K 2810	
A 70 Saloon and Countryman	E. 207774 on		Self-locking (Nyloc) nuts	6	1K 2812	
			Spring washers	6	2K 5949	
Austin-Healey 100	E. 207106 on					

* To be published at a later date.

Continued

FOR YOUR RECORDS	PARTS LISTS
	STOCK CARDS
	PARTS ORDERED
	ALTERATIONS NOTED

MAIN AND CONNECTING ROD BEARING CAP FIXINGS—*continued*

SUMMARY OF ALTERATION—*continued*

Type	Range	Plate	Description	Number per Vehicle	Austin Part Number	Type and Parts List Publication Number
Taxi	E. 17800–211142					
Hire-Car	E. 25001–211142		Connecting rods with cap, cap bolts, and nuts, less bearings and clamping screw (use 1B 2921). .	4	1B 1345	16-H.P. Taxi, Pub. 558A, p. 4
A70 Pick-Up	E.132001–215120		Bolts for connecting rod	8	1K 1750	
			Slotted nuts for bolts .	8	2K 5129	16-H.P.
A 70 Saloon and Countryman	E. 101–216296		Split pins	8	2K 1232	Hire-Car, Pub. 728, p. 4
Austin-Healey 100	E. 136894–213398					A 70 Pubs. 853, p. 4 and 780A, p. 4
Taxi and Hire-Car	E. 211143 on		Connecting rods with cap, cap bolts, nuts and spring washers, less bearings and setscrews.	4	1B 2921	Austin-Healey 100 Pub. 1050, Engine, p. 5
A 70 Pick-Up	E. 215121 on		Bolts for connecting rod caps	8	1K 2808	
A 70 Saloon and Countryman	E. 216297 on		Self-locking (Nyloc) nuts	8	1K 2811	
			Spring washers . . .	8	2K 5896	
Austin-Healey 100	E. 213399 on					

SELF-LOCKING 'NYLOC' NUTS

The Nyloc self-locking nuts which are now being used in many applications on Austin vehicles, have been thoroughly tested and found to be 100% efficient. The life of these nuts is almost unlimited, and provided they are not damaged, they may be removed and replaced many times yet still retain their self-locking ability.

THE PRINCIPLE

The Nyloc self-locking nut is a standard hexagon nut with its height slightly increased to incorporate a moulded nylon insert. This insert or collar has an internal diameter slightly less than the diameter of the bolt and is not initially threaded.

In assembly, when a bolt passes through the threaded portion of a Nyloc nut and reaches the special insert, further advance is resisted. In overcoming this resistance, the nut is forced away from the bolt head until the sides of the thread are in close contact.

This force distributes itself as a pressure on the side of the bolt thread which will normally carry the load when the nut is drawn home. The pressure results in heavy friction between the sides of the thread in contact, and a considerable anti-rotational force is exerted to prevent the nut from moving under vibration.

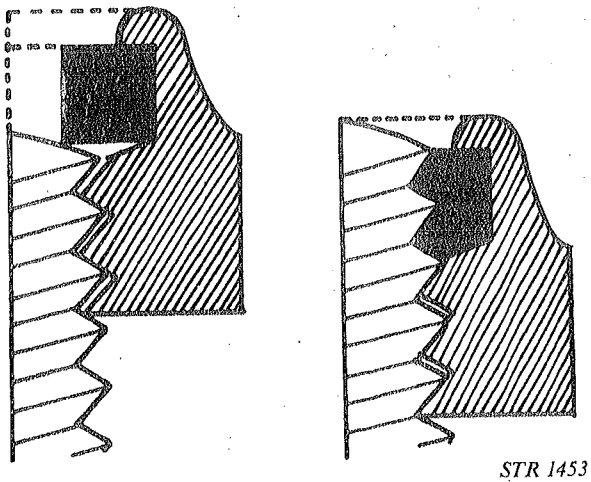

STR 1453

Before the bolt has passed through the insert, the Nyloc is free because of normal tolerance between the threads. After the bolt has passed through the insert heavy friction is exerted between the load-carrying sides of the threads. The Nyloc nut is independently locked to the bolt thread.

The bolt makes its own thread through the nylon insert and the special elastic properties of the material ensure that no chips are removed when it engages the bolt threads. Pressure between the insert and the bolt further increases the anti-rotational characteristics of the nut.

POWERS OF RESISTANCE

Nylon is extremely resistant to deterioration from all oils, petrol, paraffin, kerosene and boiling water. Under test the material was found to be unaffected by solutions of Hydrogen Peroxide, Soda Ash (10%), Sulphuric Acid (5%) and Sodium Hydroxide (10% at 85° C.).

QUALITIES OF ENDURANCE

Six Nyloc nuts were screwed completely on and off a standard $\frac{1}{4}$" B.S.F. bolt 30 times and the final average torque was 2.100 lb. in. In addition a nut was repeatedly assembled on the bolt and after 400 removals, the torque figure was 1 lb. in. (see Graph).

This compares very favourably with the Aircraft specification A.D. 114 requirement of .975 lb. in. torque after only 30 removals.

Endurance Test—Graph

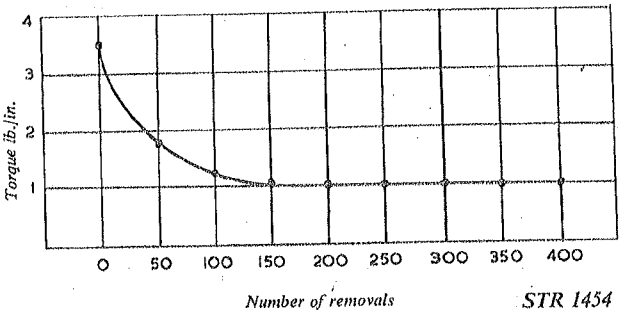

STR 1454

INSPECTION

If when reusing a Nyloc nut the nut becomes too stiff to turn with the fingers, after being screwed on to the bolt up to the nylon insert, and a spanner becomes necessary for further screwing down, then the nut is serviceable. If the nut can be screwed past the nylon insert by finger pressure alone, then it has become damaged and must be replaced.

DOWELS FOR CLUTCH

A 30, A 40, A 70, Austin-Healey 100, Taxi, Hire-Car, A 125, A 135

The dowels in the flywheel which locate the clutch have been slightly increased in length to facilitate assembly. In addition, the A 30 and A 40 range of vehicles have been brought into line with the remainder of the Austin range of vehicles by using stepped dowels in place of plain parallel ones. Larger holes have consequently been drilled in the A 30 and A 40 wheels to receive the stepped dowels.

INTERCHANGEABILITY

The new flywheel with dowels can be used to replace the old one, and the longer dowels will replace the shorter ones except in the case of A 30 and A 40 vehicles.

SUMMARY OF ALTERATION

Type	Range	Plate	Description	Number per Vehicle	Austin Part Number	Parts List Publication Number
A 30	E.17957–56572 E.101–56572		Flywheel with starter gear and dowels . Dowels in flywheel for clutch	1 2	2A 376 2K 5844	Pub. 883B, Engine, p. 3
	E.56573 on		Flywheel with starter gear and dowels . Dowels in flywheel for clutch	1 2	2A 516 1G 2984	
A 40	E.300301–975129	AB11	Flywheel with starter gear . . . . . Dowels, flywheel to clutch	1 2	1G 1234 2K 5844	Pub. 1099, Engine, p. 5
	E.975130 on		Flywheel with starter gear . . . . . Dowels, flywheel to clutch	1 2	1G 2981 1G 2984	

Continued

FOR YOUR RECORDS	PARTS LISTS
	STOCK CARDS
	PARTS ORDERED
	ALTERATIONS NOTED

DOWELS FOR CLUTCH—*continued*

SUMMARY OF ALTERATION—*continued*

Type	Range	Plate	Description	Number per Vehicle	Austin Part Number	Parts List Publication Number
Austin-Healey 100 A 70 (Pick-up)	E.136894–214144 E.66501–215343	A26	Flywheel with starter gear and dowels Dowels for clutch	1 2	1B 1987 1B 1460	Pub. 1050, Engine, p. 4 730, p. 8 853, p. 7
Austin-Healey 100 A 70 (Pick-up)	E.214145 on E.215344 on		Flywheel with starter gear and dowels Dowels for clutch	1 2	1B 2978 1G 2984	
A 70 (Except Pick-up)	E.35320–217378		Flywheel with starter gear and dowels Dowels for clutch	1 2	1B 1985 1B 1460	Pubs. 603A, p. 9 780A, p. 7
	E.217379 on		Flywheel with starter gear and dowels Dowels for clutch	1 2	1B 2977 1G 2984	
Taxi and Hire-Car	E.17800–211301		Flywheel with starter gear Dowels, flywheel to clutch	1 2	1F 1356 1B 1460	Pubs. 558A, p. 8 728, p. 7
	E.211302 on		Flywheel with starter gear Dowels, flywheel to clutch	1 2	1F 1526 1G 2984	
A 125 and A 135	To E.*		Flywheel with starter gear Dowels, flywheel to clutch	1 2	1D 1526 1K 1754	Pubs. 430A, p. 8 779, p. 8 624, p. 7
	E.* on		Flywheel with starter gear Dowels, flywheel to clutch	1 2	1D 1959 1D 1960	

*To be published at a later date.

AUSTIN SERVICE JOURNAL

B.M.C. 2·2-LITRE DIESEL ENGINE

16-H.P. Austin Taxi and Hire-Car

This issue of the Austin Service Journal—Cars (Volume 24, issue 10) incorporates a list of parts for the B.M.C. 2.2-litre Diesel engine, also instructions and modifications necessary for converting a 16-H.P. Taxi or Hire-Car to diesel-power.

Recommendations for initial parts stocking are available upon request.

Printed in England, October 11, 1954

PLATE A

SPL 153

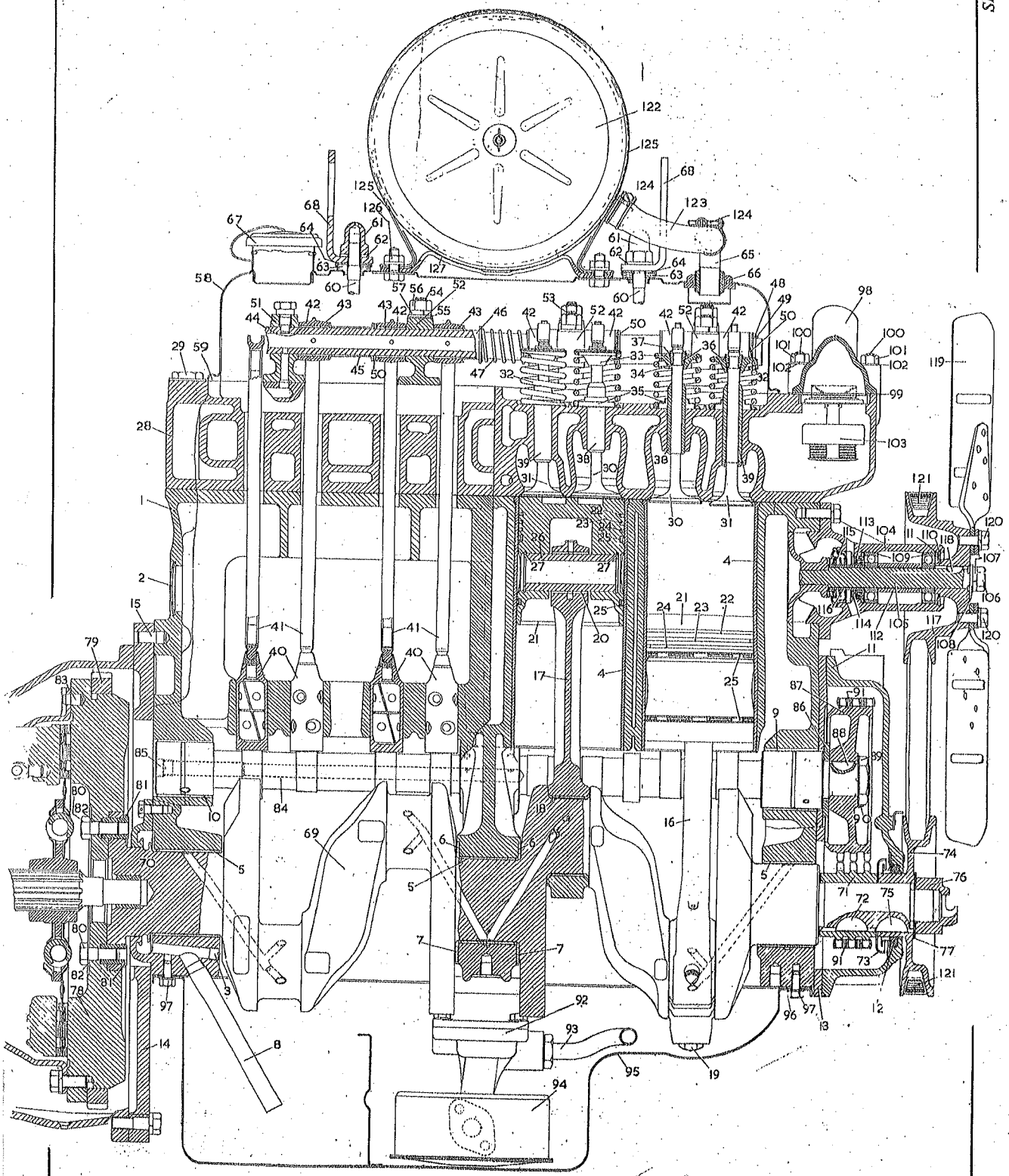

B.M.C. 2.2-LITRE DIESEL ENGINE PARTS LIST

Plate	Description	Number per Vehicle	Part Number
	ENGINE UNIT		
	***Stripped engine unit with injection pump and injectors**	1	8G 272
	CYLINDER BLOCK		
A1	**Cylinder block with pistons, bearings, caps, bushes, plugs and studs.**	1	58G 340
A2	Welch plugs for cylinder block	5	2K 8169
	Restrictor for camshaft bearing oil feed	1	1G 1165
	Restrictor for tensioner oil feed	1	1A 1964
	Plugs for oil pump spindle bore	1	1K 115
	Washer for plug	1	6K 432
	Plugs for oilways and water gallery	5	2K 6650
	Taper plugs for main oil channel	2	2K 6649
	Plugs (cork) for front and rear bearing caps	4	2K 7347
A3	Screwed plug for rear bearing cap	1	2K 4608
A4	**Cylinder liners**	4	11B 46
	Drain tap	1	2H 764
	Joint washer, $\frac{1}{16}$" thick } Optional thickness	1	2K 4954
	Joint washer, $\frac{3}{32}$" thick } to determine position	1	2K 4975
A5	**Main half bearings (standard)**	1 set	8G 2115
	Main half bearings (.010" u/s)	1 set	8G 2115A
	Main half bearings (.020" u/s)	1 set	8G 2115B
	Main half bearings (.030" u/s)	1 set	8G 2115C
	Main half bearings (.040" u/s)	1 set	8G 2115D
A6	**Thrust washers—upper**	2	11B 37
A7	**Thrust washers—lower**	2	11B 38
	Studs for main bearing caps	6	11B 31
	Nuts for studs	6	5HK 1426
	Spring washers	6	2K 5949
A8	**Drain pipe in rear bearing cap**	1	1K 585
	Joint washer for rear main bearing cap	1	1K 1515
A9	**Liner for camshaft bearing, front**	1	1B 1030
	Liner for camshaft bearing, middle	1	1K 64
A10	**Liner for camshaft bearing, rear**	1	1K 66
A11	**Front cover with oil catcher and felt**	1	11B 39
A12	Felt	1	2K 7139
	Joint washer	1	11B 45
	Setscrews, cover and front plate to cylinder block	8	HBZ 0520
	Plain washers	8	PNZ 105
	Setscrew, cover and front plate to cylinder block	1	HBZ 0602
	Plain washer	1	PWZ 106
	Setscrew, cover to front plate	1	HBZ 0518
	Plain washer	1	PWZ 105
	Bolts, cover to front plate	2	HBZ 0520
	Nuts for bolts	2	FNZ 105
	Spring washers	2	LWZ 205

*Can be supplied reconditioned on Home Market, quote part number 8G 272R

Continued

B.M.C. 2.2-LITRE DIESEL ENGINE PARTS LIST—*continued*

Plate	Description	Number per Vehicle	Part Number
A13	**Engine front plate with bolts for injection pump**	1	11B 47
	Joint washer	1	11B 55
	Setscrews, front plate to cylinder block	6	HZS 0608
	Spring washers	2	LWZ 206
	Lockwasher	1	2K 5774
	Lockwasher	1	11B 13
	Cylinder side cover	1	1B 1436
	Joint washer	1	1B 1439
	Setscrews, long	14	HZS 0406
	Setscrew, short	1	HZS 0404
	Fibre washers	15	2K 4974
	Crankcase vent pipe with flange and clip	1	1F 1413
	Joint washer for flange	1	1K 99
	Setscrews to side cover	2	2K 3046
	Spring washers	2	LWZ 204
	Setscrew for clip	1	HZS 0506
	Spring washer	1	2K 5319
	Crankcase rear cover	1	1K 47
	Joint washer	1	1D 1651
	Setscrews to cylinder block	3	53K 1028
	Locking wire	1	2K 6954
A14 A15	**Engine rear plate**	1	11B 240
	Dowels for rear plate	2	1K 52
	Joint washer for rear plate	1	1D 1652
	Joint washer for rear plate, top	1	1K 88
	Setscrews, rear plate to cylinder block	8	HZS 0607
	Spring washers	8	LWZ 206
	Setscrews, rear plate to rear main bearing cap	2	HZS 0506
	Spring washers	2	LWZ 205
	FRONT ENGINE MOUNTINGS		
	Engine support bracket, right hand	1	11B 172
	Engine support bracket, left hand	1	11B 173
	Engine mounting bracket, right hand	1	11B 170
	Bolts to front plate	3	HBZ 0622
	Nuts for bolts	3	FNZ 106
	Spring washers	3	LWZ 106
	Engine mounting bracket, left hand	1	11B 171
	Bolts to front plate	2	HZS 0609
	Nuts for bolts	2	FNZ 106
	Spring washers	2	LWZ 106
	Studs, in cylinder block, for brackets	4	53K 2231
	Nuts for studs	4	FNZ 106
	Spring washers	4	LWZ 106
	Rubber mounting buffers with studs	2	1B 1311
	Nuts	2	2K 3976
	Spring washers	2	LWZ 105
	Rubber mounting with studs	2	1B 1187
	Nuts	8	2K 3978
	Spring washers	4	LWZ 107
	Engine mounting bracket	1	11B 171
	Bolts to frame brackets	8	2K 5946
	Nuts for bolts	8	2K 3977
	Spring washers	8	2K 5895

Continued

B.M.C. 2.2-LITRE DIESEL ENGINE PARTS LIST—*continued*

Plate	Description	Number per Vehicle	Part Number
	CONNECTING RODS AND PISTONS		
A16	**Connecting rods with cap less bearing, for numbers 1 and 3 cylinders**	2	11B 65
A17	**Connecting rods with cap less bearing, for numbers 2 and 4 cylinders**	2	11B 63
A18	Half bearings (standard)	1 set	8G 2116
	Half bearings (.010″ u/s)	1 set	8G 2116A
	Half bearings (.020″ u/s)	1 set	8G 2116B
	Half bearings (.030″ u/s)	1 set	8G 2116C
	Half bearings (.040″ u/s)	1 set	8G 2116D
A19	Setscrews	8	11B 71
	Lockwashers	4	11B 72
A20	Bushes for gudgeon pin	4	11B 68
A21	**Pistons assembled with rings and gudgeon pin (standard)**	4	11B 73
	Pistons assembled with rings and gudgeon pin (.010″ o/s)	4	11B 73F
	Pistons assembled with rings and gudgeon pin (.020″ o/s)	4	11B 73A
	Pistons assembled with rings and gudgeon pin (.030″ o/s)	4	11B 73B
A22	Compression rings (standard)—top ring	4	11B 75
	Compression rings (.010″ o/s)—top ring	4	11B 75F
	Compression rings (.020″ o/s)—top ring	4	11B 75A
	Compression rings (.030″ o/s)—top ring	4	11B 75B
A23	Compression rings (standard)—2nd ring	4	11B 76
	Compression rings (.010″ o/s)—2nd ring	4	11B 76F
	Compression rings (.020″ o/s)—2nd ring	4	11B 76A
	Compression rings (.030″ o/s)—2nd ring	4	11B 76B
A24	Compression rings (standard)—3rd ring	4	11B 77
	Compression rings (.010″ o/s)—3rd ring	4	11B 77F
	Compression rings (.020″ o/s)—3rd ring	4	11B 77A
	Compression rings (.030″ o/s)—3rd ring	4	11B 77B
A25	Scraper rings (standard)	8	11B 78
	Scraper rings (.010″ o/s)	8	11B 78F
	Scraper rings (.020″ o/s)	8	11B 78A
	Scraper rings (.030″ o/s)	8	11B 78B
A26	Gudgeon pins	4	11B 79
A27	Circlips for gudgeon pins	8	11B 169
	CYLINDER HEAD, VALVES, TAPPETS AND ROCKER GEAR		
	Cylinder head assembled with valves and rocker gear	1	11B 210
	***Cylinder head with valves less rocker gear (use 58G 338A with 11B 287 and 11B 288)**	1	58G 338
	†Cylinder head with valves less rocker gear	1	58G 338A
A28	***Cylinder head with valve guides, plugs and studs (use 58G 339A with 11B 287 and 11B 288)**	1	58G 339
	†Cylinder head with valve guides, plugs and studs	1	58G 339A
A29	Screwed plug, heater outlet	1	2K 4996
	Fibre washer	1	2K 5629
	Plugs for water jet boss	2	6K 874
	Welch plug for centre water jet boss	1	2K 8169
	Plug for oil hole	1	6K 784
	Plugs for air vent boss	2	11G 14
	Combustion chamber inserts	4	11B 22
	Joint washer	1	11B 23
	Studs, for cylinder head, in cylinder block, long	15	51K 241
	Studs, for cylinder head, in cylinder block, short	10	51K 242
	Nuts for studs	25	FNZ 507
	Washers	25	PWZ 107
	Heater plugs	4	11B 324
	Plug connections, 1 to 2, 3 to 4 cylinders	2	11B 130
	Plug connections, 2 to 3 cylinders	1	11B 131
	Earthing connection, heater plugs to cylinder head	1	11B 325
A30	**Inlet valves**	4	1B 1805

*To E.1078. †E.1079 on.

Continued

B.M.C. 2.2-LITRE DIESEL ENGINE PARTS LIST—*continued*

Plate	Description	Number per Vehicle	Part Number
A31	**Exhaust valves**	4	11B 117
A32	Valve springs	8	1B 2814
A33	Valve spring cups	8	11B 263
A34	Valve oil seals (rubber)	8	AEK 113
A35	Valve spring bottom collars	8	1B 1811
A36	Valve cotters	8	1K 800
A37	Circlips for valve cotters	8	1K 372
A38	**Valve guides—inlet**	4	1B 1807
A39	**Valve guides—exhaust**	4	11B 20
A40	**Tappets**	8	1B 1354
A41	**Push rods**	8	11B 133
A42	**Valve rockers with bush and adjusting screw**	8	1D 1894
A43	Bushes for valve rockers	8	1B 1490
	Adjusting screws	8	ALT-57
	Locknuts	8	2K 8070
A44	**Valve rocker shaft with plugs**	1	11B 118
	Plug	1	2K 6344
	Screwed plug	1	2K 6534
A45	Distance pieces	2	11B 123
A46	Distance piece—centre	1	1K 22
A47	Spring	1	2K 5923
A48	Washers	2	2K 5066
A49	Split pins	2	OPS 0310
A50	Double coil spring washers	4	2K 2561
A51	**Valve rocker bracket, with tapped hole**	1	11B 120
	Locating screw for shaft	1	11B 122
	Washer—fibre	1	2K 5930
A52	**Valve rocker brackets, without tapped hole**	3	11B 121
A53	Studs in cylinder head (short)	4	51K 2240
A54	Studs in cylinder head (long)	4	51K 2241
A55	Plain washers for studs	8	PWN 106
A56	Nuts for studs	8	FWN 506
A57	Spring washers	8	LWN 106
A58	**Valve rocker cover with oil filler cap and vent pipe**	1	11B 341
A59	Joint washer	1	1B 1247
A60	Studs	2	11B 124
A61	Cap nuts	2	11B 129
A62	Washers for cap nuts	2	PWZ 106
A63	Bushes, rubber	2	6K 515
A64	Cup washers	2	1A 2156
A65	**Vent pipe for rocker cover**	1	1B 2258
A66	Locknut	1	1B 2261
A67	**Oil filler cap and cable**	1	ALT-110
A68	**Engine sling brackets**	2	1B 2287
	CRANKSHAFT AND GEAR		
A69	**Crankshaft with bush**	1	11B 245
A70	Bush for 1st motion shaft	1	1K 369
A71	**Crankshaft gear**	1	11B 88
A72	Key	1	2K 5578
A73	**Crankshaft oil thrower**	1	1G 838

Continued

B.M.C. 2.2-LITRE DIESEL ENGINE PARTS LIST—*continued*

Plate	Description	Number per Vehicle	Part Number
A74	**Crankshaft pulley**	1	11B 148
A75	Key	1	2K 5578
A76	**Starting nut**	1	1B 1061
A77	Lockwasher	1	2H 731
	STARTING HANDLE		
	Starting handle	1	1F 1402
	Starting handle guide tube with brackets	1	1F 1284
	Rubber bush	1	1F 1288
	Clip	1	1F 1289
	Setscrews, tube to frame cross member	2	2K 3046
	Bolts, tube to body member	4	2K 3046
	Nuts for bolts	4	2K 3973
	Spring washers	6	2K 1210
	FLYWHEEL		
A78	*Flywheel with starter gear and dowels	1	11B 84
A79	Starter gear	1	11B 86
A80	Bolts to crankshaft	6	51K 1029
A81	Nuts for bolts	6	11B 93
A82	Lockwashers	3	2K 5730
A83	Dowels	2	1D 1960
	CAMSHAFT AND GEAR		
A84	**Camshaft with oil feed nozzles and plug**	1	11B 82
	Oil feed nozzles	2	1K 1441
A85	Plug	1	2K 6534
A86	Locating plate	1	1K 624
	Setscrews to crankcase	2	HZS 0507
	Lockwasher	1	11B 57
A87	**Camshaft gear**	1	11B 87
A88	Key	1	2K 2129
A89	Nut for camshaft	1	2K 7681
A90	Lockwasher	1	1B 1219
	Packing washer	as required	2K 8725
A91	**Chain for camshaft gear**	1	11B 92
	Chain tensioner	1	11B 90
	Setscrews	2	HNS 0507
	Lockwashers	2	2K 5686
	Shims	as required	11B 91
	OIL PUMP AND RESERVOIR		
A92	†Oil pump assembly	1	11B 94
	Oil pump body	1	7H 1661
	Locating screw to crankcase	1	11B 96
	Cap nut	1	11B 97
	Washer (fibre)	1	2K 6958
	Bottom cover	1	7H 1803
	Setscrews	4	HNS 0406
	Spring washers	4	LWN 104

*Can be supplied reconditioned on Home Market, quote part number 11B 84R

†Can be supplied reconditioned on Home Market, quote part number 11B 94R

Continued

B.M.C. 2.2-LITRE DIESEL ENGINE PARTS LIST—*continued*

Plate	Description	Number per Vehicle	Part Number
	Oil pump shaft with thrust washer	1	K7-11
	Inner and outer rotors	1 pair	B3-602
	Key, inner rotor to shaft	1	7H 1657
A93	**Oil delivery pipe with gland nut**	1	11B 98
	Oil release valve	1	1G 1452
	Spring	1	6K 853
	Plug in crankcase	1	2K 8377
	Washer for plug	1	6K 431
A94	**Oil strainer**	1	1G 2390
	Joint washer	1	1G 2342
	Setscrews	2	HBN 0415
	Spring washers	2	LWN 204
	Oil strainer body	1	1G 2391
	Oil strainer bottom cover	1	1K 853
	Distance piece	1	1K 1382
	Bolt	1	51K 1366
	Nut for bolt	1	FNN 105
	Shakeproof washer	1	2K 8606
A95	**Oil reservoir**	1	11B 100
A96	Joint washer	1	1B 2923
A97	Setscrew assemblies	21	6K 639
	Setscrew for oil reservoir to rear main bearing cap	1	HZS 0404
	Fibre washer for setscrew	1	2K 6337
	Plug	1	2K 4685
	Washer	1	6K 431
	Oil dipper rod	1	11G 64
	Tube for rod	1	1B 1063
	Dust cap	1	1B 1735
	EXHAUST, INDUCTION AND EXHAUST MANIFOLDS		
	Exhaust manifold less studs	1	11B 135
	Induction manifold less studs	1	11B 136
	Joint washer	1	11B 127
	Yokes for manifolds	4	1B 1369
	Studs, in cylinder head, for manifold	2	53K 2213
	Studs, in cylinder head, for manifold	4	53K 2215
	Nuts for studs	6	51K 1533
	Washers for studs	6	PWZ 106
	WATER OUTLET ELBOW AND THERMOSTAT		
A98	***Water outlet elbow**	1	11B 128
A99	*Joint washer	1	1A 2149
	†Water outlet elbow	1	11B 287
	†Joint washer	1	11B 288
A100	Studs, pipe to cylinder head	3	52K 531
A101	Nuts for studs	3	FNZ 105
A102	Washers	3	PWZ 105
	Thermostat	1	3H 823
A103	Joint washer	1	1G 1365
	Retaining ring	1	11B 126
	Thermal transmitter Early fitting	1	3H 2836
	Gland nut Early fitting	1	3H 2837
	Plug for thermal transmitter boss	1	1G 2953
	Washer for plug	1	1B 3664

*To E.1078. †E.1079 on

Continued

B.M.C. 2.2-LITRE DIESEL ENGINE PARTS LIST—*continued*

Plate	Description	Number per Vehicle	Part Number
	WATER PUMP		
	Water pump assembly	1	11B 204
	Joint washer	1	AEC 216
	Setscrews to crankcase	4	HZS 0507
	Spring washers	4	LWZ 205
	Plug	1	52K 1452
	Fibre washer for plug	1	2K 4973
A104	**Water pump body**	1	11B 146
A105	**Spindle with vane**	1	AEC 13
A106	Nut for spindle	1	52K 314
A107	Spring washer	1	LWN 107
A108	Plain washer	1	PWN 107
A109	**Ball bearings,** $\frac{5}{8}'' \times 1\frac{9}{16}'' \times \frac{7}{16}''$	2	6K 803
A110	Spring ring	1	1K 759
A111	Grease retainer	1	AEC 214
A112	Distance piece	1	1K 756
A113	**Oil seal**	1	2H 4500
A114	Housing for oil seal	1	1B 1424
A115	**Water pump seal**	1	8G 627
A116	Distance piece	1	AEC 211
A117	**Pulley for fan and pump**	1	11B 149
A118	Key	1	2K 2123
	FAN		
A119	**Fan blades**	2	1K 2269
A120	Setscrews	4	HZS 0506
	Spring washers	4	LWZ 105
A121	**Fan belt**	1	2H 3591
	DYNAMO AND STARTER		
	Pulley for dynamo	1	1B 1114
	Fan for dynamo	1	1B 2178
	Dynamo	1	3H 1834
	Setscrew to adjusting link	1	3H 2092
	Spring washer	1	2K 5319
	Bolt	1	HBZ 0522
	Bolt to bracket	1	HBZ 0510
	Nuts for bolts	2	LNZ 205
	Spring washers	2	LWZ 205
	Dynamo bracket	1	1A 2210
	Studs, bracket to crankcase	2	52K 525
	Nuts for studs	2	FNZ 105
	Spring washers	2	LWZ 205
	Mounting pillar on engine front plate	1	11B 154
	Adjusting link for dynamo	1	11B 153
	Nut for link	1	LNZ 205
	Washer	1	PWZ 205
	Spring washer	1	LWZ 205
	Starter	1	11B 152
	Studs in gearbox	3	11B 247
	Nuts for studs	3	FNZ 506
	Spring washers	3	LWZ 206
	Bracket, for operating cable, on starter	1	11B 274

Continued

B.M.C. 2.2-LITRE DIESEL ENGINE PARTS LIST—*continued*

Plate	Description	Number per Vehicle	Part Number
	VENTURI UNIT AND AIR CLEANER		
	Venturi control unit	1	11B 50
	Joint washer	1	11B 141
	Studs in manifold	2	53K 603
	Nuts for studs in manifold	2	FNZ 106
	Spring washers	2	LWZ 106
	Vacuum pipe, venturi to governor	1	11B 224
	Banjo union	1	11B 227
	Banjo bolt	1	11B 228
	Washers—copper	2	11B 229
A122	**Air cleaner and intake silencer**	1	3H 1144
A123	Rubber connection, air cleaner to valve rocker cover	1	11B 270
A124	Clips	2	2H 3920
A125	Strap, with rubber pad, for air cleaner	1	11B 267
	Rubber pad, for strap	1	11B 268
	Bifurcated rivets	5	BRP 1106
A126	Nuts for bolts in valve rocker cover	2	FNZ 105
	Spring washers	2	LWZ 205
A127	**Cradle, with rubber pad, for air cleaner**	1	11B 269
	Rubber pad	1	1B 1294
	Bifurcated rivets	2	BRP 1106
	Rubber connection for air cleaner to venturi unit	1	11B 271
	Clips for rubber connection	2	2H 3738
	OIL FILTER AND PRESSURE PIPE		
	Oil filter (Tecalemit)	1	1B 2897
	Filtering element	1	2H 4340
	Sealing ring synthetic rubber, container to head	1	7H 1755
	Felt washer element clamping plate to head	1	7H 1756
	Circlip for clamping plate	1	7H 157
	Felt washer for element pressure plate	1	7H 1758
	Centre bolt	1	7H 1762
	Sealing washer synthetic rubber, for centre bolt	1	7H 1759
	Oil filter (Purolator)	1	3H 1287
	Filtering element	1	P 101
	Joint washer for head	1	7H 24
	Relief valve spring	1	7H 27
	Washer for relief valve	1	7H 22
	Seal for sump	1	7H 30
	Seal for element guide, lower	1	7H 28
	Joint washer	1	1B 1233
	Setscrews to crankcase	2	HBZ 0632
	Plain washers	2	PWZ 106
	Spring washers	2	LWZ 106
	Oil pressure pipe with clips, union, nut and nipple	1	1F 1378
	Union in crankcase	1	6K 22
	Washer for union	1	2K 4954
	Washer for nipple, gauge end	1	2K 4936
	Ferrule, rubber	1	3B 50
	Bolt for clip to toeboard	1	2K 3001
	Nut for screw	1	2K 4012
	Spring washer	1	2K 1209
	Flexible oil gauge pipe	1	1A 1939

Alternative to 3H 1287

Alternative to 1B 2897

Continued

B.M.C. 2.2-LITRE DIESEL ENGINE PARTS LIST—*continued*

Plate	Description	Number per Vehicle	Part Number
	ENGINE STARTER AND CLUTCH CONTROLS		
	ENGINE CONTROLS		
	Accelerator pedal	1	1F 1294
	Setscrew	1	2K 6028
	Accelerator shaft and lever	1	1F 2806
	Felt	1	1A 1832
	Cup for felt	1	1H 55
	Accelerator shaft support	1	1F 657
	Setscrews, support to dash	2	2K 3047
	Spring washers	2	LWN 204
	Bearing for accelerator shaft } Alternatives	1	1K 2173
	Bearing for accelerator shaft } Alternatives	1	1K 133
	Setscrew, bearing to dash	1	2K 3046
	Bolt for pedal bearing and hand adjuster bracket	1	2K 3046
	Nut for bolt	1	2K 3975
	Spring washers	2	LWN 204
	Accelerator pedal return spring	1	1F 2792
	Hand adjuster with bracket, knob, screw and spring	1	1F 1237
	Bracket	1	1F 1238
	Bolts for bracket	2	2K 3046
	Nuts for bolts	2	2K 3975
	Spring washers	2	LWN 204
	Knob	1	1B 380
	Screw	1	1B 381
	Spring	1	2K 6588
	Throttle shaft with lever	1	1F 2808
	Throttle shaft bearing, rubber and brass	1	1G 2175
	Bracket for bearing	1	1F 2811
	Setscrews, bracket to dash	2	PMZ 0308
	Nuts for setscrews	2	FNZ 103
	Spring washers	2	LWZ 103
	Control rod, accelerator lever to throttle shaft lever	1	1F 2813
	Ball joints for control rod	2	1IB 2044
	Nuts for ball joints	3	FNZ 103
	Universal coupling for throttle shaft	1	3H 1841
	Engine stop control	1	1F 8328
	Nut, stop control cable to instrument panel	1	2K 8782
	Fibre washer for nut	1	2K 7502
	Grommet in instrument panel	1	3F 90
	Nut	1	2K 8782
	Washer	1	2K 7502
	Engine stop lever	1	1IB 232
	Fulcrum pin	1	1IB 157
	Washer	1	PWZ 105
	Spring washer	1	2K 2543
	Split pin	1	CPS 0308
	Trunnion for stop lever	1	1IB 158
	Washer	1	PWZ 103
	Split pin	1	CPS 0208
	Setscrew	1	PMZ 0204
	Control rod	1	2K 5406
	Locknut	1	2K 4018
	Ball joints	2	2H 23
	Nuts for ball joints	2	2K 3975
	Spring washers	2	LWZ 104

Continued

B.M.C. 2.2-LITRE DIESEL ENGINE PARTS LIST—*continued*

Plate	Description	Number per Vehicle	Part Number
	Bracket for stop lever control cable	1	11B 234
	Setscrews, bracket to crankcase	2	HZS 0504
	Spring washers	2	LWZ 105
	Cable stop for lever control	1	11B 159
	Nut for cable stop	1	FNZ 105
	Spring washer	1	LWZ 104
	STARTER CONTROLS		
	Starter lever	1	1K 2924
	Knob for lever	1	2F 5013
	Joint pin, lever to hinge bracket	1	2K 5185
	Split pin	1	CPS 0306
	Hinge bracket	1	1K 2928
	Bolts to starter control bracket	2	HNS 0405
	Nuts for bolts	2	FNZ 104
	Spring washers	2	LWZ 104
	Starter control bracket	1	1F 2795
	Starter control cable	1	1F 2797
	Fork	1	JF 2800
	Locknut	1	FNZ 204
	Joint pin, fork to starter lever	1	2K 5556
	Split pin	1	CPS 0205
	Joint pin, cable to starter motor	1	2K 5556
	Plain washer	1	PWZ 104
	Spring washer	1	2K 2543
	Split pin	1	CPS 0205
	CLUTCH CONTROLS		
	Clutch pedal pad and stalk	1	1F 3451
	Clamp bolt to lever	1	2K 3094
	Spring washer	1	2K 5319
	Rubber pad for pedal	1	1B 5054
	Washer (steel and leather)	1	1K 8372
	Clutch pedal shaft	1	1F 3522
	Lever for shaft	1	1H 5196
	Distance washer	1	1A 4685
	Nut for shaft	1	2K 3979
	Spring washer	1	2K 5897
	Clutch pedal lever	1	1F 8335
	Cotter	1	2K 5639
	Nut for cotter	1	2K 3975
	Washer	1	2K 1202
	Bracket for pedal shaft, with bushes	1	1F 3443
	Bushes	2	1A 4692
	Washers	2	6K 472
	Greaser	1	2H 2794
	Bolts to frame	3	2K 3094
	Nuts for bolts	3	2K 3976
	Spring washers	3	2K 5319
	Clutch pedal adjusting lever	1	1F 3446
	Adjusting screw	1	2K 6219
	Locknut	1	2K 3976
	CLUTCH		
	Clutch operating shaft	1	1F 3448
	Nut for shaft	1	2K 3979
	Spring washer	1	LWN 208
	Lever for clutch operating shaft, upper	1	1H 3057
	Shakeproof washer	1	2K 8073
	Washer	1	2K 5116

Continued

B.M.C. 2.2-LITRE DIESEL ENGINE PARTS LIST—*continued*

Plate	Description	Number per Vehicle	Part Number
	Lever for clutch operating shaft, lower	1	1H 3058
	Clamp bolt	1	2K 3140
	Nut for bolt	1	2K 3977
	Washer	1	2K 1204
	Spring washer	1	LWN 106
	Bushes for shaft, in gearbox casing	2	1E 3590
	Grease nipples	2	2H 2942
	Fibre washers	2	2K 4956
	Clutch connection rods with sockets	2	B3-530
	Thrust blocks, fixed	4	1D 3590
	Springs	4	6K 684
	Thrust blocks, loose	4	1D 3591
	Split pins	4	2K 1233
	Ball pins	4	1B 3410
	Nuts for ball pins	4	2K 3977
	Spring washers	4	2K 5863
	Clutch withdrawal fork	1	1F 3447
	Cotters	2	2K 6385
	Nuts	2	2K 3975
	Spring washers	2	LWN 204
	Return spring, on shaft, right hand	1	1F 3449
	Return spring, on shaft, left hand	1	1F 3450
	Clutch withdrawal bearing assembled with collar, oil thrower, bearing, felt washer, and retainers	1	B3-631
	Housing with thrust buttons	1	1F 5515
	Thrust buttons—bakelite	2	1F 3484
	Collar	1	1F 3432
	Spring ring for collar	1	1F 3436
	Ball bearing, $2\frac{1}{8}$" × $3\frac{7}{16}$" × $\frac{5}{8}$", 3 dot	1	2K 8093
	Spring ring for bearing	1	1F 3455
	Oil thrower	1	2K 8102
	Felt washer	1	2K 8103
	Felt washer retainer (inner)	1	1F 3434
	Felt washer retainer (outer)	1	1F 3433
	Flexible lubricating pipe for bearing	1	1F 3437
	Bush	1	2K 5553
	Nut for pipe	1	1E 5799
	Fibre washer	1	2K 4956
	Grease nipple	1	2H 2794
	Clamping plate for pipe	1	1E 3639
	Setscrew	1	2K 92
	Spring washer	1	LWN 205
	Clutch cover assembly	1	7H 3232
	Screws to flywheel	6	HNS 0607
	Spring washers	6	LWN 106
	Clutch plate with linings	1	7H 3234
	Linings with rivets	1 set	7H 3139
	Pressure plate	1	7H 3102
	Thrust springs, light green	12	7H 3233
	Release levers	3	7H 3167
	Plate for levers	1	7H 3079
	Retainer wires	3	7H 3001
	Struts	3	7H 3069
	Pins	3	7H 3067
	Eye bolts (Supplied together)	3	7H 3195
	Nuts for eye bolts (Supplied together)	3	7H 3193
	Anti-rattle springs	3	7H 3092

Continued

B.M.C. 2.2-LITRE DIESEL ENGINE PARTS LIST—*continued*

Plate	Description	Number per Vehicle	Part Number
	FUEL INJECTION PUMP		
B1	***Fuel injection pump**	1	11B 49
	Joint washer	1	11B 107
	Shims, .005" thick	as required	11B 108
	Shims, .010" thick	as required	11B 109
	Nuts for bolts in engine front plate	3	FNZ 106
	Washers	3	FWZ 106
B2	**Gear for injection pump**	1	11B 102
B3	Key	1	2K 2125
B4	Nut for gear to spindle	1	11B 103
B5	Lockwasher	1	11B 106
B6	**Ball journal bearing, 30 × 62 × 16 mm., 3-dot**	1	11B 14
B7	Clamping collar	1	11B 104
B8	Cover for bearing	1	11B 42
B9	Joint washer	1	11B 43
	Setscrews, cover to engine front cover	4	HZS 0405
	Fibre washers	4	2K 4974

*Can be supplied reconditioned on Home Market, quote part number 11B 49R

PLATE B

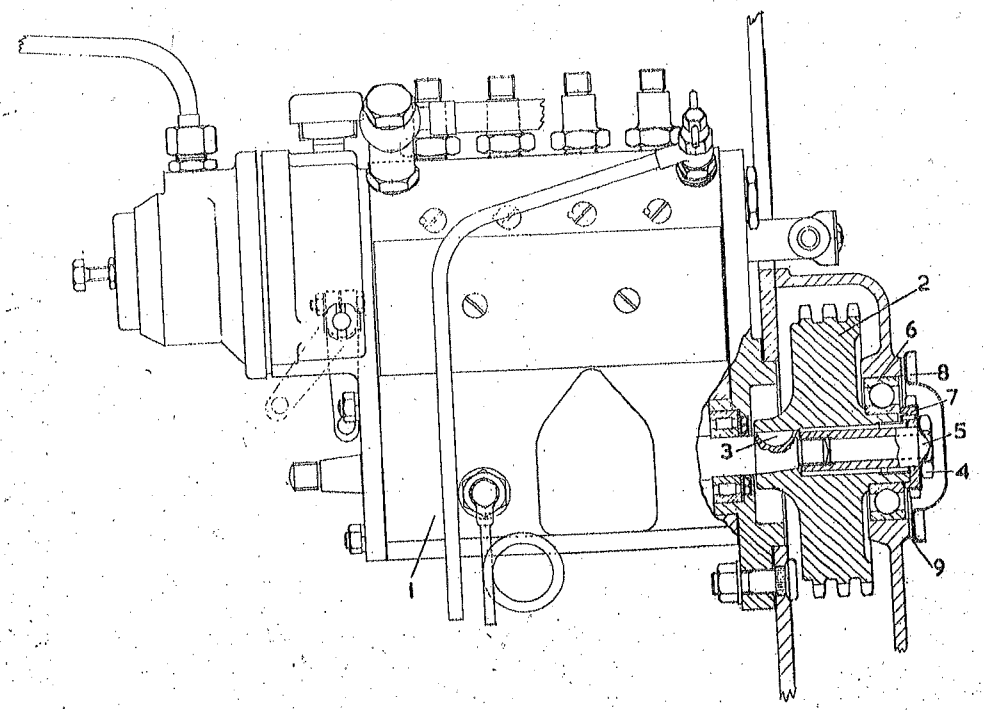

SPL 154

Continued

B.M.C. 2.2-LITRE DIESEL ENGINE PARTS LIST—*continued*

Plate	Description	Number per Vehicle	Part Number
	FUEL LIFT PUMP AND FUEL FILTER		
	Fuel lift pump	1	11B 150
	Joint washer	1	1E 504
	Studs in crankcase	2	52K 547
	Nuts for studs	2	FNZ 105
	Washers	2	PWZ 105
	Fuel filter	1	11B 53
	Adaptor	1	11B 230
	Setscrews, filter to cylinder head	2	HBZ 0813
	Packing piece	1	11B 125
	Washers	2	PWZ 108
	Spring washers	2	LWZ 108
	Fuel pipe with unions, lift pump to filter	1	11B 212
	Banjo bolt	1	11B 54
	Washers copper	2	11B 202
	Banjo bolt	1	1B 1203
	Washers fibre	2	2K 7483
	Flexible fuel pipe, filter to injection pump	1	8G 628
	Union	1	11B 198
	Banjo bolts	2	11B 54
	Washers copper	4	11B 202
	INJECTORS AND FUEL PIPES		
	***Injector assemblies**	4	11B 249
	Joint washers	4	11B 276
	Studs in cylinder head	8	53K 2196
	Nuts for studs	8	FNZ 105
	Spring washers	8	LWZ 105
	Nozzle holder assemblies	4	11B 51
	Nozzle assemblies	4	11B 52
	Fuel pipe to No. 1 injector	1	11B 214
	Fuel pipe to No. 2 injector	1	11B 216
	Fuel pipe to No. 3 injector	1	11B 218
	Fuel pipe to No. 4 injector	1	11B 220
	Clamps large, for fuel pipes	2	11B 282
	Clamps small, for fuel pipes	2	11B 285
	Bushes	6	11B 284
	Bolts for clamps	4	HZS 0405
	Nuts for bolts	4	ANZ 104
	Spring washers	4	LWZ 104
	Leak-off pipe	1	11B 176
	Banjo bolts	5	11B 207
	Washers copper	10	11B 206
	Drain pipe, for injection pump cambox	1	11B 208
	Banjo bolt	1	11B 207
	Washers copper	2	11B 206
	Air pipe for injection pump	1	11B 111

*Can be supplied reconditioned on Home Market, quote part number 11B 249R

CHASSIS PARTS (REPLACING EXISTING PARTS)

Plate	Description	Number per Vehicle	Part Number
	GEARBOX		
	Gearbox assembly	1	1F 3527
	Gearbox casing		
	Setscrews to mounting plate	1	5BG 342
	Dowel bolts to mounting plate	5	2K 3141
	Nuts for bolts	2	11B 248
	Spring washers	2	FNZ 106
		7	LWZ 206
	STEERING		
	Steering gear less arm and wheel	1	1F 6202
	Steering box bracket		
	Bolt to frame	1	1F 6203
	Setscrews to frame	1	6K 59
	Lockwashers	2	2K 5607
		3	2K 8772
	Steering arm	1	1F 6200
	Side cover		
	Setscrew, $\frac{1}{16}$" B.S.F. countersunk	1	7H 6491
		1	7H 6493
	Bottom end cover with adaptor		
	Setscrews, $\frac{1}{16}$" B.S.F.	1	7H 6492
		4	7H 6027
	EXHAUST		
	Exhaust pipe		
	Studs in exhaust manifold	1	1F 2801
	Nuts for studs	3	53K 2173
		3	51K 1532
	Silencer and tail pipe	1	1F 2802
	RADIATOR AND FITTINGS		
	***Radiator with cap**	1	1F 2780
	Radiator top hose, rubber	1	1D 1345
	Radiator bottom hose, rubber		
	Clips for bottom connection	1	1F 2781
	Plug for bottom hose heater connection	2	8G 632
	Clip for plug	1	1F 2782
		1	ALT-21
	Stay for radiator bottom hose		
	Clip for stay	1	1F 2804
	Bolt, stay to clip	1	1F 2805
	Nut	1	HZS 0404
		1	FNZ 104
	Radiator bracket, right hand	1	1F 2783
	Radiator bracket, left hand	1	1F 2784
	HYDRAULIC JACKS		
	Distributor box bracket	1	1F 8334
	TOOL KIT		
	Tool kit (small tools)	1	1F 8339
	Grease gun	1	1F 8324
	Injection pump flange nut spanner	1	1F 8336
	Injection pump gear extractor	1	1F 8337

*Can be supplied reconditioned on Home Market, quote part number 1F 2780R

Continued

CHASSIS PARTS (REPLACING EXISTING PARTS)—*continued*

Plate	Description	Number per Vehicle	Part Number
	JOINT WASHER SETS		
	Engine joint washer set for complete overhaul	1	58G 343
	Engine joint washer set for decarbonising	1	58G 344
	ELECTRICAL EQUIPMENT AND WIRING		
	Wiring harness, R.H. Steering	1	1F 9010
	Wiring harness, L.H. Steering	1	1F 9023
	Chassis harness, R.H. Steering	1	2H 4514
	Chassis harness, L.H. Steering	1	3H 1267
	Cable harness, left hand, stop/tail and number plate lamp	1	1F 9015
	Cable harness, right hand, stop/tail and number plate lamp	1	1F 9016
	Cable with eyelet and terminal, battery negative to solenoid switch	1	6K 314
	Cable with eyelets, starter to solenoid switch	1	6K 305
	Terminal insulating caps at solenoid switch	2	1F 9027
	Battery link cable, battery to battery	1	2K 7012
	Cable with terminals, battery positive to earth	1	2K 8308
	Cable with terminals, engine to earth	1	2K 8685
	Batteries	2	11K 9007
	Clips, spring steel, chassis harness to side member	9	2K 8910
	Rubber grommet, chassis harness through side member	1	2H 2816
	Rubber grommet, chassis harness through rear cross member	1	2H 2817
	Rubber grommet, battery cables through body floor	1	3H 1457
	Rubber grommet, starter cable through cross brace, right hand member	1	2H 890
	Clips, battery cable to cross brace members	3	2H 1667
	Resistance indicator for heater plug	1	11B 143
	Fuse, 60 amp., heater plug circuit	1	1F 9014
	CONVERSION PETROL TO DIESEL		
	Conversion set of parts (less power unit)	1	58G 345

PETROL TO DIESEL CONVERSION

16-H.P. Taxi and Hire-Car

This article has been prepared to cover the instructions and modifications necessary when converting an Austin FX.3 petrol engined Taxi or FL.1 Hire-Car to diesel power, using the new B.M.C. 2.2-litre diesel engine, part number 11B 211.

No major changes are necessary, all the parts required are contained in the conversion set and the conversion can be carried out by normal workshop practice. All references to right or left refer to the side of the vehicle when looking forward from the cab. All nuts, studs and setscrews on the diesel engine have U.N.F. threads.

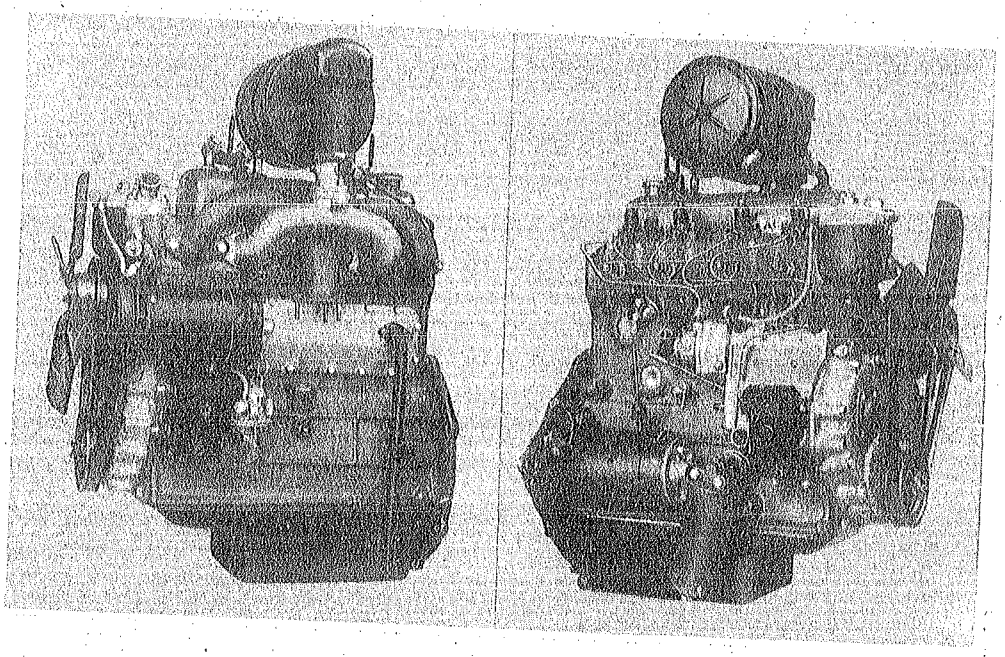

STR 1456

Fig. 1. Left and right hand views of the B.M.C. 2.2-litre diesel engine

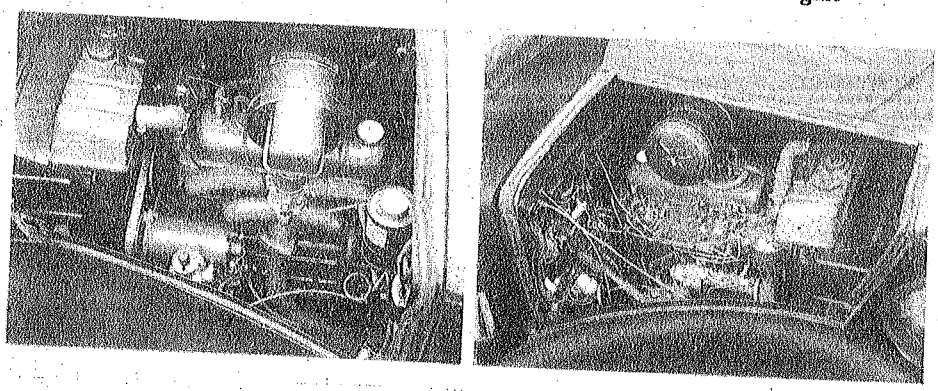

STR 1457

Fig. 2. Left and right hand views showing the engine installed in an Austin FX.3 Taxi

Continued

PETROL TO DIESEL CONVERSION—*continued*

PREPARATION OF THE VEHICLE FOR CONVERSION

1. Drain the radiator and fuel tank, remove the bonnet, radiator and radiator surround. Disconnect the battery.
2. Remove the petrol engine; this can be done without taking off the wings. The engine, after releasing all fixings and connexions can be lifted out forwards and upwards. Remove the exhaust downpipe, this may be discarded.

MODIFICATIONS TO THE VEHICLE

1. Unscrew the setscrew B (Fig. 3) from the side cover of the steering box, countersink the screw hole and fit the $\frac{5}{16}$" B.S.F. countersunk head screw which is supplied. This is to give extra clearance for the injection pump.
2. Detach the steering arm from the steering box, Remove the steering box bracket and replace it with the new one supplied. When fitting the steering box to the new bracket, push it into the bracket as far as it will go, leaving no gap at A, and then file a new notch in the steering box for the clamp bolt C—see Fig. 3.

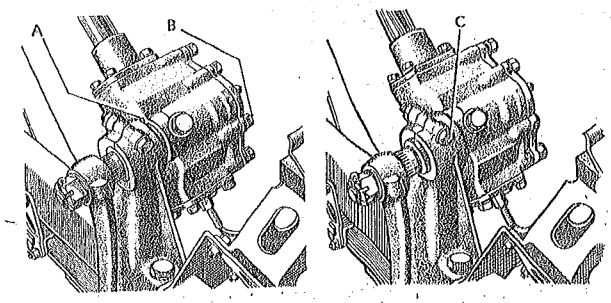

Fig. 3 *STR 1458*

The steering box has been moved over to the extreme right of the bracket and the screw B replaced with a countersunk one.

3. Fit the new steering arm (see Fig. 4 showing the difference between the old and new arms). On no account must the existing arm be used as this would foul the road wheel at full lock.

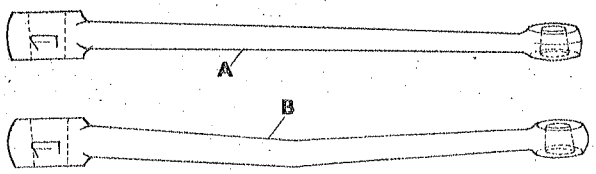

Fig. 4 *STR 1459*

A = Old steering arm. B = New steering arm.

4. Remove the bracket from the hydraulic jacking system pump unit, and replace it with the new bracket supplied. The pump will have to be turned around and the fluid pipes reset accordingly.
5. Planish back the bulkhead panel to extend the clearance recess at the point where the back of the engine comes close to the accelerator cross shaft. Heat the cross shaft and bend it, as shown by dotted line, Fig. 5, to ensure adequate clearance with the rear of the diesel engine which extends slightly further back than the petrol one.

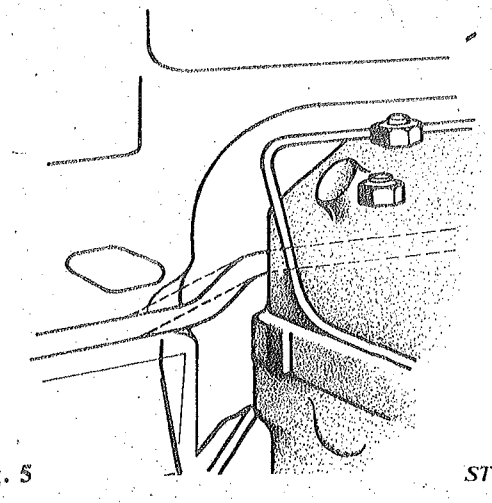

Fig. 5 *STR 1460*

The bulkhead should be planished back and the cross shaft bent as shown to ensure adequate engine clearance.

Continued

PETROL TO DIESEL CONVERSION—*continued*

PREPARATION OF ENGINE FOR FITTING

1. Fit the new clutch to the engine, making sure that the correct clutch centre driven plate is used. Taxis up to chassis number 151282 and Hire-Cars up to chassis number 153579, both numbers inclusive, were fitted with a gearbox first motion shaft having $1\frac{1}{8}$" (28.574 mm.) overall spline diameter; for these clutch plate part number 7H 3235 must be used. After this change,* a $1\frac{1}{4}$" (31.749 mm.) diameter spline was used, and for these, clutch plate part number 7H 3234 is required. The new diesel engine clutch is 10" (25.4 cm.) diameter and the old 9" (22.86 cm.) one cannot be used. Centralizing tool GT 79 is available for use with clutch plate 7H 3235, and GT 81 is available for clutch plate 7H 3234.

2. Replace the three starter flange studs in the gearbox with the longer ones supplied.

3. Lift the engine by means of the cylinder head sling brackets, and manouvre it into the vehicle, the lifting and manouvring of the diesel engine being the same as that for the petrol engine. Secure the engine into place using the new bolts, studs and mounting brackets supplied. The old bolts and studs cannot be used owing to the thicker rear mounting plate which is used with the diesel engine.

4. The accelerator controls may now be connected up. The steel and rubber accelerator shaft bearing should be lined up with the end of the venturi valve spindle and bolted to the bulkhead. Bend the accelerator shaft lever downwards, taking care to see that the bend takes place at the point shown to prevent interference with the spring tension, see Fig. 6. Shorten the lever by 3" (7.6 cm.) and flatten the end; drill a hole $\frac{3}{16}$" (4.762 mm.) in diameter in the flattened end to receive the ball pin.

   The accelerator throttle spindle with lever can now be fitted and connected to the venturi spindle with the spring steel coupling. Fit the new throttle rod supplied, and adjust the ball joint ends and the spring steel coupling to ensure that the throttle closes fully against the venturi stop when the accelerator pedal is released. The venturi maximum stop is set on test at the works and is sealed. It should not be touched. The venturi slow running stop is also set on test but not sealed, and may be re-adjusted if necessary after the engine has been run in. When converting a Hire-Car it will be necessary to fit a throttle hand control assembly, part number 1F 1237, which is standard equipment on all Taxis. This is because of a variation in the tick-over speed of the diesel engine between hot and cold running.

* Refer to Austin Service Journal, Cars, Volume 24, section "Gearbox", page 26 for full details.

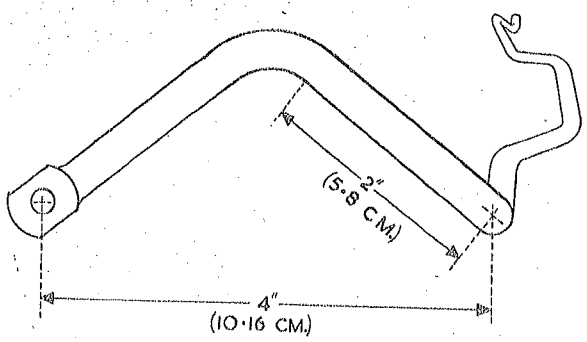

Fig. 6 *STR 1461*

The accelerator lever must be bent, cut and drilled to the dimensions given.

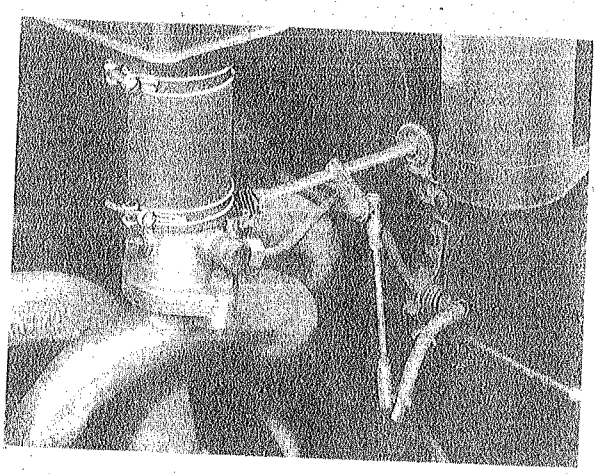

Fig. 7 *STR 1462*

The venturi and throttle linkage. Engine movement is fully compensated by the metal and rubber bearing which is bolted to the bulkhead.

Continued

PETROL TO DIESEL CONVERSION—*continued*

ELECTRICAL CIRCUIT MODIFICATIONS

1. Remove the ignition coil, cut off the ignition coil leads B and the engine leads C. Disconnect the two leads from the F and D terminals on the control box G and cut them off.

2. Make up two new dynamo leads 7 ft. (213 cm.) long using 28/.012″ cable for the dynamo output lead D and 14/.012″ cable for the dynamo field. Encase the cables in Polyvinylchloride (P.V.C.) sleeving and clip them neatly along the bulkhead and the left-hand flitchplate. The dynamo output cable is then connected to the D terminal on the control box and the field cable to the F terminal.

3. Remove the starter push switch from the instrument panel, and make a taped join of the two cables which were connected to it. Disconnect the starter solenoid cable H from the small terminal on the starter solenoid switch J and make a taped join to lengthen it by 12″ (30.5 cm.) using 14/.012″ cable. Connect this extended cable K to the starter relay switch L on the starter. Connect another 14/.012″ cable M between the starter relay switch and the small terminal on the starter solenoid switch.

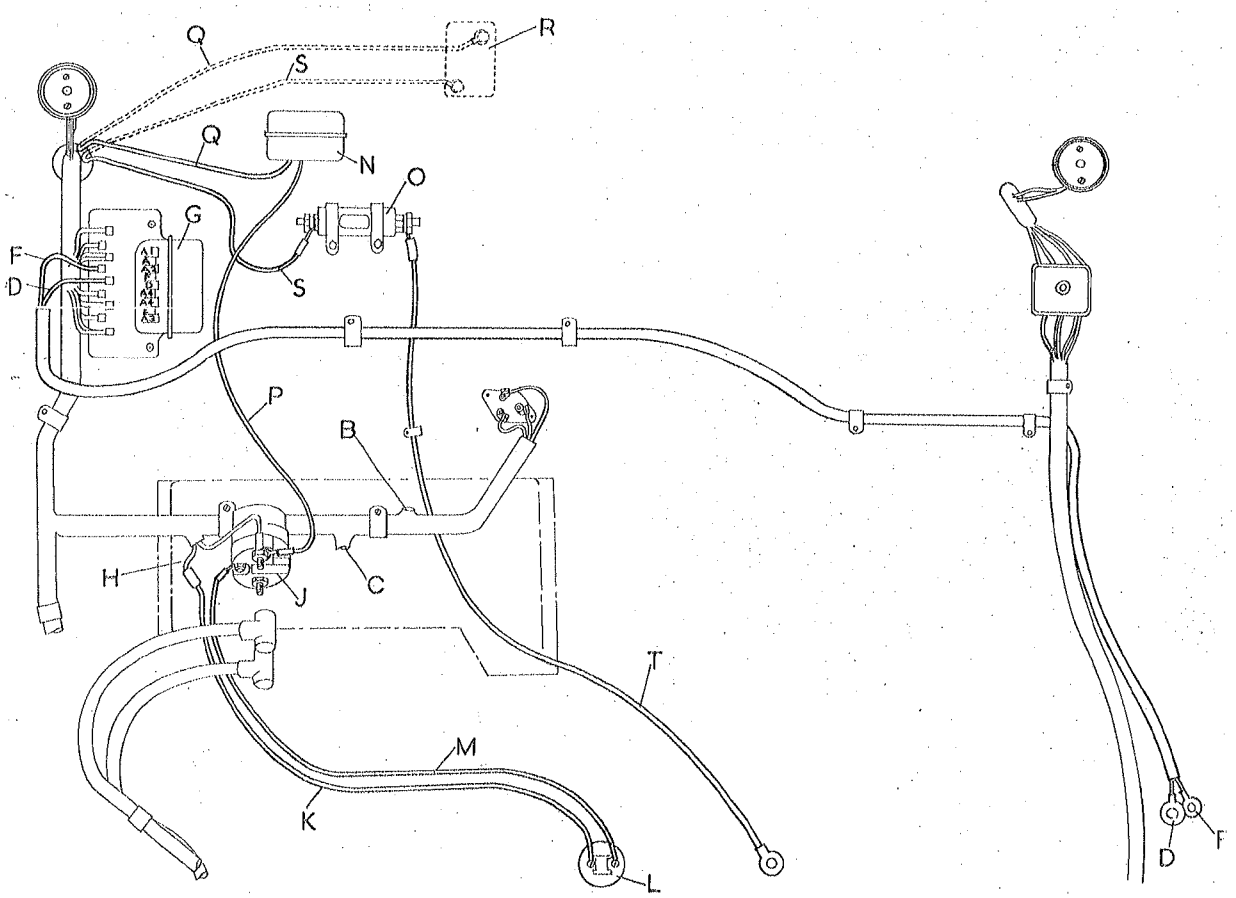

STR 1463

Fig. 8. Electrical wiring layout showing the new installation in heavy line. Encase the new cables in P.V.C. tube for extra protection

B. Disused ignition cables.
C. Disused engine cables.
G. Control box.
H. Old cable to starter solenoid switch.
J. Starter solenoid switch.
K. Cable to starter relay switch.
L. Starter relay switch, on starter.
M. Cable, relay switch to solenoid switch.
N. Fuse, 60 ampere.
O. Resistor indicator.
P. Cable, battery terminal to fuse.
Q. Cable, fuse to push switch.
R. Heater push switch on instrument panel.
S. Cable, push switch to resistor indicator.
T. Cable, resistor indicator to number 4 heater plug.

Published October 11, 1954

PETROL TO DIESEL CONVERSION—*continued*

ELECTRICAL CIRCUIT MODIFICATIONS—*continued*

4. Bolt the fuse N and the resistor-indicator O to the bulkhead in the positions shown—see Fig. 8. Solder an eyelet to a 28/.012″ cable P and connect it from the battery cable terminal on the solenoid switch to the fuse. Take a 28/.012″ cable Q, from the fuse to the heater push switch R, which must be mounted on the instrument panel in place of the starter push switch. From the other terminal of the heater push switch a 28/.012″ cable S is connected to the resistor indicator O, and from the other terminal of the resistor indicator a 28/.012″ cable T with eyelet end is connected to the terminal of number 4 heater plug. The heaters are wired together in series by copper wire links and the circuit is completed by a short braided earth cable with eyelet ends which is connected between number one heater plug and earth.

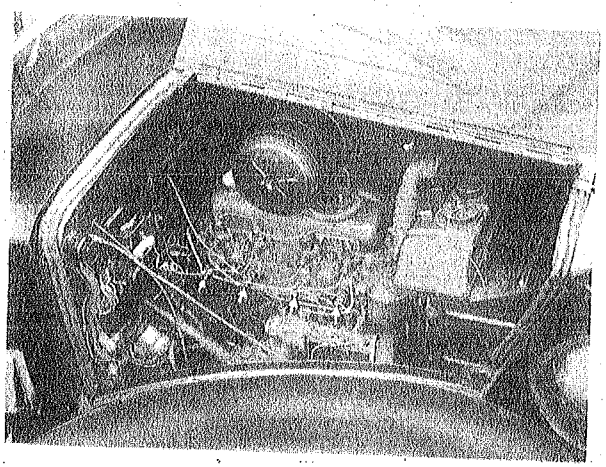

Fig. 9 *STR 1464*

The heater plugs, arrowed, are connected in series to earth and promote easy starting on the coldest days. The heaters must not be used when the engine is running.

ENGINE CONTROLS

1. Screw the starter lever bracket underneath the scuttle on the right hand side, bolt the starter lever to it, and connect the starter pull cable between the starter lever and the starter. The starter pull cable has a screwed end with a locknut for adjustment. The assembly of the starter cable is shown in Fig. 10.

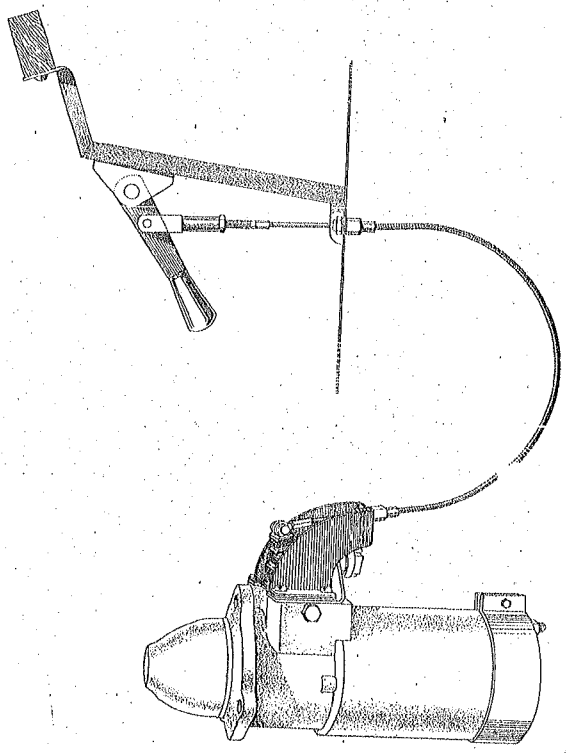

Fig. 10 *STR 1465*

When the starter lever is pulled the starter pinion is fully pre-engaged with the ring gear before the motor is started, thus ensuring quiet operation and long life of the components. When the Master switch (previously Ignition) is "off" the starter cannot be operated because the starter relay switch is fed by the Master switch.

Continued

PETROL TO DIESEL CONVERSION—*continued*

ENGINE CONTROLS—*continued*

2. Remove the choke control cable and replace it with the engine stop control cable.

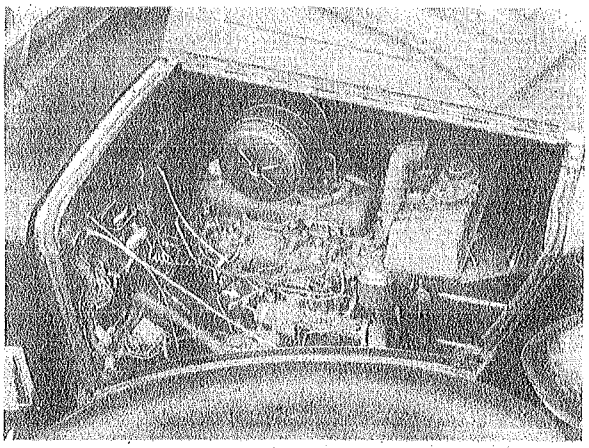

Fig. 11 *STR 1466*

The stop control cable must be adjusted so that the stop lever, arrowed, is quite free when the stop control knob is pushed home.

3. Check that the clutch pedal lever is not fouling against the starter. It may be necessary to bend the lever slightly to increase the clearance.

4. Remove the extension rod from the fuel supply tap. This is advisable because should the tap be turned off without the driver's knowledge, the engine could be started, but it would exhaust the fuel left in the filter, and then stop. Restarting involves several minutes' work to prime the system.

RADIATOR

A modified radiator is necessary, and a reconditioned exchange one, incorporating the modifications, is available by quoting part number 1F 2780R. It is an obvious advantage to have a radiator which is fully reconditioned and equal to a new one.

For the overseas market, or in instances where it is preferred to carry out the modifications locally, the requisite new parts for doing so can be supplied. The modifications consist of changing the position of the top tank water inlet pipe, and fitting a new bottom water tank. Opportunity should be taken to thoroughly flush the water tubes whilst the radiator is dismantled. The following illustrations will serve as a guide to enable a good tinsmith to do the job quickly and neatly.

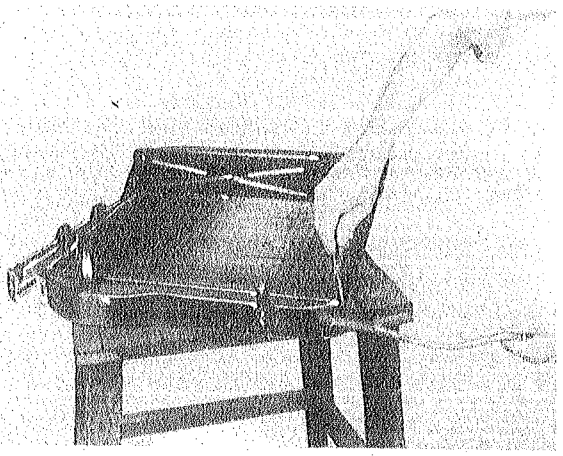

Fig. 12 *STR 1467*

The bottom of the side plate is heated with a gas flame to melt the solder which joins it to the bottom tank. One side plate has already been released.

Continued

PETROL TO DIESEL CONVERSION—*continued*

RADIATOR—*continued*

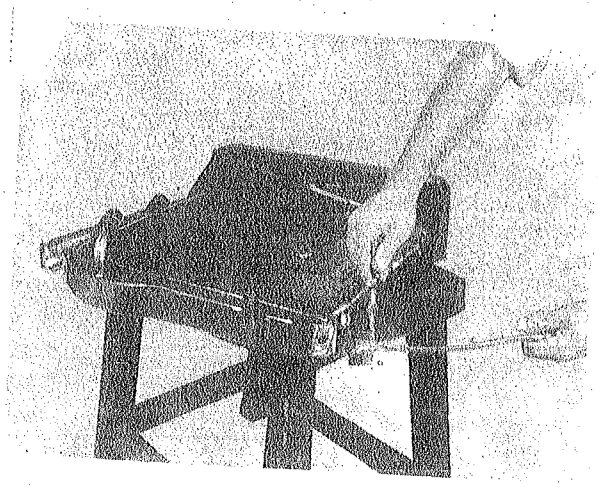

Fig. 13 *STR 1468*

The solder has melted and the side plate pulled away from the bottom tank.

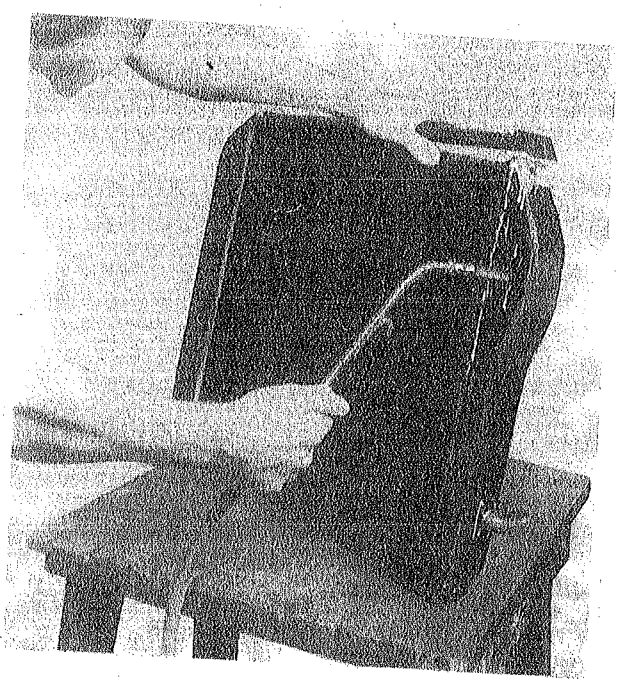

Fig. 14 *STR 1469*

The flame is played progressively along the joint of the tube plate and the bottom tank, the solder is seen running away from between the bottom tank and the bottom tube plate.

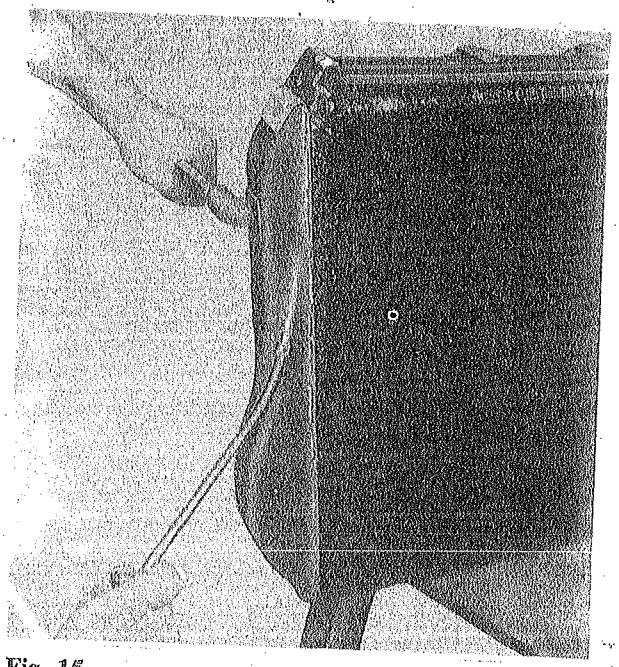

Fig. 15 *STR 1470*

After the solder has been melted out of the joint, the bottom tank is gently heated until it can be pulled away from the bottom tube plate with a lever inserted in the drain plug boss.

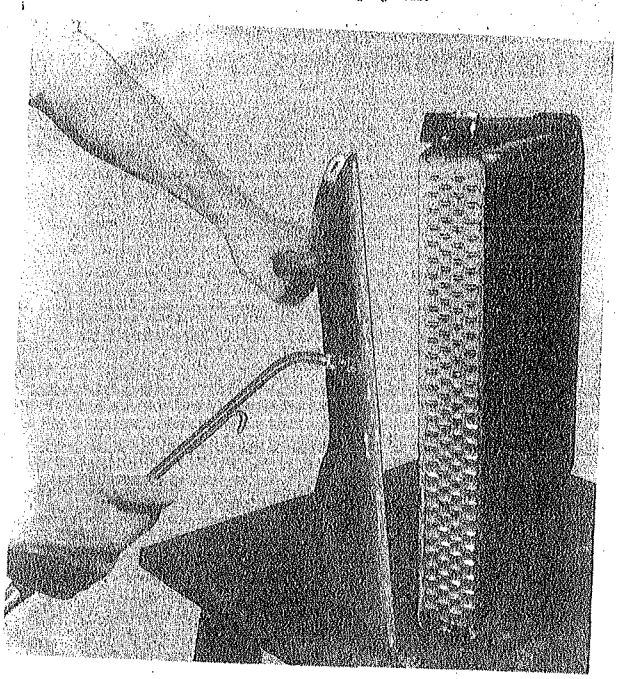

Fig. 16 *STR 1471*

The bottom tank has been removed from the radiator, and may be discarded.

PETROL TO DIESEL CONVERSION—*continued*

RADIATOR—*continued*

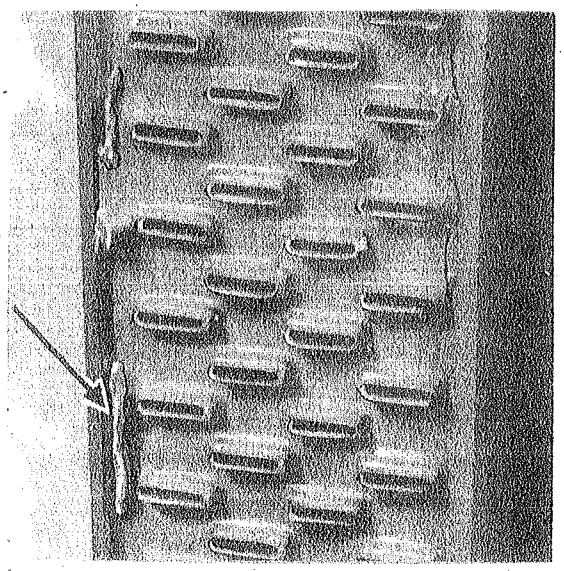

Fig. 17 *STR 1472*

The blobs of surplus solder, see arrow, must be removed before the new bottom tank can be fitted.

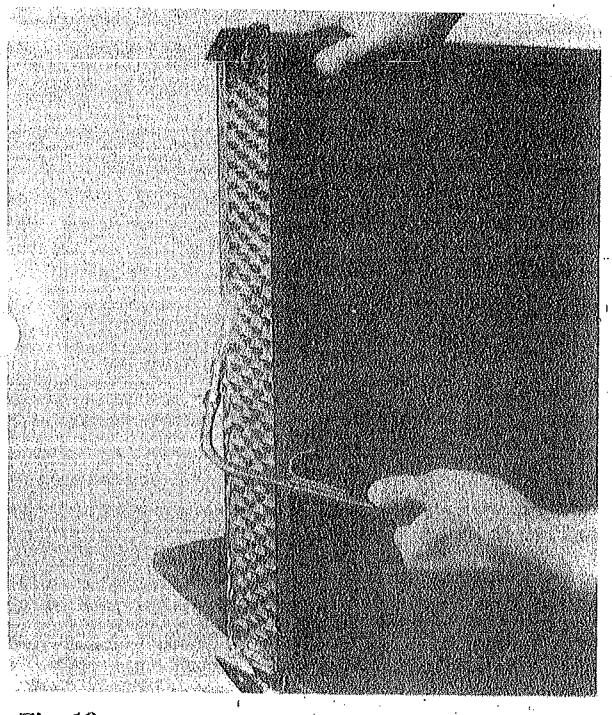

Fig. 18 *STR 1473*

The surplus solder is being removed by heating gently until it runs downhill. The flange of the tube plate above the flame is clean and bright. Soldering spirits should be applied beforehand to assist in getting a clean finish. Keep the flame away from the water tube ends to avoid disturbing the solder around them.

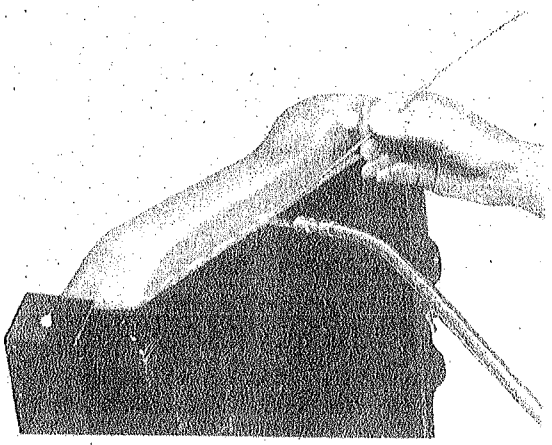

Fig. 19 *STR 1474*

The edges of the new bottom tank are painted with soldering spirits before soldering to the tube plate. Ordinary soft solder (40% tin, 60% lead) should be used, and allowed to run well into the joint.

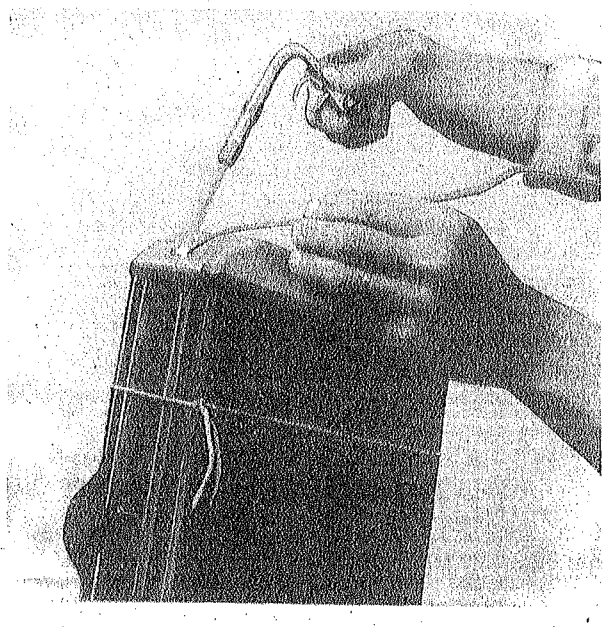

Fig. 20 *STR 1475*

The side plates are tied back into position and then soft soldered to the bottom tank. The radiator is supported to bring the work horizontal and the solder is run in through the sweating hole.

Continued

PETROL TO DIESEL CONVERSION—*continued*

RADIATOR—*continued*

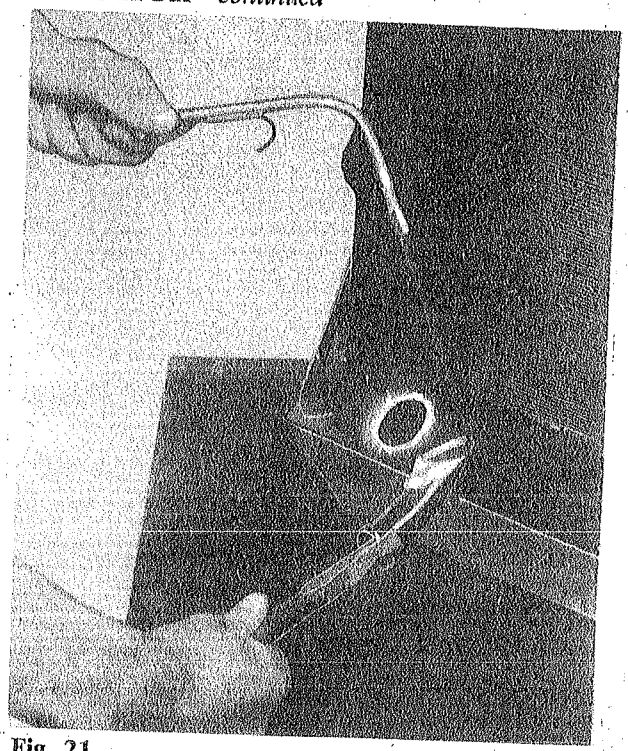

Fig. 21 *STR 1476*

The water pipe on the top tank is heated until the solder softens, and pulled away with pliers; it may be discarded.

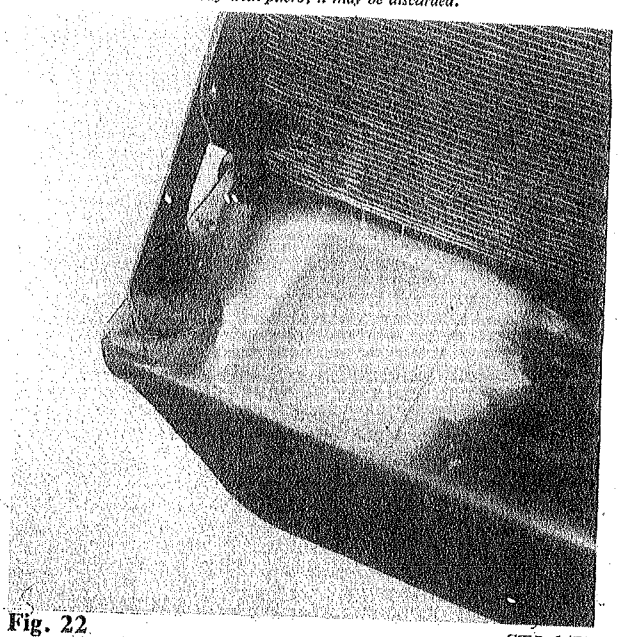

Fig. 22 *STR 1477*

The hole left by the discarded water pipe has had a patch cut from thin brass or copper sheet soldered over it.

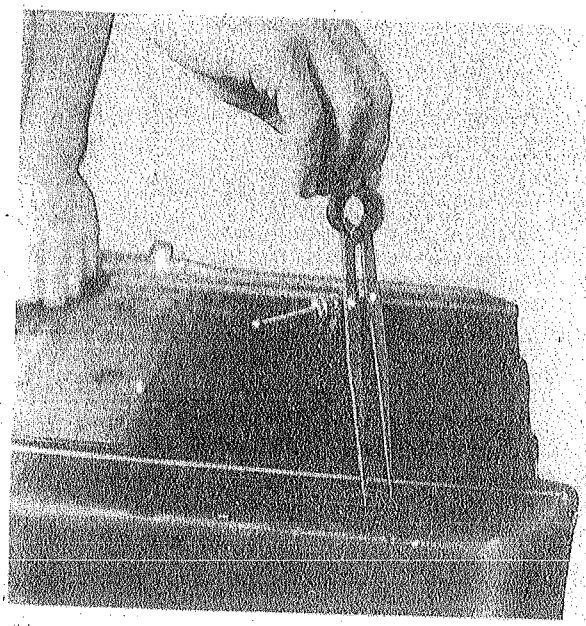

Fig. 23 *STR 1478*

The top tank is marked off ready for cutting. Two circles are described, the outer one 1⅜" (34.9 mm.) diameter and the inner one ⅞" (22.22 mm.) diameter. Both are centred 4⅞" (123.8 mm.) to the left of the radiator centre line and 1½" (38.1 mm.) above the base of the top tank.

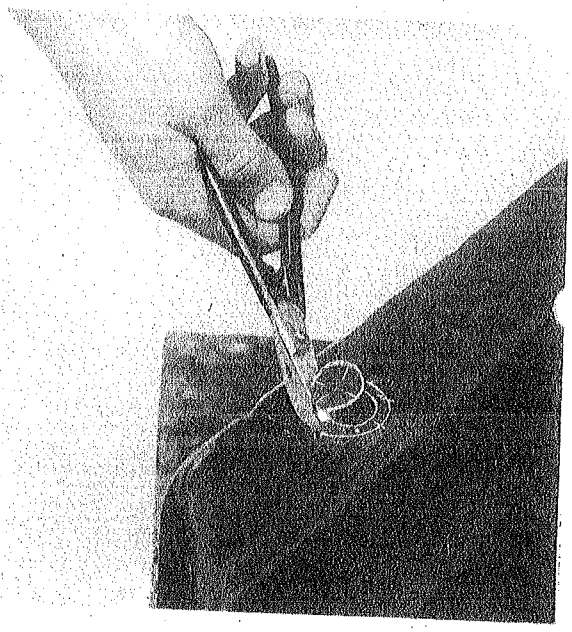

Fig. 24 *STR 1479*

The metal has been pierced with a sharp chisel, and the inner circle cut neatly out with small tinsnips.

Continued

PETROL TO DIESEL CONVERSION—*continued*

RADIATOR—*continued*

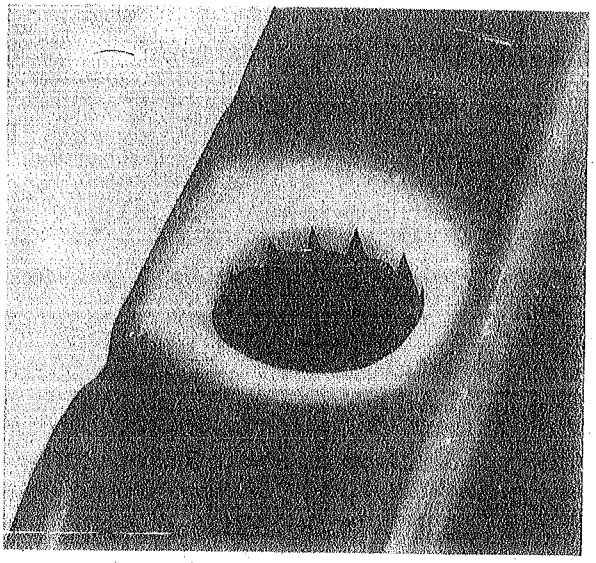

Fig. 25 *STR 1480*

The margin between the inner and outer circles has been cut into segments and hammered inwards until the new water pipe is a tight fit in the hole. The edges are cleaned and tinned.

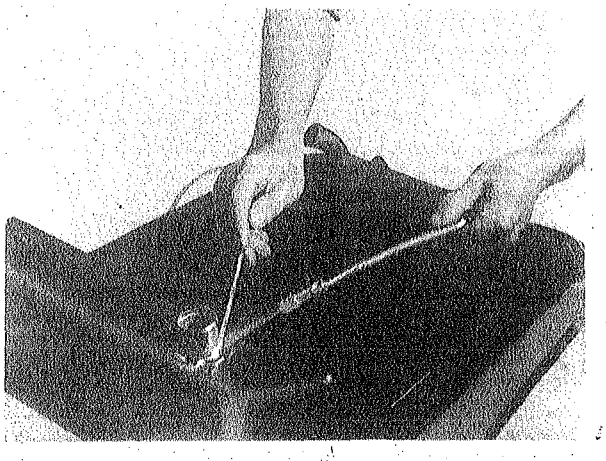

Fig. 26 *STR 1481*

The water pipe is soldered in place with soft solder using a small flame.

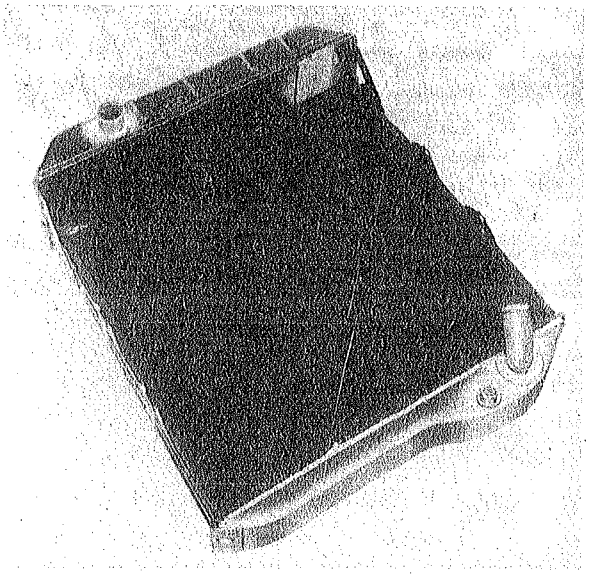

Fig. 27 *STR 1482*

The finished radiator has been tested for leaks by corking up the outlets and applying 10 lb./sq. in. (0.70307 Kg/cm²) air pressure while immersed in water.

FITTING THE RADIATOR TO THE VEHICLE

The new radiator is fitted in the same manner as the old one, but the radiator must be moved forward $\frac{3}{8}$" (9.52 mm.) by using the packing pieces and longer bolts supplied. The side panels will have to be cut back by the same amount (Fig. 29).

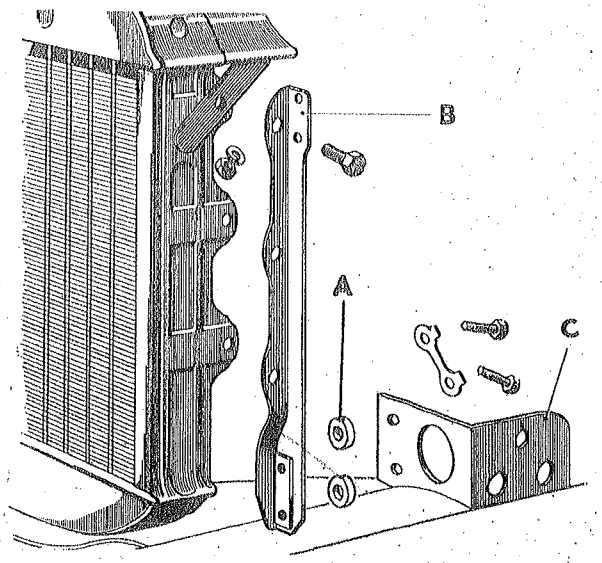

Fig. 28 *STR 1483*

The packing pieces A are bolted between the bracket B and the frame bracket C to ensure correct clearance with the fan. For convenience they may be tack-welded to the bracket B.

Continued

PETROL TO DIESEL CONVERSION—*continued*

FITTING THE RADIATOR TO THE VEHICLE—*continued*

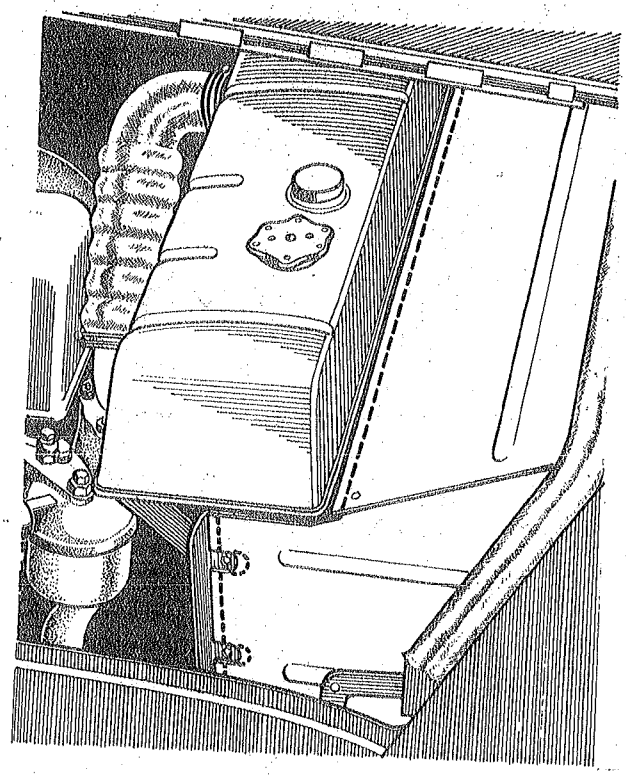

Fig. 29 *STR 1484*

The side panels are cut away ⅜" (9.52 mm.) as indicated by the dotted line to enable the radiator to be moved forward.

The stay, part number 1F 2804, is fitted between the radiator bottom hose and the engine mounting, to increase the clearance between the hose and the timing case.

Complete the installation by connecting up fuel, water and oil gauge pipes, and fitting the new exhaust pipe. The exhaust tail pipe should be turned downwards so that in the event of smoke being emitted it will not be directed on to passers-by.

PREPARATION OF ENGINE FOR RUNNING

1. Fill the radiator.
2. Fill the engine sump to the full mark on the dip stick with approved oil, see chart. It is important always to use the High Detergent oils recommended.
3. Make sure that the air cleaner is fitted properly. The action of the governor will be affected if the engine is run without the air cleaner, resulting in the engine racing.
4. Fill the fuel tank with diesel oil. It is advisable to paint the filler cap in yellow and to paint DIESEL ONLY on it.
5. Remove the side cover from the fuel injection pump, and add engine oil until it starts to drip from the oil drain pipe C (Fig. 30). No further lubrication is necessary as the pump will be lubricated in use by the diesel oil.
6. Open the bleed tap on the injection pump—see A (Fig. 30), and get an assistant to operate the priming lever on the fuel lift pump until no air bubbles come out with the fuel from the bleed pipe. It will be necessary to pump about two pints of fuel through to ensure freedom from air.

STARTING THE DIESEL ENGINE

When warm the engine should start readily by use of the starter alone, and without the use of the heaters or the excess fuel device. When the engine is cold the excess fuel button B (Fig. 30) should be pressed into engagement, the accelerator pressed right down, and the starter lever pulled fully home. Continue to hold the starter in engagement until the engine speeds up, because if the starter lever is released as soon as the engine fires it will stop again. The excess fuel button will automatically disengage as the engine speeds up. The heater plugs will normally need to be used when the engine is near or below freezing (0° C., 32° F.) temperature. The technique for zero temperature starts is the same as for a normal cold start, but in addition press the heater button for approximately 30 seconds immediately before pulling the starter lever. Release the heater button, and pull the starter lever straight away before the heater plugs have time to cool off, when the engine will start readily.

DO NOT press the heater button when the engine is running or when the starter is being pulled, because the heater elements will fail under the combined heat from the electric current and the combustion of oil fuel.

Continued

PETROL TO DIESEL CONVERSION—*continued*

STARTING THE DIESEL ENGINE—*continued*

As soon as the engine commences to run, check oil pressure and allow to warm up before putting under load, during this time check all water, oil and fuel connections and examine for leaks. If the engine stops after a short run, the probable cause is air in the fuel line, and the bleeding operation should be repeated.

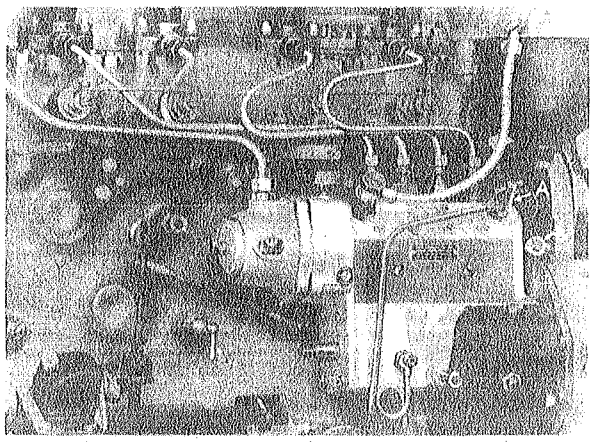

Fig. 30 *STR 1485*

The button A is an excess fuel device and provides easy starting in cold weather. It releases automatically when the engine is running. B is the fuel bleed tap and C is the oil drain pipe.

The engine should be run in carefully in the usual manner, not exceeding 30 m.p.h. (48 k.p.h.) in top gear and correspondingly lower speeds in the lower gears, for the first 500 miles. To stop the engine simply pull the stop control knob. The driver's handbook should be carefully studied before using the engine.

If the engine shakes and rocks excessively whilst ticking over when cold, do not adjust the venturi minimum stop, Fig. 31, which has been set at the factory to give correct hot running tick over. Simply adjust the hand throttle adjuster which can be readily re-adjusted without leaving the driving seat as the engine warms up.

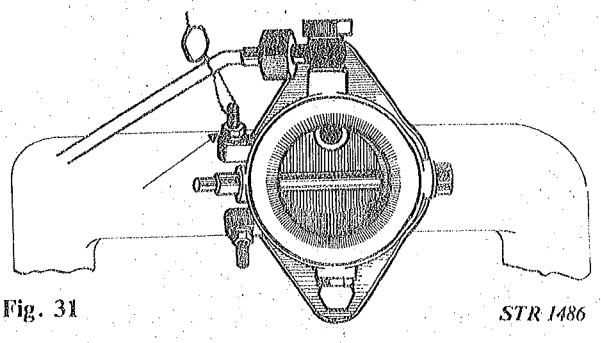

Fig. 31 *STR 1486*

The venturi stops are set at the factory when the engine is bench tested. The maximum stop (arrowed) is sealed and must not be altered. The minimum stop may require slight adjustment when the engine has fully run in.

Marketing Company	Climatic Conditions	
	Above 90° F.	Below 90° F.
Esso	"Essolube" H.D. 30	"Essolube" H.D. 20
Vacuum	"Delvac" D.E. 30	"Delvac" D.E. 20
Shell	"Shell" Rotella 30	"Shell" Rotella 20
B.P.	"Energol Diesel" "D" S.A.E. 30	"Energol Diesel" "D" S.A.E. 20
Duckham's . . .	"Duckham's N.O.L." HD30/MIL	"Duckham's N.O.L." HD20/MIL
Wakefield's . . .	"Castrol" C.R. 30	"Castrol" C.R. 20

Continued

PLATE A

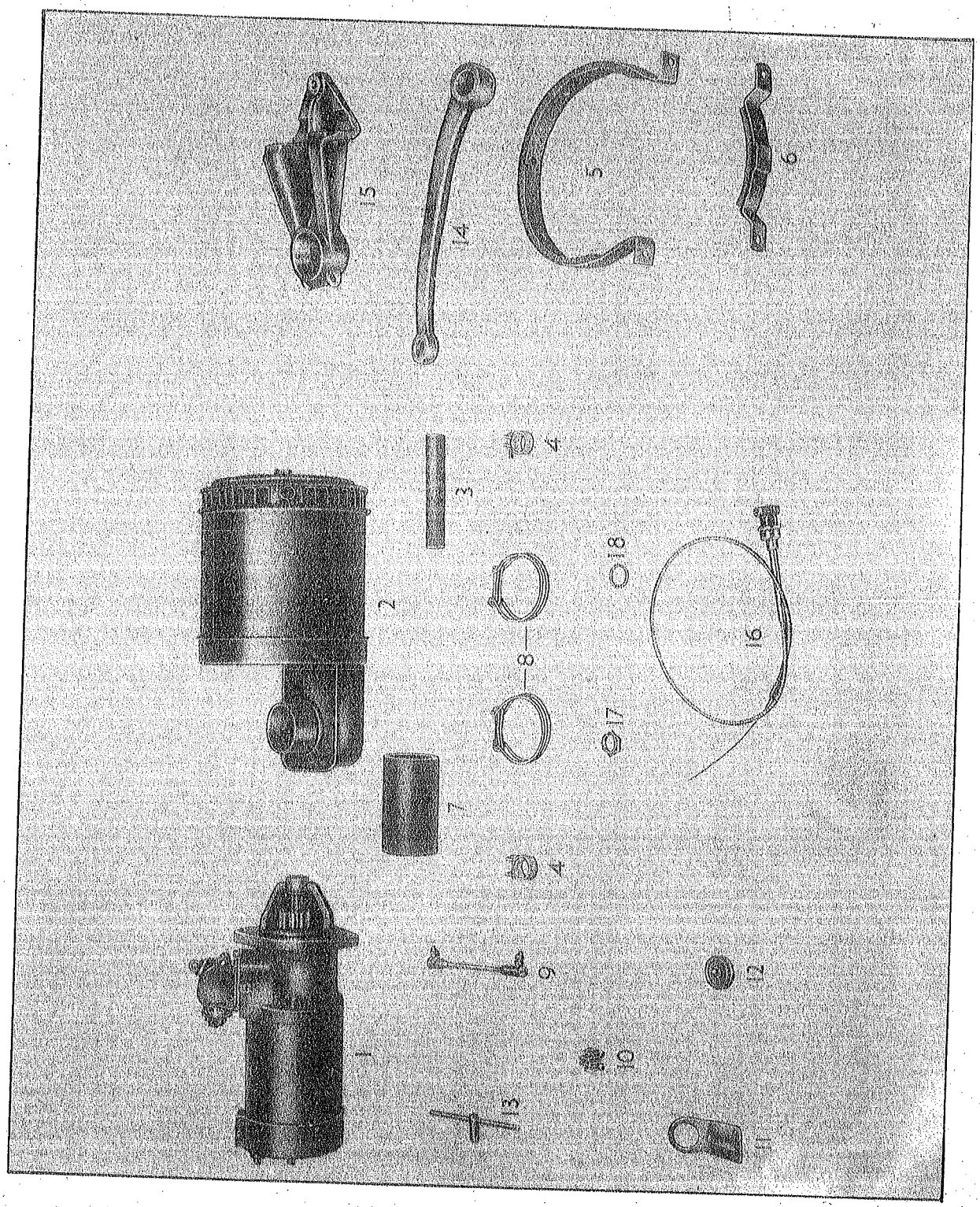

Continued

CONVERSION SET OF PARTS

(Obtainable by quoting part number 58G 345)

Plate	Description	Number per Vehicle	Part Number
A1	Starter, with relay switch	1	11B 152
	Studs in gearbox for starter flange	3	11B 247
	Nuts for studs	3	FNZ 506
	Spring washers	3	LWZ 206
A2	Air cleaner and intake silencer	1	3H 1144
A3	Rubber connection, air cleaner to valve rocker cover	1	11B 270
A4	Clips	2	2H 3920
A5	Strap, with rubber pad, for air cleaner	1	11B 267
	Nuts for bolts in valve rocker cover	2	FNZ 105
	Spring washers	2	LNZ 205
A6	Cradle, with rubber pad, for air cleaner	1	11B 269
A7	Rubber connection for air cleaner to venturi unit	1	11B 271
A8	Clips for rubber connection	2	2H 3738
A9	Throttle rod with ball joints	1	1F 2812
	Nuts for ball pins	2	FNZ 103
A10	Throttle coupling	1	3H 1841
A11	Bracket for throttle shaft bearing	1	1F 2811
A12	Rubber and brass bearing for shaft	1	1G 2175
A13	Throttle shaft with lever	1	1F 2808
A14	Steering arm	1	1F 6200
A15	Steering box bracket	1	1F 6203
	Bolt, bracket to frame	1	6K 59
A16	Engine stop control cable	1	1F 8328
A17	Nut, stop control to instrument panel	1	2K 8782
A18	Fibre washer	1	2K 7502
	Grommet in instrument panel	1	3F 90
B1	Starter lever	1	1K 2924
B2	Knob for lever	1	2F 5013
B3	Joint pin, lever to hinge bracket	1	2K 5185
	Split pin	1	CPS 0306
B4	Hinge bracket	1	1K 2928
	Bolts to starter control bracket	2	HNS 0405
	Nuts for bolts	2	FNZ 104
	Spring washers	2	LWZ 104
B5	Starter control bracket	1	1F 2795
B6	Starter control cable	1	1F 2797
B7	Fork	1	1F 2800
	Locknut	1	FNZ 204
B8	Joint pin, fork to starter lever	1	2K 5556
	Split pin	1	CPS 0205
B8	Joint pin, cable to starter motor	1	2K 5556

Continued

PLATE B

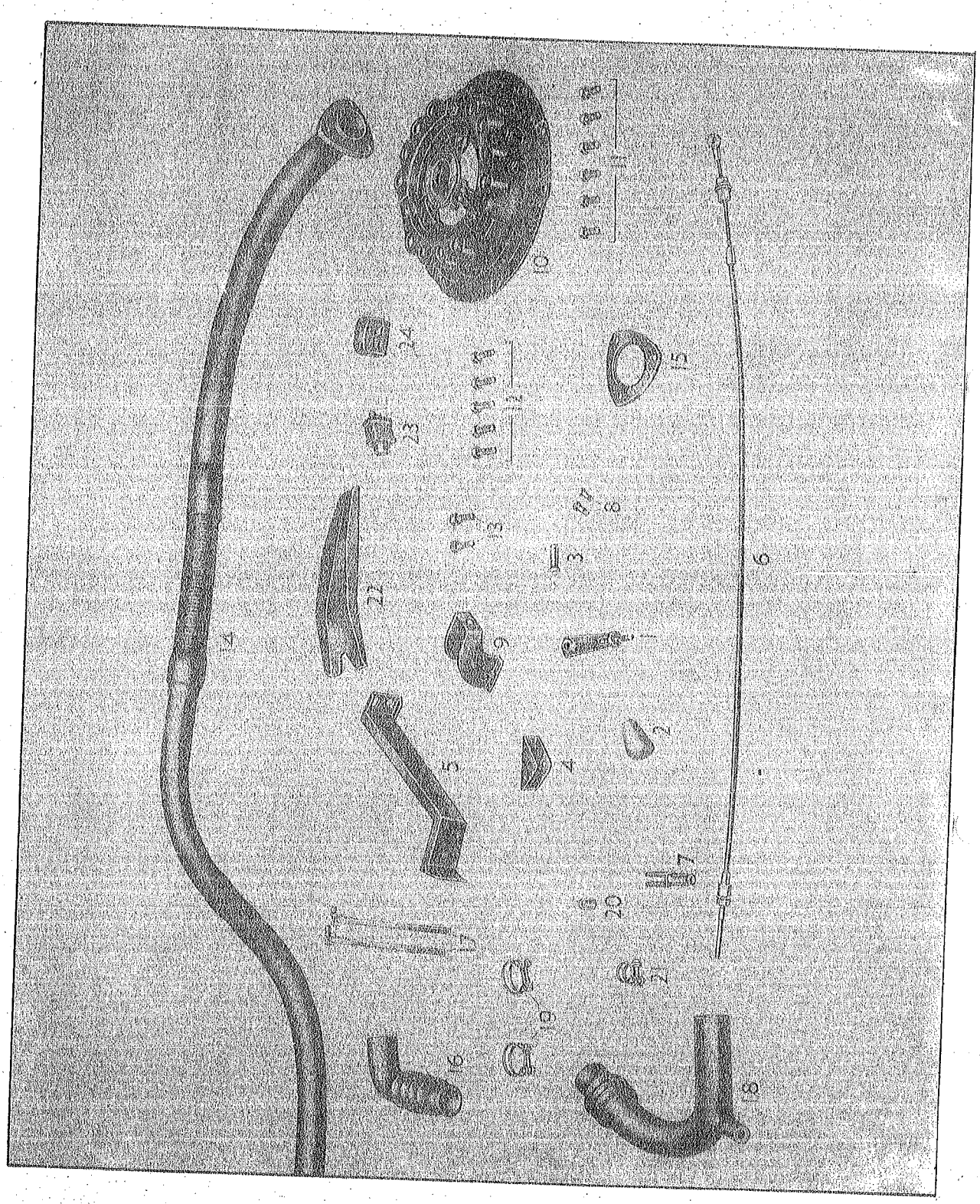

STR 1488

CONVERSION SET OF PARTS—*continued*

Plate	Description	Number per Vehicle	Part Number
	Plain washer	1	PWZ 104
	Spring washer	1	2K 2543
	Split pin	1	CPS 0205
B9	Bracket, for operating cable, on starter	1	11B 274
B10	Clutch cover assembly	1	7H 3232
B11	Screws to flywheel	6	HNS 0607
	Spring washers	6	LWN 106
B12	Setscrews, gearbox to mounting plate	5	2K 3141
B13	Dowel bolts, gearbox to mounting plate	2	11B 248
	Nuts for bolts	2	FNZ 106
	Spring washers	7	LWZ 206
	Setscrew, $\frac{5}{16}$" B.S.F. countersunk for steering box side cover	1	7H 6493
B14	Exhaust pipe	1	1F 2801
B15	Joint washer for flange	1	1B 1403
	Nuts for studs in manifold	1	51K 1532
B16	Radiator top hose, rubber	1	1D 1345
B17	Clips for connection	2	ALT–14
B18	Radiator bottom hose, rubber	1	1F 2781
B19	Clips for connection	2	8G 632
B20	Plug for bottom hose heater connection	1	1F 2782
B21	Clip for plug	1	ALT–21
	Stay for radiator bottom hose	1	1F 2804
	Clip for stay	1	1F 2805
	Bolt, stay to clip	1	HZS 0404
	Nut for bolt	1	FNZ 104
	Distance pieces for radiator brackets	4	1F 2785
B22	Bracket for hydraulic jack pump	1	1F 8334
	Heater resistor indicator	1	11B 143
B23	Heater panel switch	1	3H 1193
	Screws, heater switch to panel	2	6K 9506
B24	Fuse box	1	1F 9014
	Screws, fuse box to bulkhead	2	2K 4150
	Nuts for screw	2	2K 4013
	Spring washers	2	LWN 102
	Clips for cables	6	3H 2762
	Screws	12	2K 3867
	Nuts	12	2K 4012
	Spring washers	12	LWN 203
	Cable eyelets	10	17H 5287
	Cable eyelets	10	17H 5288
	Driver's Handbook	1	Pub. 1162
	Cable sleeving, 5 mm.	1	3H 2632
	Cable sleeving, 7 mm.	1	2H 4998

Continued

CONVERSION SET OF PARTS—*continued*

Plate	Description	Number per Vehicle	Part Number
	Parts to be ordered separately as required		
	Radiator with filler cap	1	*1F 2780R
C1	Radiator bottom tank assembly	1	*7H 1802
C2	Radiator top tank inlet pipe	1	*7H 1811
C3	Clutch plate with linings, $1\frac{1}{8}$″ splines	1	†7H 3235
C4	Clutch plate with linings, $1\frac{1}{4}$″ splines	1	†7H 3234
C5	Hand throttle adjuster assembly	1	†1F 1237

* See Engine, page 58. † See Engine, page 55.

PLATE C

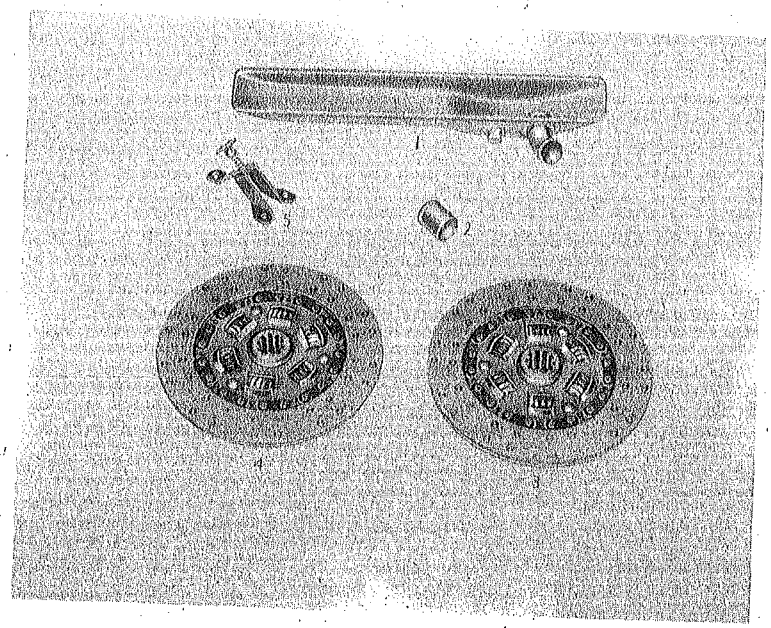

STR 1489

VALVE GUIDE SHROUD

A 30

The shrouds for the valve guides have been slightly shortened from $\frac{11}{16}$" (17.462 mm.) to $\frac{19}{32}$" (15.081 mm.) to obviate the possibility of oil seeping down the valve guides.

INTERCHANGEABILITY

The shortened valve guide shrouds should always be fitted when replacements are required

SUMMARY OF ALTERATION

Type	Range	Plate	Description	Number per Vehicle	Austin Part Number	Parts List Publication Number
A30	E.30635–75587	B85	Valve Guide Shrouds with oil seal retainer	8	2A 346	Pub. 883B/2, p. 1
	E.75588 on		Valve Guide Shrouds with oil seal retainer	8	2A 544	

FOR YOUR RECORDS	PARTS LISTS
	STOCK CARDS
	PARTS ORDERED
	ALTERATIONS NOTED

Published October 11, 1954

PISTON RINGS

A 30

The third compression ring (parallel) on A 30 pistons has now been replaced by a tapered one, leaving only a parallel ring in the top groove. This modification has been introduced to improve the oil consumption. It should be noted that tapered rings should always be fitted with the face marked "top" facing uppermost.

INTERCHANGEABILITY

Pistons fitted with the modified ring arrangement will be supplied for replacements.

SUMMARY OF ALTERATION

Type	Range	Plate	Description		Number per Vehicle	Austin Part Number	Parts List Publication Number
A30	To E.75587	B68	Pistons with rings and gudgeon pin, standard (use 2A 558)	Alternatives	4	2A 207	Pub. 883B, "Engine", p. 5
	To E.9537		Pistons with rings and gudgeon pin (use 2A 360)		4	2A 58	
	E.9538–75587		Piston with rings and gudgeon pin (use 2A 557)		4	2A 360	
	To E.75587		Piston with rings and gudgeon pin (use 2A 559)		4	2A 469	
	E.75588 on		Pistons with rings and gudgeon pin, standard	Alternatives	4	2A 558	
			Pistons with rings and gudgeon pin, standard		4	2A 557	
			Pistons with rings and gudgeon pin, standard		4	2A 559	

Continued

FOR YOUR RECORDS	PARTS LISTS
	STOCK CARDS
	PARTS ORDERED
	ALTERATIONS NOTED

PISTON RINGS—*continued*

SUMMARY OF ALTERATION—*continued*

Type	Range	Plate	Description	Number per Vehicle	Austin Part Number	Parts List Publication Number
A 30	To E.75587	B 64	Compression Rings, parallel (top and 3rd rings), standard	8	2A 99	Pub. 883B, "Engine", p. 5
			Compression Rings, parallel (top and 3rd rings), .010″ o/s	8	2A 99F	
			Compression Rings, parallel (top and 3rd rings), .020″ o/s	8	2A 99A	
			Compression Rings, parallel (top and 3rd rings), .030″ o/s	8	2A 99B	
			Compression Rings, parallel (top and 3rd rings), .040″ o/s	8	2A 99D	
		B 65	Compression Rings, taper (2nd ring), standard	4	2A 100	
			Compression Rings, taper (2nd ring), .010″ o/s	4	2A 100F	
			Compression Rings, taper (2nd ring), .020″ o/s	4	2A 100A	
			Compression Rings, taper (2nd ring), .030″ o/s	4	2A 100B	
			Compression Rings, taper (2nd ring), .040″ o/s	4	2A 100D	
	E.75588 on		Compression Rings, parallel (top ring), standard . . .	4	2A 99	
			Compression Rings, parallel (top ring), .010″ o/s . . .	4	2A 99F	
			Compression Rings, parallel (top ring), .020″ o/s . . .	4	2A 99A	
			Compression Rings, parallel (top ring), .030″ o/s . . .	4	2A 99B	
			Compression Rings, parallel (top ring), .040″ o/s . . .	4	2A 99D	
			Compression Rings, taper (2nd and 3rd ring), standard . .	8	2A 100	
			Compression Rings, taper (2nd and 3rd rings), .010″ o/s . .	8	2A 100F	
			Compression Rings, taper (2nd and 3rd rings), .020″ o/s . .	8	2A 100A	
			Compression Rings, taper (2nd and 3rd rings), .030″ o/s . .	8	2A 100B	
			Compression Rings, taper (2nd and 3rd rings), .040″ o/s . .	8	2A 100D	

NUTS FOR CYLINDER HEAD STUDS

16-H.P. Taxi and Hire-Car, A 70, A 125, A 135

New nuts, having a larger ultimate tensile stress have been introduced to reduce the possibility of stripping the threads when tightening down the cylinder head. The new nuts should be used for replacements.

SUMMARY OF ALTERATION

Description	Old Part	New Part	Type and Parts List Publication Number
Nuts for cylinder head studs	2K 3978	2K 6995	A 125, Pubs. 779, p. 5 430 A, p. 5 A 135, Pub. 624, p. 5 A 70, Pubs. 780A, p. 5 853, p. 5 Taxi, Pub. 558A, p. 5 Hire-Car, Pub. 728, p. 5

FOR YOUR RECORDS	PARTS LISTS
	STOCK CARDS
	PARTS ORDERED
	ALTERATIONS NOTED

Issue 11 *Published October 25, 1954*

REFACING WATER PUMP BODIES

All models fitted with carbon seal

This re-facing tool, GT 193, makes it possible for water pumps (fitted with a carbon seal) on any post-war Austin engine to be made serviceable in the event of a new or reconditioned pump not being available.

To carry out the re-facing operation the cutter is assembled on the arbor as shown in Fig. 1.

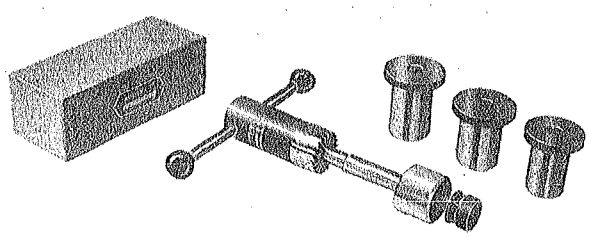

Fig. 1 *STR 1440*

With the pump completely stripped (see this Journal, Volume 19, section "Tools", pages 15–20) the appropriate pilot is selected and placed in position in the pump housing thus replacing the bearings and providing a centraliser for the cutter.

The arbor, carrying the cutter, is passed through the pump body and pilot until the cutter contacts the face to be cut, the thrust race is then fitted and held into position by the knurled nut.

NOTE: The thrust race is marked 'Top' on one face and this marking should be nearest the pilot when the race is fitted. The knurled nut should be tightened by hand only.

Rotating the tool in a clock-wise direction will speedily produce a smooth surface and cutting should not continue beyond that point. The cutter should not, at any time, be turned anti-clockwise, and the knurled nut must be kept hand tight as the cutting proceeds. No lubrication is necessary.

The re-facing operation should be carried out with the pump body held firmly in a vice, but great care should be taken to ensure that the casting is not damaged or distorted in any way. It is suggested that it is safest to fix it in the vice as shown in Fig. 2.

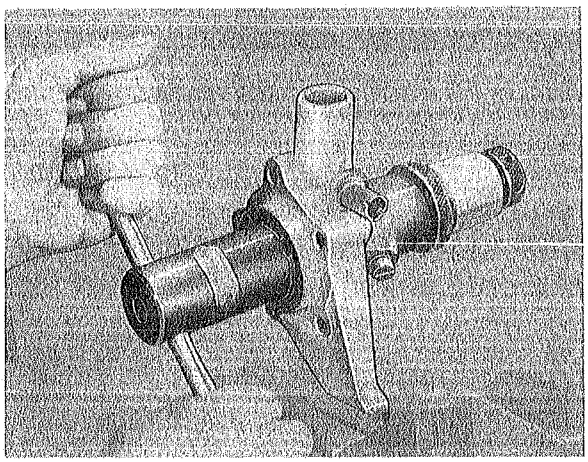

Fig. 2 *STR 1491*

Under no circumstances should the circular part of the castings be gripped in the vice.

It is usual to fit new bearings, carbon ring and rubber seal when reconditioning a water pump and the use of tools GT 60 or GT 61 (according to the pump model) will ensure the correct fitting of the new races.

VALVE SEAT GLAZE BREAKERS

All Models

Worn valve seats usually have a glass-hard surface and in order to prepare them for recutting and finishing, glaze breakers have now been made available which will enable the work to be done quickly and with economy in cutting tools. The cutters are designed to be used with the standard range of pilots and handle which are available for finishing valve seats.

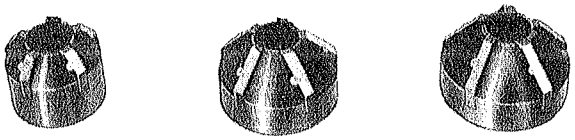

STR 1441

The glaze breakers must be used in the same manner as valve seat finishing cutters; a few light revolutions are sufficient to break the glass hard surface of the valve seat. After removing the glaze the seat must be finished by using the standard cutters. No attempt should be made to use glaze breakers on hardened steel valve seat inserts which may have been fitted in service. Instead the inserts should be replaced.

VALVE SEAT NARROWING CUTTERS

All Models

After valve seats have been recut several times, the width of the seat increases beyond the permitted dimension. The desired width can however be retained if these narrowing cutters are used.

They are of two types—one, having a 15° angle, for cutting the top edge of the seat and the other, having a 75° angle, for cutting the bottom edge of the seat. The narrowing cutters are designed to be used with the standard range of pilots and handle which are available for finishing valve seats.

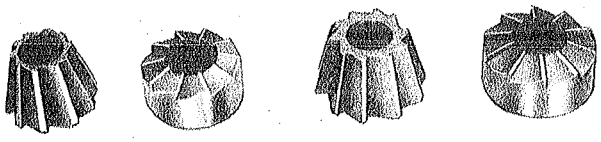

STR 1442

They are operated in the same manner as the valve seat finishing cutters; a few light revolutions are sufficient to reduce the width of the valve seat.

If hardened steel valve seat inserts have been fitted in service then these narrowing cutters must not be used: the inserts should be replaced.

The inlet valve seats should be $\frac{1}{16}$" wide and the exhaust $\frac{1}{8}$" wide.

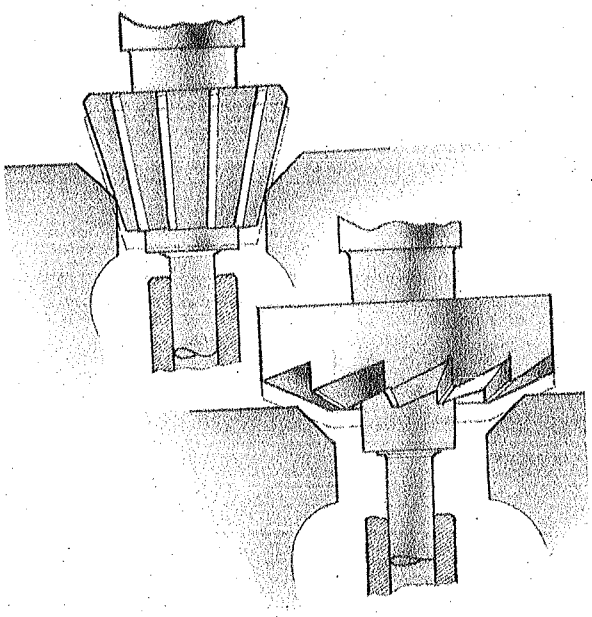

STR 1493

ENGINE WEAR

(Reconditioned Units)

Reported premature wear and failure of reconditioned engines is often caused by obstructions in the breather pipe from the rocker cover to the carburetter air cleaner. A reconditioned engine is usually fitted after a car has covered a high mileage, at which stage oil vapour has had its effect upon the rubber connection, causing either partial or total obstruction, and thereby preventing the engine from breathing. In consequence, sludge formation is built up inside the rocker cover causing considerable wear to the engine throughout. It is imperative that whenever a reconditioned engine is fitted, a new rubber connection between the air cleaner and rocker cover, should be used. At the same time the air cleaner should be washed out with clean petrol, excess petrol and any remaining grit should be "blown out" with an air line. If the air cleaner cannot be cleaned a replacement part should be fitted.

It is recommended that after every 6000 miles the air cleaner should be examined and thoroughly cleaned, and if any doubt exists as to the condition of the air cleaner or the rubber connection, replacement parts should be fitted.

ANTI-FREEZE SOLUTIONS

With reference to soluble oil in the water cooling system, see this Journal, Volume 24, section "Engine", page 11, it must be understood that anti-freeze solutions must not be added to the cooling water if soluble oil has already been added.

As a precaution against freezing it is advisable to drain the water from the radiator and replenish it with the recommended proportions of anti-freeze and fresh water.

PISTONS

10-H.P.

A new piston of the fully split skirt type is now available for service purposes on the above vehicle. The new piston gives better performance and compression than the old solid skirt piston.

INTERCHANGEABILITY

The new pistons are interchangeable in sets and will be supplied for replacements when stocks of the old ones are exhausted. The piston rings are not interchangeable with those used on the old pistons.

SUMMARY OF ALTERATION

Description	Number Off	Old Part	New Part	Type and Parts List Publication Number
Pistons with rings and gudgeon pin.	4	G3-193	11G 86	10-H.P. Pub. 214A, p. 5
Piston rings, parallel, top groove .	4	1G 939	11G 88	
Piston rings, taper, 2nd groove . .	4	1G 1213	11G 89	
Scraper rings	4	1G 1201	11G 90	

WATER PUMP OILING PLUG

Austin-Healey 100

The water pump oiling plug illustrated in the Owners' handbook Publication 996, page 37, Fig. 18 is incorrect, the plug shown being merely a blanking plug. The accompanying illustration shows the oiling plug at A on the right hand side of the pump body.

To ensure that owners are not confused, handbooks should be amended as and when possible particularly before an owner takes delivery of a new car.

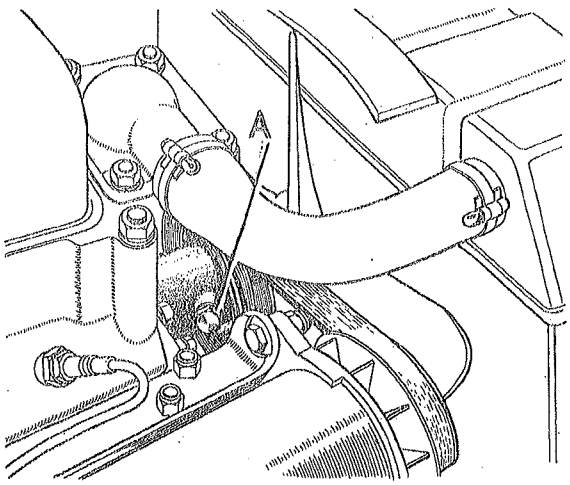

STR 1511

FOR YOUR RECORDS	PARTS LISTS
	STOCK CARDS
	PARTS ORDERED
	ALTERATIONS NOTED

FAN BELT AND PULLEYS

A 40 (GS.5), A 50 (HS.5)

A wedge type fan belt has been introduced, together with suitable pulleys. The new belt is similar to the old one, but the top width A has been reduced from $\frac{2}{3}\frac{1}{2}''$ (16.668 mm.) to $\frac{3}{8}''$ (9.525 mm.) and the thickness B from $\frac{7}{16}''$ (11.112 mm.) to $\frac{5}{16}''$ (7.937 mm.). The top width C of the groove in the crankshaft pulley, the dynamo pulley and the fan pulley has been reduced from $\frac{2}{3}\frac{1}{2}''$ (16.67 mm.) to $\frac{3}{8}''$ (9.52 mm.)—see illustration.

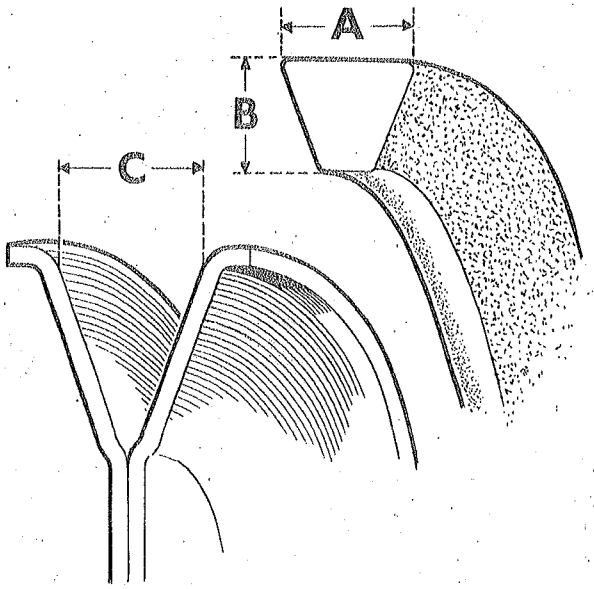

STR 1375

INTERCHANGEABILITY

The new fan belt, crankshaft pulley, dynamo pulley and fan pulley are interchangeable together but not separately.

SUMMARY OF ALTERATION

Type	Range	Plate	Description	Number per Vehicle	Austin Part Number	Parts List Publication Number
A 40 (GS.5)	To C.E.22737 and 23000–24203		Stripped engine unit .	1	SRG 21	Pub. 1099A, A 40 Engine, p. 1
	C.E.22738–22999 and 24204 on		Stripped engine unit .	1	8G-120	
A 50 (HS.5)	To C.E.22737 and 23000–24203		Stripped engine unit .	1	8G-203	Pub. 1099A, A 50 Engine, p. 1
	C.E.22738–22999 and 24204 on		Stripped engine unit .	1	8G-206	

Continued

FOR YOUR RECORDS	PARTS LISTS
	STOCK CARDS
	PARTS ORDERED
	ALTERATIONS NOTED

FAN BELT AND PULLEYS—*continued*

SUMMARY OF ALTERATION—*continued*

Type	Range	Plate	Description	Number per Vehicle	Austin Part Number	Parts List Publication Number
A 40 (GS.5) A 50 (HS.5)	To C.E.22737 and 23000–24203	B 22	Crankshaft pulley . .	1	1G 2317	Pub. 1099A, A 40 Engine, p. 3 A 50 Engine, p. 4
	C.E.22738–22999 and 24204 on		Crankshaft pulley . .	1	1G 2713	
	To C.E.22737 and 23000–24203		Water pump assembly, with pulley . .	1	1G 2520	
	C.E.22738–22999 and 24204 on		Water pump assembly, less pulley . . .	1	11G 121	
	To C.E.22737 and 23000–24203	A 90	Pulley for fan and pump	1	1G 2404	Pub. 1099A, A 40 Engine, p. 13 A 50 Engine, p. 14
	C.E.22738–22999 and 24204 on		Pulley for fan and pump	1	1G 2708	
	To C.E.22737 and 23000 24203	A 94	Fan belt	1	3H 2845	
	C.E. 22738 22999 and 24204 on		Fan belt	1	1G 2716	
	To C.E.22737 and 23000–24203	A 99	Pulley for dynamo .	1	2A 136	Pub. 1099A, A 40 Engine, p. 16 A 50 Engine, p. 17
	C.E.22738–22999 and 24204 on		Pulley for dynamo .	1	2A 412	

VALVE ROCKER AND ADJUSTING SCREWS

A 30, A 40 (GS.5), A 50 (HS.5)

To improve the security of the tappet adjusting screw, the boss of the valve rocker has been raised to increase the depth of the tapped hole by $\frac{1}{8}$" (3.17 mm), from $\frac{7}{16}$" (11.11 mm) to $\frac{9}{16}$" (14.29 mm). The tappet adjusting screw is increased in length by $\frac{3}{32}$" (2.38 mm) from $1\frac{9}{32}$" (32.54 mm) to $1\frac{3}{8}$" (34.92 mm).

INTERCHANGEABILITY

The new valve rocker and screw together are interchangeable. The new screw may be used for replacements of the old one. The new valve rocker and the new screw will be supplied for replacements when stocks of the old parts are exhausted.

SUMMARY OF ALTERATION

Type	Range	Plate	Description	Number per Vehicle	Austin Part Number	Parts List Publication Number
A30	To E.77122		Valve rockers with bush .	4	2A 19	Pub. 883B, Engine, p. 9
			Adjusting screws . . .	4	2A 26	
	E.77123 on		Valve rockers with bush .	4	2A 533	
			Adjusting screws . . .	4	2A 535	
A40, (GS.5) A50 (HS.5)	To C.E.140		Valve rockers with bush .	4	1G 2293	Pub. 1099A, A40 Engine, p. 8 A50 Engine, p. 9
			Adjusting screws . . .	4	1G 2296	
	C.E.141 on		Valve rockers with bush .	4	11G 45	
			Adjusting screws . . .	4	11G 47	

FOR YOUR RECORDS	PARTS LISTS
	STOCK CARDS
	PARTS ORDERED
	ALTERATIONS NOTED

Issue 14 Published December 13, 1954

PISTONS AND DISTRIBUTOR

A40 (GS. 5, GV. 5)

New pistons and a new distributor have been introduced to improve overall efficiency.

INTERCHANGEABILITY

The new pistons can be used in sets only to replace the old ones. The new distributor can be used to replace the old type.

SUMMARY OF ALTERATION

Type	Range	Plate	Description	Number per Vehicle	Austin Part Number	Parts List Publication Number
A40 (GS.5) (GV.5)	To C.E. 1101	B.38	Pistons with rings and gudgeon pin (standard) — Alternatives	4	1G 2426	Pub. 1099A, A40 Engine, p.5
			Pistons with rings and gudgeon pin (standard) — Alternatives	4	1G 2428	
			Pistons with rings and gudgeon pin (standard) — Alternatives	2	1G 2430	
			Pistons with rings and gudgeon pin (.010″ o/s)	4	1G 2426F 1G 2428F or 1G 2430F	
			Pistons with rings and gudgeon pin (.020″ o/s)	4	1G 2426A 1G 2428A or 1G 2430A	
			Pistons with rings and gudgeon pin (.030″ o/s)	4	1G 2426B 1G 2428B or 1G 2430B	
			Pistons with rings and gudgeon pin (.040″ o/s)	4	1G 2426D 1G 2428D or 1G 2430D	
	C.E.1102 on		Pistons with rings and gudgeon pin (standard) — Alternatives	4	11G 19	
			Pistons with rings and gudgeon pin (standard) — Alternatives	4	11G 21	
			Pistons with rings and gudgeon pin (standard) — Alternatives	4	11G 23	

Continued

PISTONS AND DISTRIBUTOR—*continued*

SUMMARY OF ALTERATION—*continued*

Type	Range	Plate	Description	Number per Vehicle	Austin Part Number	Parts List Publication Number
A40 (GS.5) (GV.5)	C.E. 1102 on		Pistons with rings and gudgeon pin (.010″ o/s)	4	11G 19F 11G 21F or 11G 23F	Pub. 1099A, A40 Engine, p. 5.
			Pistons with rings and gudgeon pin (.020″ o/s)	4	11G 19A 11G 21A or 11G 23A	
			Pistons with rings and gudgeon pin (.030″ o/s)	4	11G 19B 11G 21B or 11G 23B	
			Pistons with rings and gudgeon pin (.040″ o/s)	4	11G 19D 11G 21D or 11G 23D	
	To C.E.1101		Distributor, less fixing plate	1	3H 2847	Pub. 1099A, A40 Engine, p. 16.
	C.E.1102 on		Distributor, less fixing plate	1	11G 29	

EXHAUST TAIL PIPE SUPPORT BRACKET

A 40 Saloon

The support bracket welded to the exhaust tail pipe has been strengthened by increasing the section of the metal adjacent to the pipe. As interchangeability is not affected the part number, 1G 1855, of the exhaust tail pipe with support, remains unchanged.

The accompanying illustration shows the old support bracket A and the new one B.

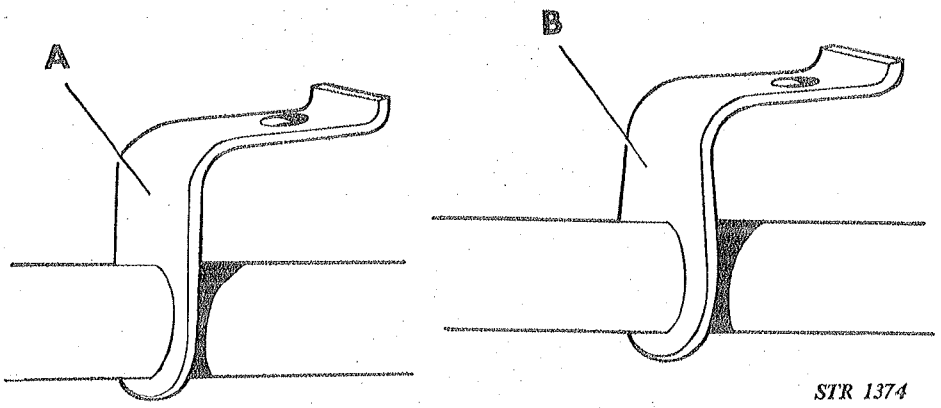

STR 1374

COMMENCING CHASSIS NUMBERS:—

A 40 Saloon, R.H. Steering	–	–	824769
L.H. Steering	–	–	824771

FOR YOUR RECORDS	PARTS LISTS
	STOCK CARDS
	PARTS ORDERED
	ALTERATIONS NOTED

THE OVERDRIVE UNIT

AUSTIN-HEALEY 100

The overdrive unit which is fitted to the Austin-Healey 100 is automatically operated by an electrical circuit. It comprises an hydraulically controlled epicyclic gear housed behind the 3-speed synchromesh gearbox in place of the normal type of rear cover.

THE PRINCIPLE (Fig. 1)

An epicyclic gear train is arranged to consist of a sun wheel A, planet wheels B, a planet wheel carrier D and an outer ring, the annulus C.

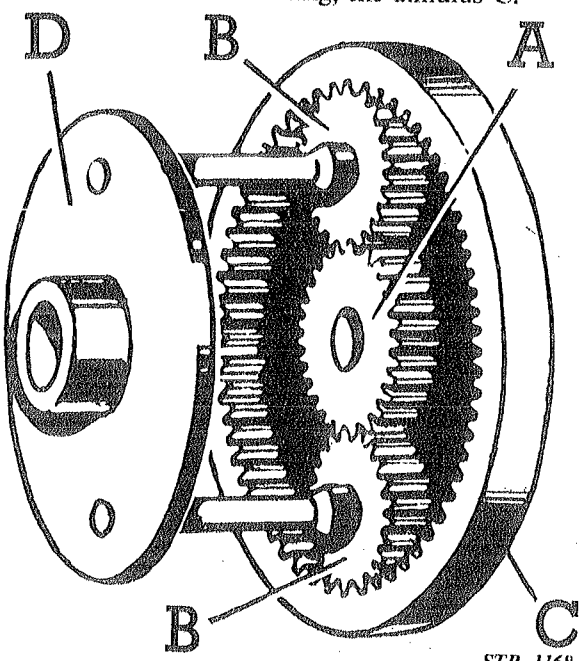

STR 1168

Fig. 1. Principle of an epicyclic gear

If the planet carrier is rotated while the sun wheel is locked to the annulus or the planet carrier, the whole gear train will rotate as a solid unit giving a direct through drive. If on the other hand the sun wheel is locked to the casing preventing it from rotating, and the planet carrier is rotated, the annulus will be overdriven at a higher speed than the planet carrier.

HOW IT WORKS

In addition to an epicycle gear train similar to the one depicted in Fig. 1, there is also an hydraulic pump, an hydraulic accumulator or pressure storage chamber, a roller clutch and a sliding cone clutch.

When in direct gear (Fig. 2) the overdrive is inoperative, the drive is taken from the driving shaft A through the rollers B of the roller clutch to the annulus C. It will be realised that the roller clutch, being uni-directional can transfer power in one direction only, and that if the car were to over-run the engine, the roller clutch would act as a free wheel leaving the car without engine resistance to assist braking. It would also be impossible to reverse the car for the same reason. This problem is overcome by means of the cone clutch D which slides on a splined extension E on the sun wheel and is pushed by eight compression springs so that the inner lining F engages with the corresponding cone on the outer rim of the annulus. This, therefore, locks the sun wheel to the annulus so that the entire gear train and cone clutch rotates as a solid unit, with the drive being taken through the roller clutch, and

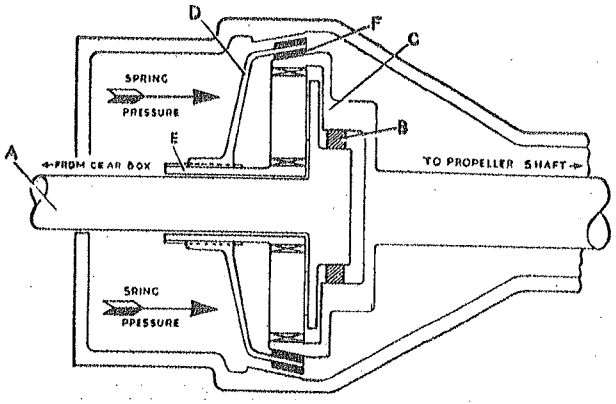

STR 1169

Fig. 2. Operation in direct drive

overrun and reverse being taken through the cone clutch.

When overdrive is engaged (Fig. 3) a valve in the unit is opened, applying hydraulic pressure from the pressure accumulator to two pistons which work in cylinders formed in the unit housing. These pistons exert pressure against the cone clutch member, overcoming the spring pressure and pushing the cone clutch (D) away from the annulus until the outer lining (B) presses against a conical brake ring (A) built into the main casing.

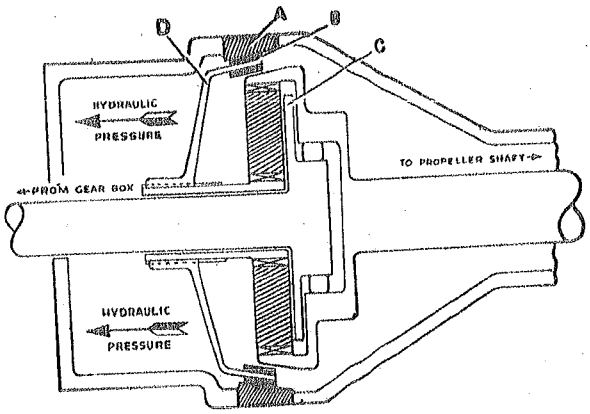

STR 1170

Fig. 3. Overdrive in operation

The sun wheel, which carries on its splined extension the cone clutch, is free to rotate on the driving shaft, therefore, when the cone clutch comes into contact with the brake ring, both cone clutch and sun wheel are brought to rest and held stationary. The planet carrier (C) which is splined to the driving shaft is driven round the stationary sun wheel so that the planets rotate and overdrive the annulus at a higher speed than the driving shaft. In overdrive, the outer member of the roller clutch overruns the inner member. Engine braking is again provided by the cone clutch which holds the sun wheel from rotating in either direction.

CONSTRUCTION (Fig. 4)

The mainshaft of the 3-speed synchromesh gearbox is extended to form the input shaft (1) of the overdrive unit. This shaft carries first of all a cam (3) operating a plunger type hydraulic pump (39). The pump delivers oil through a non-return valve (36) to the accumulator cylinder (35), in which a piston (34) moves back against a compression spring (33) until the required pressure is reached when relief holes are uncovered. Further back on the shaft there is a freely rotatable sun wheel (17) in one piece with an externally splined sleeve. Immediately behind the sun wheel and splined to the shaft is the planet carrier (15) in which are mounted the three planet wheels (16). At the rear of the input shaft and also splined to it is the inner member (20) of the roller clutch. The outer member (18) of the roller clutch is carried in the annulus (32) which is in one piece with the output shaft. Mounted on the splined sleeve of the sun wheel is a double cone clutch member (11). The cone clutch member can slide upon the splined sleeve of the sun wheel so that the inner lining (14) can make contact with a corresponding cone on the annulus, alternatively the outer lining (12) can make contact with a cast-iron brake ring (13) which forms part of the unit housing. To the hub of the cone clutch member is secured a ball bearing (9) housed in a flanged thrust ring (10). This ring carries on its forward face eight pegs (7) acting as guides to eight compression springs (8) by which the cone clutch member is held against the annulus. The thrust ring also has attached to it four pins (5) which carry two bridge pieces (6) bearing against two pistons (2) operating in cylinders formed in the unit casing. The pistons can push in the opposite direction to the thrust of the springs and are connected through a valve to the pressure accumulator.

In direct gear the drive from the input shaft is through the rollers (19) of the roller clutch which rise up the inclined faces of the inner member and become wedged between the inner and outer member of the clutch. The inner lining of the

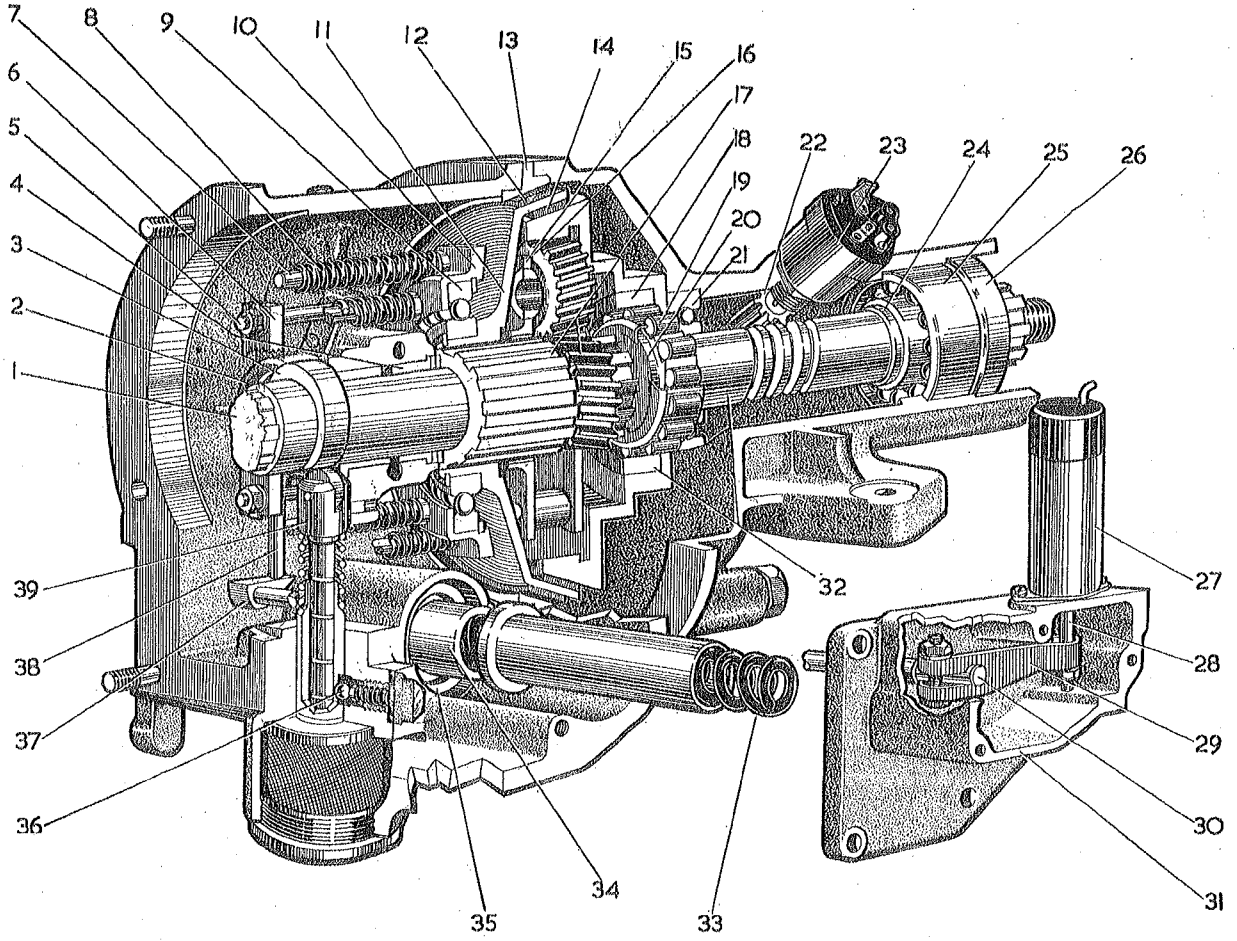

Fig. 4. Sectional view of the overdrive unit *STR 1171*

cone clutch is held locked by spring pressure against the annulus so that the entire gear train rotates as a solid unit to prevent a free wheel condition and to handle reverse torque.

The change into overdrive is done entirely automatically at 40–42 m.p.h. (64–68 k.p.h.). Driven from the rear end of the speedometer pinion (22) is a centrifugal switch (23) which operates to supply current to the operating solenoid (27) mounted on a bracket (31). The plunger (28) of the solenoid lifts the lever (29) rotating the valve operating shaft (30), so that the cam lever (37) lifts the operating valve spindle (38) admitting oil from the pressure accumulator cylinder into the two cylinders in the unit casing, to push the operating pistons (2) against the bridge piece (6). The cone clutch member now overcomes the eight clutch springs and slides forward along the splines of the sun wheel extension until the outer lining (12) contacts the stationary brake ring (13). The oil immersed cone clutch comes smoothly to rest together with the sun wheel resulting in a perfectly self synchronised change into overdrive. During the brief period of time when the change into overdrive is taking place the power continues to be transferred through the roller clutch until overdriving actually commences, so that the drive is without interruption and the change instantaneous. When changing from overdrive to direct drive the throttle may be kept open. The release of oil pressure from the operating cylinders is deliberately restricted so that the cone clutch takes

about half a second to move over to the direct drive position. As soon as contact between the cone clutch and the brake ring is broken, the load on the engine is released allowing the engine to speed up until the roller clutch ceases to be overrun and takes up the drive again. The change into normal is completed as the cone clutch contacts the annulus to prevent free-wheeling. When the throttle is kept partly open the engine speeds up when the cone clutch is released from contact with the brake ring, and the cone clutch then takes up the drive smoothly against the annulus. The electrical control circuit is so arranged that the overdrive once engaged will not disengage unless the throttle is partly open.

THE ELECTRICAL CONTROL GEAR

The operating valve lever is lifted automatically by the plunger of an electric solenoid. The solenoid has two separate coil windings with an internal switch which is closed when the solenoid

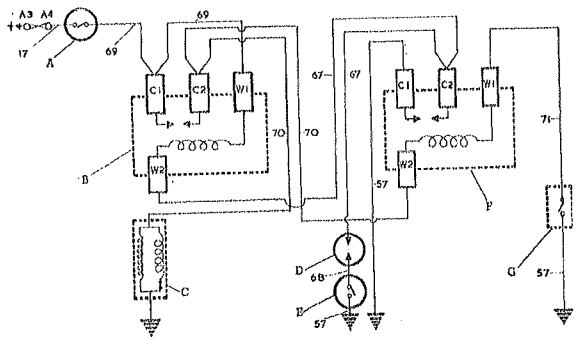

A. Gearbox switch.
B. Relay Number 1.
C. Operating solenoid.
D. Centrifugal switch.
E. Manual switch.
F. Relay Number 2.
G. The throttle switch.

17. Green.
57. Black.
67. Green with Red and Black.
68. Green with Black and Yellow.
69. Green with Brown and Yellow.
70. Green with Red and White.
71. Green with Black and White.

STR 1172

Fig. 5. Electrical Circuit

is not energized. The closing coil gives a powerful initial lift to open the valve, after which the internal switch opens leaving the holding coil to continue holding the valve open.

The current to operate the solenoid is taken first of all through a gear switch in the gearbox which limits the use of overdrive to 2nd and top gear. When the car reaches 40–42 m.p.h. (64–68 k.p.h.) a centrifugal switch closes, and energizes the windings of relay number 1, the contacts of which close and pass current to energize the solenoid. There is a manually operated switch wired in series with the centrifugal switch and mounted on the dash panel A (Fig. 6), which permits the driver to cut out the overdrive at his own discretion on such occasions as overtaking or ascending a hill.

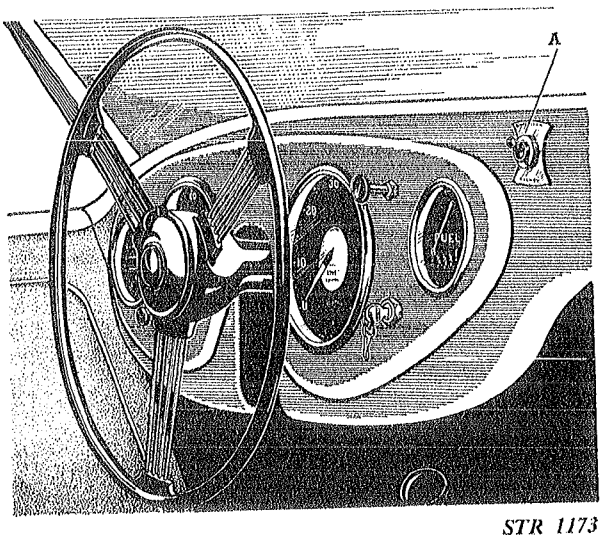

STR 1173

Fig. 6. The Manual Switch

The change from overdrive to normal is also made automatically by the centrifugal switch as the car slows down to 35–30 m.p.h. (48–56 k.p.h.) provided that the throttle is not closed.

As previously mentioned it is desirable that the throttle should be open when the change from overdrive to normal takes place, thus allowing the engine to increase speed to suit the lower gear, because if the change takes place with a closed throttle, and the car overrunning the engine, some noticeable braking effect would occur. This is prevented by a rotary throttle switch, which is connected to the accelerator controls in such a way that the switch is closed when the throttle is closed, and opens when the throttle is

more than one-fifth open. When the car is in overdrive and the throttle is closed the switch passes current to the windings of number 2 relay, the contacts of which short circuit the centrifugal and manual switches, so as to render them non-operative. When the throttle is opened the throttle switch opens allowing the centrifugal switch and manual switch to operate normally.

THE HYDRAULIC SYSTEM

The hydraulic system is supplied with oil by a plunger type pump operated by a cam on the gearbox third motion shaft extension. The pump body is a press-fit into the overdrive front casing, and is fed with oil from the sump of the casing through a fine mesh strainer. The oil is delivered through a non-return ball valve to the accumulator cylinder, in which a piston moves back against a powerful compression spring until the required pressure of 430–460 lb. per square inch (30.23–33.34 kilogrammes per square centimetre) is reached, when relief holes are uncovered. From the relief holes the oil is led through drilled passages in the overdrive body to an annular groove between the two steady bushes for the gearbox shaft extension. Radial holes in the shaft collect the oil and deliver it along an axial drilling to other radial holes in the shaft, providing positive pressure-fed lubrication to the sun wheel, thrust washers, planet carrier and planet bearings. From the accumulator cylinder oil under pressure is supplied to the operating valve chamber by way of a drilled passage in the unit casing. When the operating valve is lifted, the oil flows under pressure via another drilled passage to the two operating pistons which work in cylinders formed in the unit casing. When the operating valve is closed, the oil in the operating cylinders is returned to the sump.

CARE AND LUBRICATION

The oil in the overdrive is common with that in the synchromesh gearbox. The oil to use is ordinary mineral oil, in the following grades:—

Normal summer climates – –	S.A.E.30
Normal winter climates – –	S.A.E.20

Under no circumstances should extreme pressure gear oils such as S.A.E.80, S.A.E.90 be used because the centrifugal effect of the planets may separate some of the additives from the oil and cause sludging. The oil capacity of the gearbox and overdrive unit is 4¼ pints (2.556 litres), and the correct level must be carefully maintained. It will be necessary to remove the drain plugs from both gearbox and overdrive unit to drain them, but refilling is done through the gearbox only.

Refill the gearbox with oil after draining and then drive the car a short distance, after which top up with oil because some of the oil will have been taken into the hydraulic system. Do not run car with no oil in the unit because air may enter the hydraulic system.

Cleanliness is the keynote to satisfactory performance of any hydraulic system. The smallest amount of dirt or "fluff" from a wiping cloth which finds its way into a valve will cause a great deal of unnecessary difficulty. Pay particular attention to the clean condition of the oil used for filling, and carefully clean all around the filler plug each time before removing it. Regular attention to these small details will be rewarded by long and trouble-free service. Access to the gearbox filler plug C (Fig. 14) is obtained through a small panel, secured by one screw and positioned at the extreme front right-hand side of the centre tunnel.

DIAGNOSIS AND RECTIFICATION OF FAULTS

Any faults in the overdrive or its control gear will become manifest in one or other of five symptoms. These five symptoms are given below and each one is accompanied with a procedure for finding and rectifying the fault in the quickest possible time. The tests given are arranged in progressive order so as to avoid any unnecessary dismantling or removal of parts. As familiarity with the overdrive increases, almost any fault can be isolated and rectified within a short time.

Each of the tests given is based on the assumption that the previous tests have been satisfactorily carried out, and that the unit has been working normally prior to the fault developing. When a unit has been removed from the gearbox and replaced, other faults can occur due to wrong assembly but these faults are given separately in the sections dealing with fitting, stripping and rebuilding of the overdrive.

SYMPTOM NUMBER 1—OVERDRIVE DOES NOT ENGAGE

1. Insufficient oil in the unit

The gearbox must be filled to the level of the filler plug. Be sure to clean carefully around filler hole before removing plug.

2. Electrical Control Gear

The electrical control circuit should be checked through in the following progressive order.

(*a*) *Blown fuse.* The feed to the overdrive is taken from the ignition circuit, through the 35-ampere fuse A3-4. Should the fuse be blown the various auxiliary circuits, namely, direction indicator, petrol gauge, windscreen wiper and heater motor will also be inoperative. Replace the fuse, and switch on the ignition. If the fuse again blows it will be necessary to trace the faulty circuit by disconnecting all of the auxiliaries from A 4 and reconnecting each circuit in turn and operating it. If a faulty circuit is found, examine the wiring for "short" circuits.

(*b*) If the fuse is not blown and the wiring is in order the next thing to do is to check that there is a feed to relay number 1 which is the left-hand one of two identical relays mounted side by side beneath the dash on the driver's side of the car (Fig. 7). With the engine stopped and the ignition switch 'on' engage top gear, connect a test lamp from terminal C.1 on relay number 1 to earth. If the lamp fails to light, then the gearbox switch D (Fig. 16), is faulty or maladjusted and must be adjusted or replaced as necessary. The switch is the plunger type, operated by the change speed cross shaft, and adjustment is effected by adding fibre washers as required between the switch and the screwed adaptor in the gearbox casing.

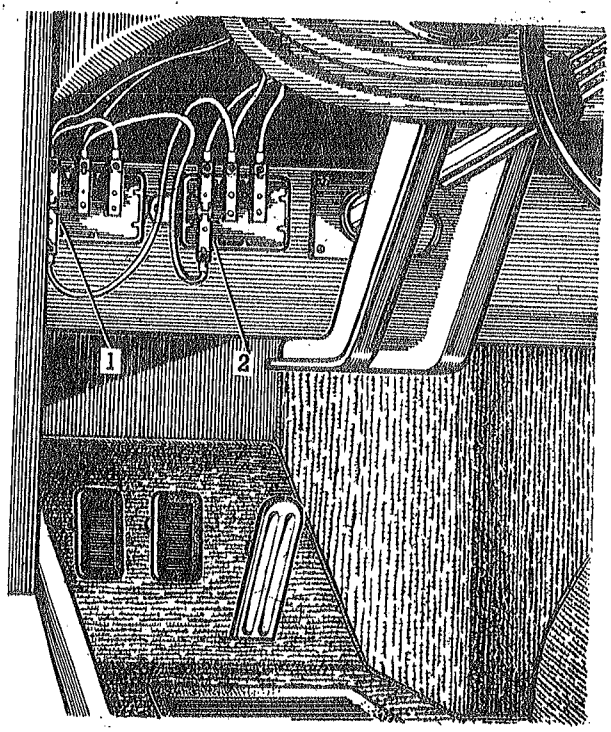

STR 1174

Fig. 7. The Relays

DIAGNOSIS AND RECTIFICATION OF FAULTS—*continued*

(*c*) If the previous test is satisfactory, relay number 1 should now be tested. With the ignition switch still 'on' and top gear engaged, use a screwdriver blade to short circuit terminal W.2 to the metal casing of the relay, and listen for the "click" as the solenoid operates. If there is no "click", either relay number 1 or the solenoid is faulty. To find out which, put the screwdriver blade across the terminals C.1 and C.2 of relay number 1. If the solenoid now operates the relay number 1 is faulty and must be replaced. If the solenoid does not operate then the solenoid is faulty and must be replaced. To replace the solenoid, or investigate any further it is necessary to remove the centre tunnel cover which is held to the floor by six self-tapping screws.

(*d*) If the solenoid is working correctly in the previous test the centre tunnel must be removed and the centrifugal switch tested. With the ignition switch 'on', top gear engaged and the overdrive manual switch 'on', place the screwdriver blade across the terminals of the centrifugal switch. If the solenoid operates, it indicates a faulty centrifugal switch, which should be replaced by a new one and the car road tested to confirm the diagnosis.

(*e*) If the solenoid does not operate in test D the manual switch may be faulty. To check this, switch on ignition, engage top gear, place screwdriver blade across the terminals C.1 and C.2 of relay number 2 which is the right-hand one of two such relays under the dash (Fig. 7). Operation of the solenoid indicates a faulty manual switch which must be replaced.

(*f*) If the action of the solenoid is weak, or if the solenoid makes a "buzzing" noise, it is defective and must be replaced.

(*g*) If overdrive operates, but the solenoid overheats, the solenoid is defective and must be replaced. The normal current consumption of the system should be approximately 1.0 to 1.5 amperes. Overheating of the solenoid will be accompanied by a current consumption of approximately 18–20 amperes, and the solenoid will soon burn out.

(*h*) If the overdrive cuts in or out at a wrong speed, the centrifugal switch is probably faulty and the car should be road tested with a new one. NOTE: If the car is moved after the centrifugal switch is removed, the speedometer pinion will become displaced. Special attention should be paid that the speedometer pinion is correctly engaged before fitting the centrifugal switch.

3. Solenoid Lever not set correctly

The solenoid lever, once set should not normally require any further adjustment. Checking the setting of the lever takes only a few seconds and should be carried out at this point in case any initial "bedding down" has caused maladjustment. On the opposite side of the overdrive to the solenoid will be seen a valve setting lever C mounted on the end of the valve operating shaft D. In the outer end of the lever is a $\frac{3}{16}$" (4.7625 mm) diameter hole A, which must line up with a similar hole B in the overdrive casing when the lever is in the correct overdrive position (Fig. 8).

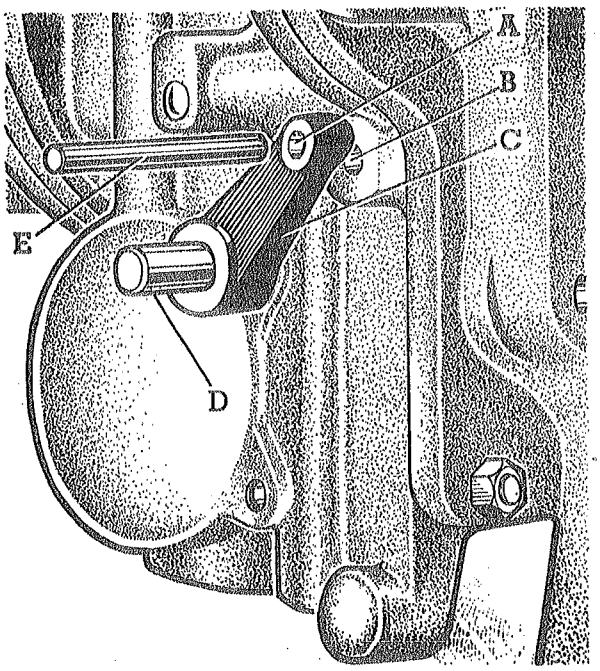

STR 1175

Fig. 8. Setting the operating valve

DIAGNOSIS AND RECTIFICATION OF FAULTS—*continued*

To check this setting, switch on the ignition, engage top gear and switch overdrive manual switch "on". Short together the two terminals of the centrifugal switch with the blade of a screwdriver, when the solenoid will operate and move the valve operating shaft to the overdrive position. The solenoid will remain energized after the screwdriver point is taken from the centrifugal switch because R.2 is a holding relay, and the solenoid will continue to hold the lever up until the accelerator pedal is depressed. The hole in the setting lever should now be in line with the hole in the overdrive casing, and it should be possible to insert a $\frac{3}{16}$" (4.7625 mm) diameter pin E Fig. 8) or drill shank into the two holes. If the holes do not line up, the solenoid lever must be reset. Proceed as follows:—

(1) Remove the cover plate E from the solenoid bracket.

(2) Slacken off the clamping bolt A in the solenoid lever.

(3) Energize the solenoid as already described and put a $\frac{3}{16}$" (4.7625 mm) diameter pin through the hole in the valve setting lever into the hole in the casing.

4) Hold the solenoid lever C downwards so that it bears lightly against the head of the plunger bolt D and tighten the clamping bolt A (Fig. 9). Make sure that there is no end-float in the valve operating shaft by pressing the valve setting lever and the solenoid lever inwards simultaneously when tightening the solenoid lever bolt. This expands the oil seals and prevents oil leakage.

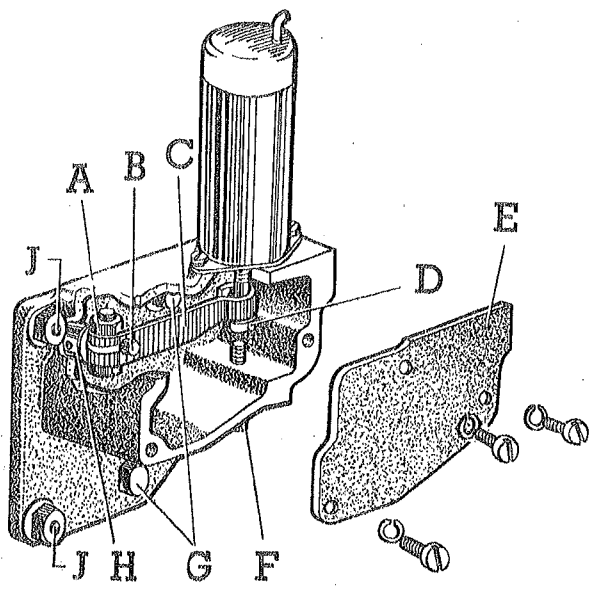

STR 1176

Fig. 9. Adjusting the solenoid lever

(5) Remove the pin from the setting lever and operate the solenoid several times by switching the ignition on and off with the terminals of the centrifugal switch short circuited together.

(6) Check that the hole in the valve setting lever corresponds with the hole in the casing by inserting the pin again. If the two holes do not quite line up, a fine adjustment can be made by screwing the solenoid plunger bolt D further in or out of the plunger, to adjust this bolt it will be necessary to remove and replace the split pin which secures the two parts.

(7) After ensuring that the setting is correct replace the cover to the solenoid bracket.

(8) The adjusting screw F is to prevent the plunger bolt from falling too low when the solenoid is not energized. The screw should be set to give $\frac{1}{4}$" (6.35 mm) clearance between the head of the plunger bolt and the end of the screw when the plunger is lifted. (On later models, the use of this screw is discontinued, and a rubber stop used instead).

4. Operating valve leaking due to foreign matter on the valve seat

The operating valve chamber (Fig. 10) is an enlargement at the top of a vertical bore in the overdrive casing. It is sealed with a screwed plug A, and contains a spring B and plunger C, which hold a steel ball D downwards against a seating F, to prevent oil from circulating to the operating cylinders. The valve J is a hollow spindle sliding in the bore with a conical seating G for the steel ball in the top end. When the valve is lifted by the cam lever K it seats against the ball which is then lifted, admitting oil from the pressure accumulator via the drilled passage E to the passage L and into the operating cylinders, moving the pistons forward to engage the cone clutch.

When the valve is lowered, the ball is allowed to come on to its seating in the housing, cutting off the supply of oil from the accumulator.

DIAGNOSIS AND RECTIFICATION OF FAULTS—*continued*

Further lowering of the valve brings it out of contact with the steel ball, allowing the oil from the operating cylinders to return along passage "L" and down the inside of the valve, to discharge through the small restrictor jet H into the sump of the overdrive body. The jet is of such size that the cone clutch takes about half a second to move back under the influence of the clutch springs.

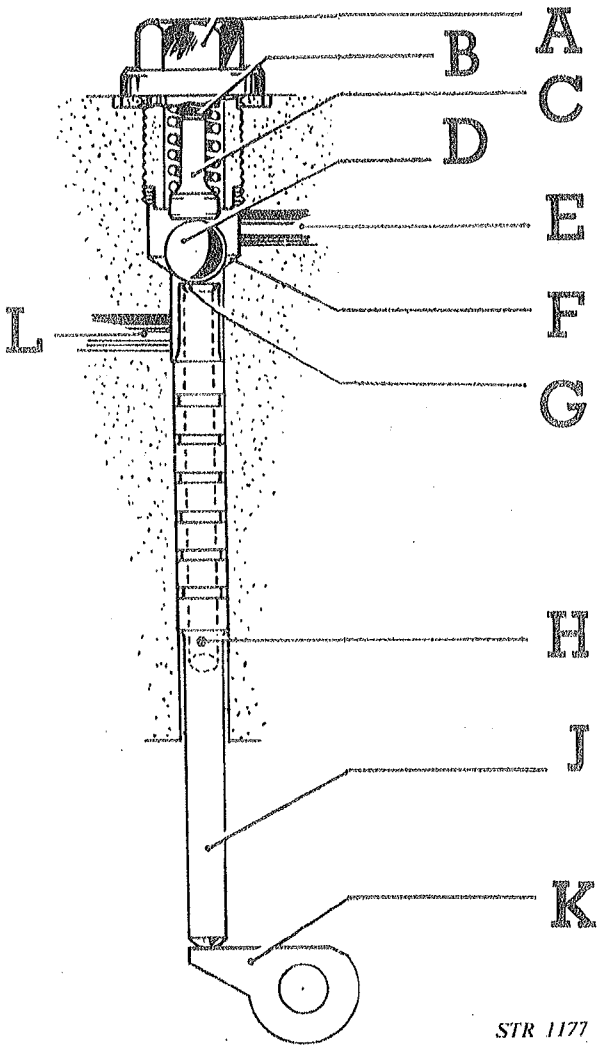

Fig. 10. The operating valve

The operating valve plug is placed at the top right-hand side of the overdrive casing A (Fig. 16). If the previous checks have all been satisfactory, this plug should now be removed. *Before removing the plug it is very important to release all oil pressure from the system by operating the valve setting lever by hand about* 10 *times.* After removing the plug, spring, and plunger, the steel ball will be seen in the bottom of the valve chamber, a small magnet will be found useful for removing the ball from the chamber. To remove the valve a short length of wire, approximately $\frac{3}{32}$" (2.3812 mm) diameter should be inserted into the drilling in the centre of the valve, which can then be lifted out. Clean and examine the valve seats. If necessary the ball seat G on the operating valve can be re-finished by gently grinding in a spare $\frac{5}{16}$" (7.937 mm) diameter steel ball, using fine grade grinding paste. Do not use the actual ball from the unit for grinding in, and be sure to wash the valve clean before refitting it. If necessary, the ball should be reseated in the valve chamber by tapping it gently on to the seat F, using a soft copper drift.

5. No Oil Pressure

If the unit still fails to operate, and the operating valve is seating and lifting correctly check that the oil pump is working. Jack up the rear wheels of the car, remove the operating valve plug, and start the engine. Engage top gear with the engine ticking over slowly and watch for oil being pumped into the valve chamber. If none appears, then the pump is not working, probably due to foreign matter on the seat of the non-return valve. A flow of oil into the operating valve chamber does not prove that the oil pressure is correct, a pressure of about 430–460 lb. per square inch (30.23–33.34 kilogrammes per square centimetre) is required. An adaptor, part number 7H 5899, is available and should be used to replace the operating valve plug in conjunction with an oil pressure gauge reading up to 800 lb. per square inch (56.24 kilogrammes per square inch) and suitable for screwing into the $\frac{1}{8}$" B.S.P. thread in the mouth of the adaptor. Low pressure indicates leakage. To remedy this fault, proceed as follows:—

1. Remove the drain plug G and drain off oil (Fig. 11).

DIAGNOSIS AND RECTIFICATION OF FAULTS—*continued*

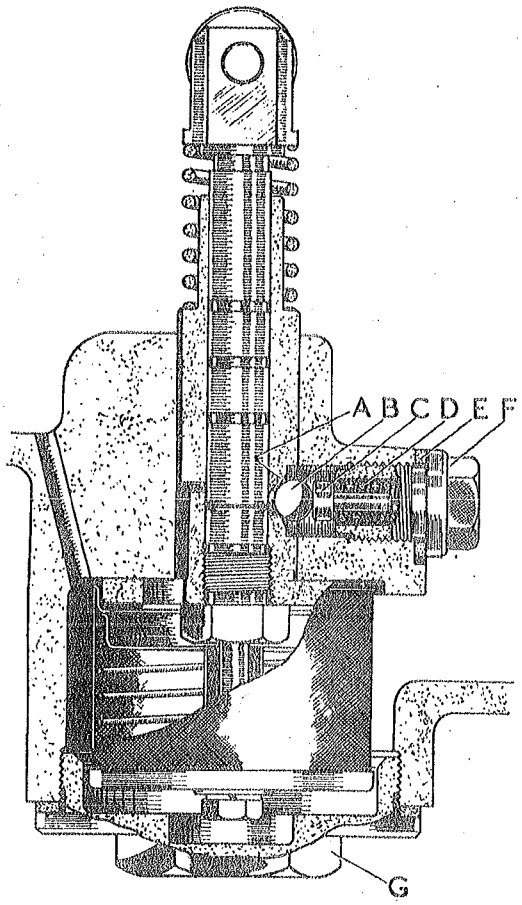

STR 1178

Fig. 11. The oil pump

2. Remove cover from solenoid bracket.
3. Remove solenoid.
4. Slacken off clamping bolt in solenoid lever and remove lever with the solenoid plunger attached (Fig. 12).
5. Remove the distance collar H (Fig. 9).
6. The solenoid bracket is secured by two $\frac{5}{16}$" (7.937 mm) diameter studs and two $\frac{5}{16}$" (7.937 mm) diameter bolts, the heads of the bolts are painted red. *Remove the nuts from the studs before touching the bolts.* This is important. The two bolts should now be slackened off together, using box spanners as shown releasing the tension on the accumulator spring, which abuts the solenoid bracket.

When the tension on the spring is released the two bolts which are 2" (5 cm) long can be taken right out and the solenoid bracket, accumulator spring and spring tube removed (Fig. 13).

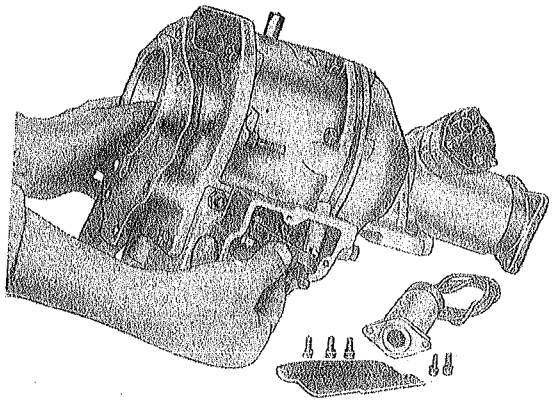

STR 1179

Fig. 12. Removing the solenoid lever

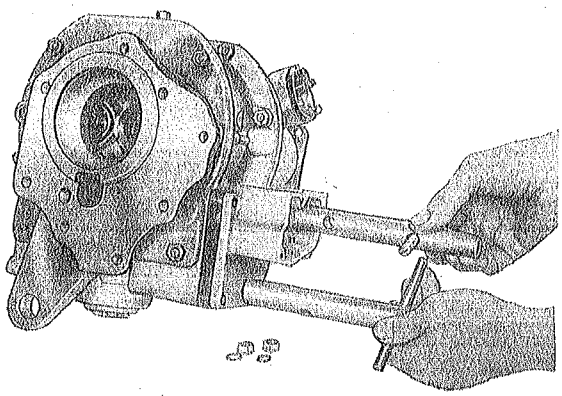

STR 1180

Fig. 13. Releasing the pressure from the accumulator spring

7. The pump valve plug F can now be unscrewed with a box spanner, and the spring D, plunger C and ball B removed (Fig. 11).
8. Clean the valve seat A and reseat the ball if necessary by gently tapping it on to its seat with a copper drift.

Re-assembly is the reverse of the above operations, but ensure that the valve plug is well tightened on to the soft copper washer E (Fig. 11), which should be replaced by a new one if damaged in any way.

DIAGNOSIS AND RECTIFICATION OF FAULTS—*continued*

Do not forget to replace the accumulator spring tube 35 (Fig. 43) when re-assembling, failure to do so will result in the piston housing becoming displaced as soon as the unit is driven. Also ensure that the end of the accumulator spring engages on the short dowel on the rear of the solenoid bracket.

After re-assembly it will be necessary to reset the solenoid lever, as already described.

NOTE: Figures 12 and 13 are shown for convenience with the overdrive removed from the car, but the procedure is exactly the same with the unit in the car.

SYMPTOM NUMBER 2—OVERDRIVE DOES NOT RELEASE

IMPORTANT. If this happens, do not try to reverse the car, because a transmission "lock" would occur in reverse, and damage may result.

1. Blocked Restrictor Jet in the operating valve

A symptom of this is failure to get back into normal, or a slow return to normal drive as the oil slowly leaks out through the blocked jet. The cure is to remove the operating valve as already described and clear the jet.

2. Electric Control not operating correctly

If the unit remains in overdrive after the ignition has been switched off, then the electrical circuit is not at fault. If, however, the unit cuts in and out with the ignition switch, a short circuit in the wiring or a faulty relay must be looked for.

3. Solenoid Lever not set correctly or solenoid plunger "sticking"

It is very unlikely that any maladjustment of the lever will develop to prevent overdrive from releasing. Make sure that there is $\frac{1}{4}$" (6.35 mm) clearance between the solenoid adjusting screw F (Fig. 9) and the head of the solenoid bolt when the plunger is lifted. The setting and working of the valve setting lever should be checked as already described, and corrected if necessary.

4. Sticking Cone Clutch

This fault has been known to occur as a result of heating up after a long run on a new unit, before the linings are fully bedded in. The clutch invariably releases itself when it has cooled down a little, or it can be released by giving a sharp blow with a hide hammer on to the brake ring between the body of the overdrive and the rear cover.

5. Damaged parts within the unit necessitating removal and dismantling of the unit for inspection.

SPECIAL NOTE. Internal damage is very unusual and all tests should be re-checked before deciding to remove or dismantle the unit.

SYMPTOM NUMBER 3—CLUTCH SLIP IN OVERDRIVE

1. Insufficient oil in gearbox

The correct oil level must be maintained.

2. Solenoid lever not set correctly

Check the setting as already described.

3. Insufficient hydraulic pressure

Probably due to foreign matter on the ball seat of the pump valve, or on the ball seating on the operating valve. Check the pressure with the adaptor and gauge as already described, and clean and reseat valve if required.

4. Worn or burned cone clutch outer lining

This is not experienced even after very large mileages unless the car has been driven for a long time in overdrive, with the clutch slipping due to causes 1, 2 or 3, given above. Removal of the unit and replacement of cone clutch member, would be necessary in this case.

DIAGNOSIS AND RECTIFICATION OF FAULTS—*continued*

SYMPTOM NUMBER 4—CLUTCH SLIP IN REVERSE OR FREE WHEEL CONDITION ON OVERDRIVE

1. Blocked restrictor jet in operating valve causing sluggish return movement of the cone clutch

Clean the restrictor jet as already described.

SYMPTOM NUMBER 5—OVERDRIVE ENGAGES BUT DROPS OUT WHEN THE CAR SLOWS DOWN WITH THE THROTTLE CLOSED, ACCOMPANIED BY A NOTICEABLE BRAKING EFFECT

1. Wrong setting of the Rotary Throttle Switch

The setting of the switch is very critical, and it should be realised that any adjustment of the accelerator controls, or carburetter throttle may also affect the setting of the throttle switch which must be set to open at $\frac{1}{5}$th throttle opening. If this fault develops, it will probably be after the accelerator controls or the carburetter have been adjusted, and the switch should be tested and if necessary reset as follows:—

Take a feed from terminal A.1 on the fuse block through a low current consumption test lamp F (a 12-volt, 2.2-watt dash panel bulb is suitable) to the top contact E of the rotary throttle switch D (Fig. 14).

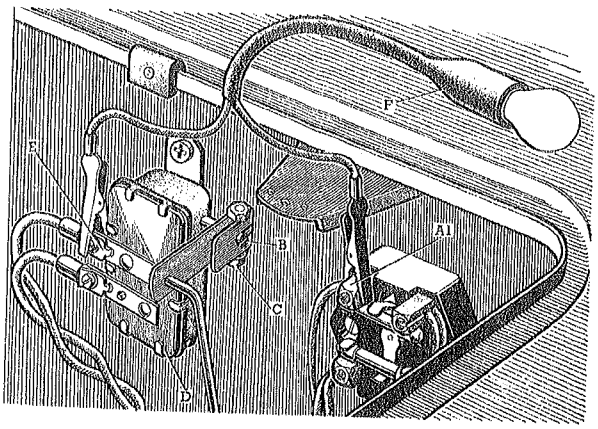

STR 1181

Fig. 14. Setting the throttle switch

When the throttle is closed, the bulb should light at full brilliance and should go very dim when the throttle is opened beyond $\frac{1}{5}$th. The bulb does not go completely out because when the switch opens there remains a high resistance path to earth through the windings of the relay R.2 and the solenoid. One-fifth opening of the throttle can be accurately gauged by inserting a .048" (1.319 mm) feeler C between the throttle stop A and the throttle stop screw B (Fig. 15). If the setting is incorrect slacken the throttle switch lever clamping bolt C and adjust the switch by turning the shaft B (Fig. 14) which has a slotted end to take a screwdriver.

NOTE: If the lamp will not light at full brilliance at all, the rotary throttle switch is faulty and must be replaced.

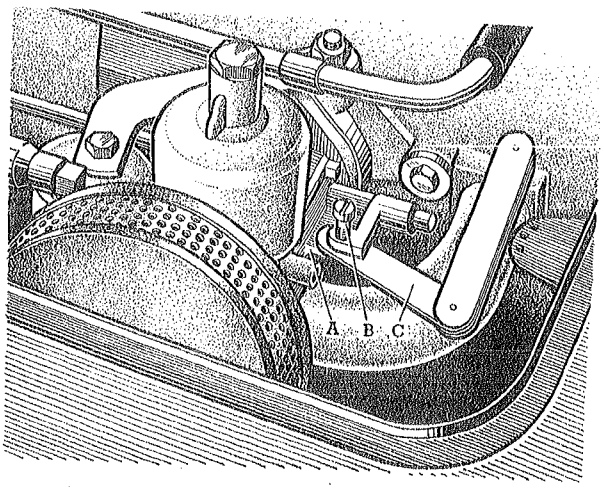

STR 1182

Fig. 15. Gauging the throttle opening

2. Faulty operation of Relay Number 2

If the rotary throttle switch is correctly set and in good order then relay number 2 is probably at fault. Test as follows:—

(*a*) Disconnect terminal W.2 on relay number 2.

(*b*) Switch on ignition and engage top gear.

(*c*) Using a short piece of wire short circuit terminal W.1 on relay number 1 to terminal W.2 on relay number 2. If solenoid fails to operate with throttle closed, relay number 2 is defective and must be replaced.

GEARBOX AND OVERDRIVE—REMOVAL AND REPLACEMENT

REMOVAL

1. Jack up front of car and place on to wheel stands or tressels, or position car over a pit.
2. Turn battery master switch in rear boot to the "off" position.
3. Remove both front seats, which are held to the floor by two setscrews each, and remove carpets and matting.
4. Remove centre tunnel cover, which is screwed to the floor with six self-tapping screws, and the centre panel on the front bulkhead which is also held with six self-tapping screws. The gearbox and overdrive unit is now exposed for removal (Fig. 16).

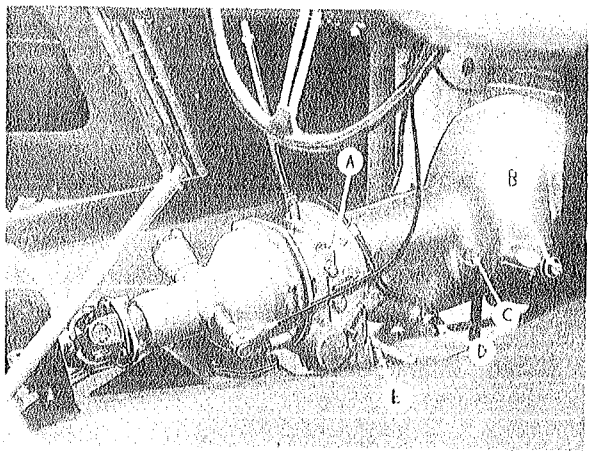

STR 1183

Fig. 16. Transmission exposed for removal

5. Remove the bottom bolts which hold the gearbox to the engine rear plate.
6. Remove starter.
7. Disconnect the clutch operating lever from the clutch operating shaft. It is only necessary to remove the nut B (Fig. 16). The lever will then slide free. The clutch lever can be seen hanging freely at A (Fig. 18).
8. Remove the engine rear tie rod which can just be seen at E (Fig. 16).
9. Disconnect the overdrive harness A and speedometer cable B (Fig. 17).
10. Remove the four propeller shaft bolts and the rear mounting bolts.
11. Jack up rear of engine or alternatively use a lifting block attached to the rear of the engine, until the mounting flange on the overdrive unit is five inches clear of the mounting rubbers, as shown in Fig. 17. It may also be necessary to slacken the nuts which hold the radiator to the radiator brackets, to allow the radiator to tilt forward slightly giving clearance for the fan when the unit is lifted.

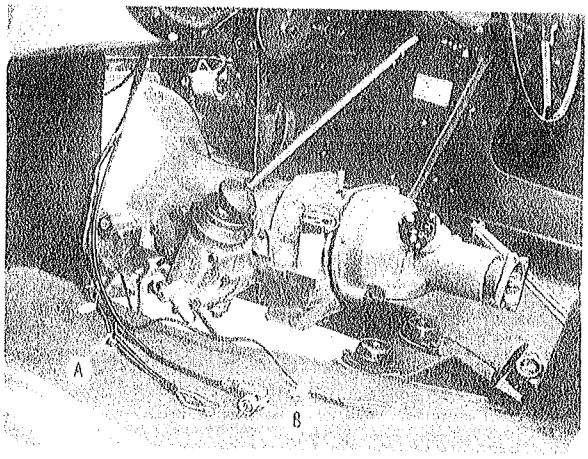

STR 1184

Fig. 17. Transmission ready for removal

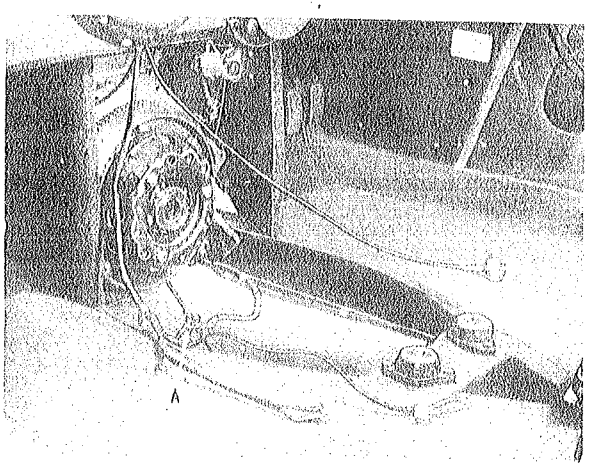

STR 1185

Fig. 18. Interior of car with transmission removed

12. Remove the top gearbox mounting bolts.
13. The gearbox and overdrive unit can now be lifted clear by hand, taking care not to strain the clutch centre plate by tilting the gearbox out of alignment.

RE-ASSEMBLY

Re-assembly is carried out in reverse order. If the clutch has been removed, it will be necessary to re-align the clutch centre plate using tool GT 80.

FITTING THE OVERDRIVE TO THE GEARBOX

Experience has shown that it is quicker to remove the gearbox and overdrive from the car altogether, and to remove or refit the overdrive on the bench, than to fit an overdrive with the gearbox in the car. The overdrive can be removed very easily from the gearbox by carrying out the operations 1 and 2 in the following notes, when the gearbox and overdrive can be pulled apart, leaving the adaptor plate bolted to the gearbox.

1. Very carefully clean the outside of the overdrive unit and the gearbox. Cleanliness is of paramount importance.

2. Remove the adaptor plate A which forms the front cover of the unit, and is fixed by four short studs B screwed into the overdrive casing, and two long ones C screwed into the adaptor plate (Fig. 19).

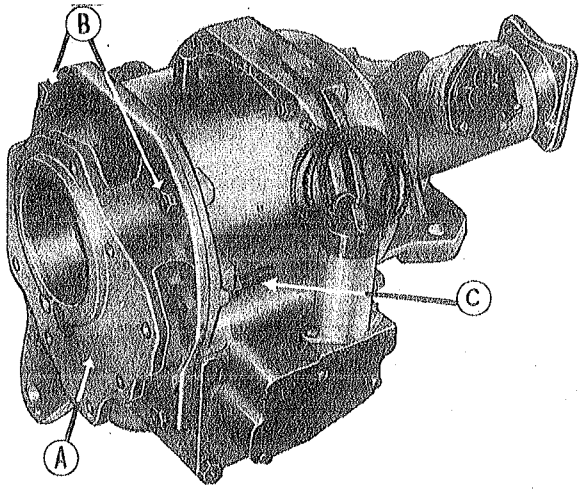

STR 1186

Fig. 19. Assembled overdrive unit

Remove the nuts from the four short studs first of all, and then simultaneously remove the nuts from the two long studs, releasing the pressure from the clutch springs. Pay attention to the degree of stiffness which is given to these two nuts by the pressure of the clutch springs, so that any undue pressure required to tighten these nuts later on would be noticed.

3. Press the ball journal bearing A for the mainshaft into the housing on the adaptor plate and fit the circlip B (Fig. 20).

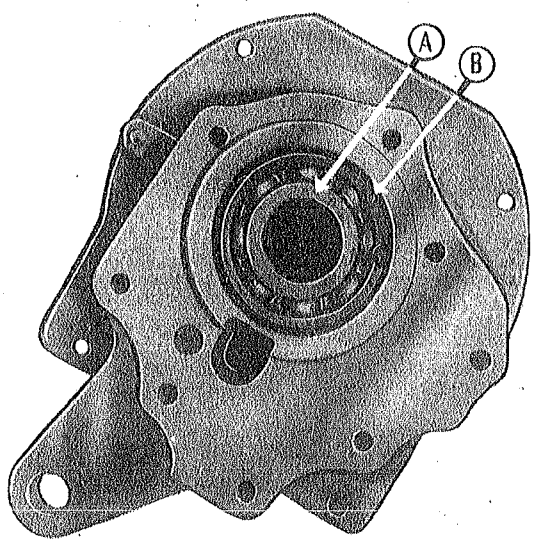

STR 1187

Fig. 20. Adaptor plate with mainshaft bearing

4. Screw the three studs A into the holes shown in the rear face of the gearbox and lay the paper joint washer in position (Fig. 21).

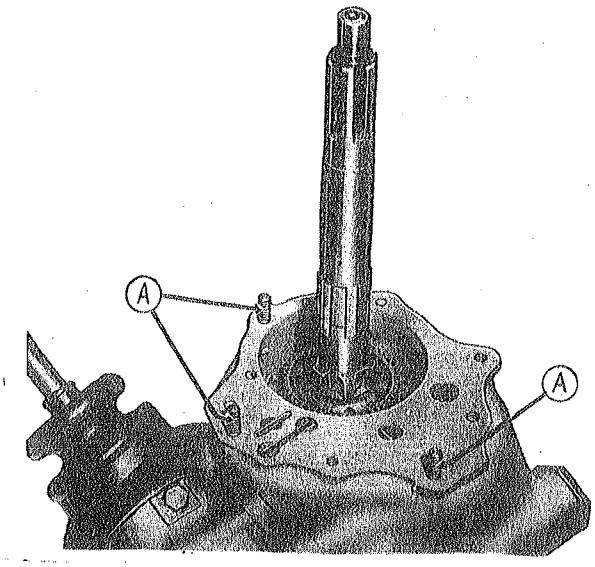

STR 1188

Fig. 21. Gearbox showing studs for adaptor plate

5. Using a suitable length of tubing which fits over the shaft to press against the inner race of the ball bearing, drive the bearing and adaptor plate

FITTING THE OVERDRIVE TO THE GEARBOX—*continued*

on to the protruding mainshaft. As soon as the three studs in the rear face of the gearbox are through the holes in the adaptor plate, the spring washers and nuts A should be fitted, because they will not go over the end of the studs when the adaptor plate is right on.

Next fit the five setscrews E and lockwashers, and tighten the setscrews and studs by diagonally opposite selection. The distance piece C is now fitted and locked in place with the circlip D, together with shim washers B if required, to prevent end float between the bearing and the distance piece (Fig. 22).

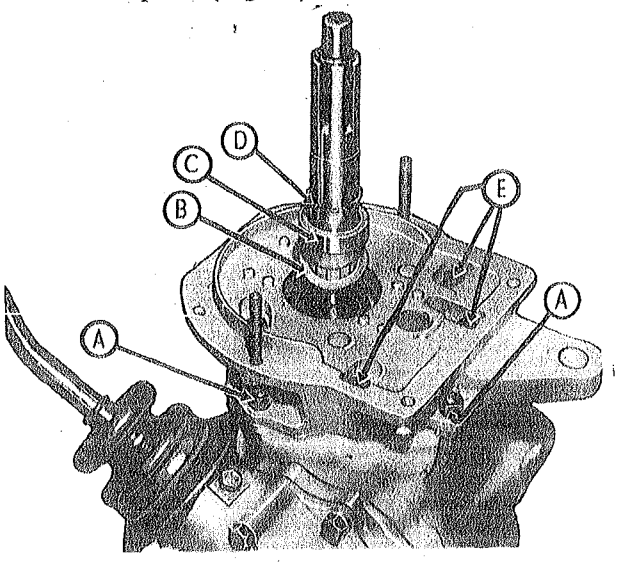

STR 1189

Fig. 22. Gearbox with adaptor plate fitted

6. Grip the mounting flange of the overdrive unit in a vice, so that the unit is upright, and insert a dummy shaft A or a spare mainshaft if the dummy shaft is not available, so that the sun wheel and thrust washers, planet carrier and roller clutch line up with each other; a long thin screwdriver should be used to line by eye the splines in the planet carrier and the roller clutch before inserting the dummy shaft. Gently turn the coupling flange to and fro while holding the dummy shaft, to assist in feeling the shaft into the splines of the planet carrier and roller clutch. Make sure that the dummy shaft has gone right in by holding the coupling flange in one hand and turning the shaft to and fro to feel the free-wheel action of the roller clutch (Fig. 23).

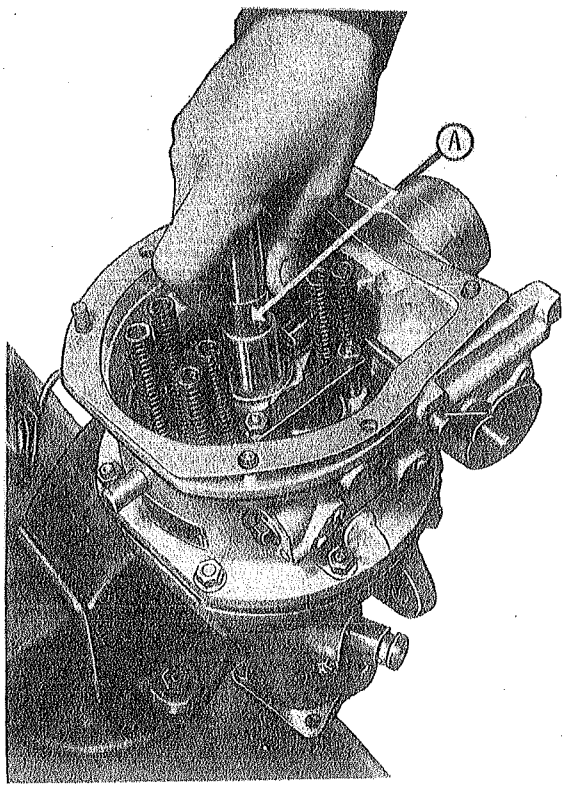

STR 1190

Fig. 23. Centralizing the gears

7. Make quite sure that the clutch springs are in their correct positions—the $4\frac{1}{4}$" (10.8 cm.) long springs D are the inner ones, and the $4\frac{1}{2}$" (11.5 cm.) ones E are the outer (Fig. 24). This is most important because if any of the springs are in the wrong position they will become "coil bound" when the adaptor plate is in place and restrict the movement of the sliding clutch so that overdrive will not engage. The springs can be clearly seen in their correct positions in figures 24 and 25.

8. Place the oil pump operating cam A in position on top of the centre bushing as shown, with the lowest part of the cam in contact with the oil pump plunger B, and also place the paper joint washer C in position (Fig. 24).

9. The gearbox, with top gear engaged should now be lifted by hand on to the overdrive unit, carefully threading the mainshaft through the oil pump cam and into the centre bushing in the body of the overdrive unit. Gently turn the first motion shaft to and fro to assist in "feeling" the main-

FITTING THE OVERDRIVE TO THE GEARBOX—*continued*

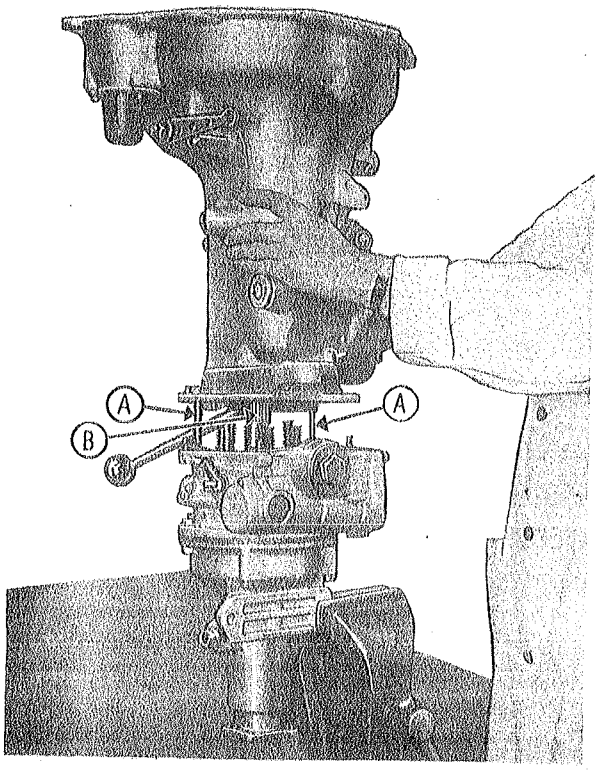

STR 1191

Fig. 24. Overdrive ready to receive the gearbox

shaft into the splines of the planet carrier. When the mainshaft is sufficiently entered for the gearbox to come to rest against the clutch springs with the two long studs A just protruding through the holes in the overdrive body, put the spring washers and nuts on to the end of the studs. Before commencing to tighten the nuts, use a long thin screwdriver to guide the ends of the clutch springs on to the short locating pegs B (Fig. 22) which are cast into the face of the adaptor plate—this is very important because if the springs are not properly located they may become "coil bound" and prevent overdrive engaging. Now commence simultaneously to tighten the nuts on the two long studs, compressing the clutch springs and drawing the gearbox and overdrive together evenly. As the gearbox and overdrive come together watch carefully to see the splines B on the mainshaft enter the oil pump operating cam and that the cam remains properly engaged with the oil pump plunger. If the two units do not pull together easily with only the resistance of the clutch springs being felt as the two nuts are tightened, stop tightening immediately. Gently rotate the gearbox first motion shaft in a clockwise direction whilst holding the overdrive coupling flange stationary until the mainshaft is felt to enter the roller clutch. The tightening of the nuts on the

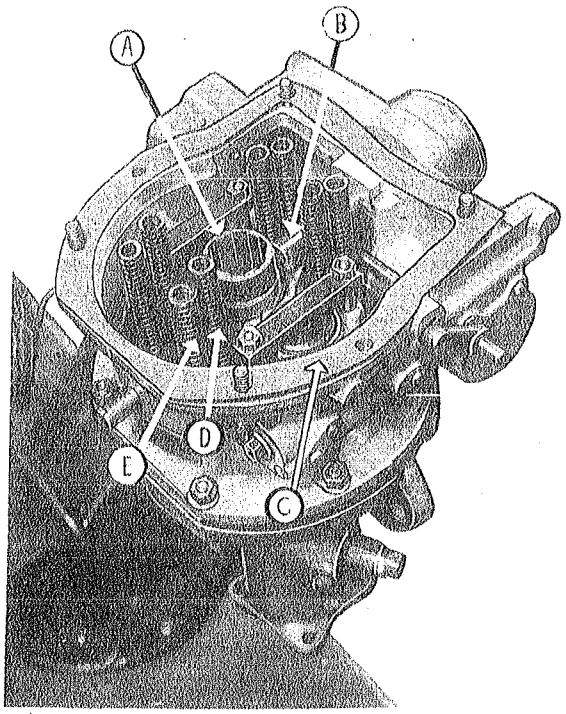

STR 1192

Fig. 25. Lifting on the gearbox

two long studs can then be completed, and the nuts fitted and tightened on to the four short studs (Fig. 25). NOTE: The gearbox mainshaft should enter the overdrive easily provided that the lining up procedure described in paragraph 6 is carried out and the unit is not disturbed. If any difficulty is experienced it is probable that one of the components has become misaligned, and the gearbox should be removed and the overdrive re-aligned with the dummy shaft.

STRIPPING AND REBUILDING THE OVERDRIVE

(See exploded views on pages 24 and 25)

Operations 1 and 2 can be carried out without completely stripping the unit; they have been included in this section for convenience.

1. Removing and Refitting the Oil Pump

Remove the solenoid bracket as previously described and lift out the accumulator spring and tube to give access to the oil pump non-return valve. Remove oil pump non-return valve plug, spring, plunger and ball F. Remove oil drain plug D and the oil strainer B which is held in place with the long bolt C. Now take out the special screwed plug E and the two oil pump body screws G. The short screwed end A of the extractor bolt can now be screwed into the oil pump body in place of the special screwed plug (Fig. 26).

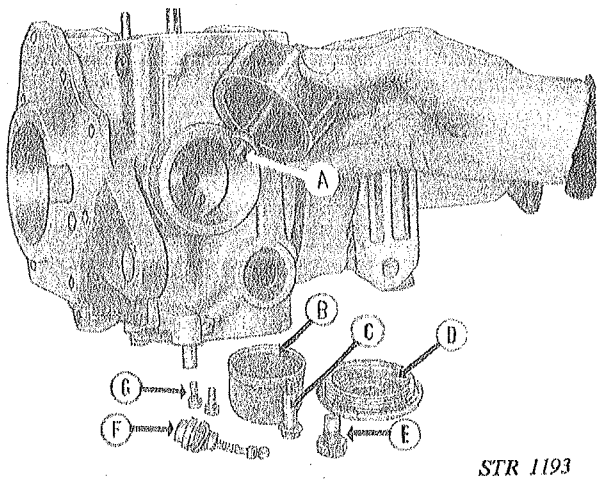

STR 1193

Fig. 26. Inserting the oil pump extractor

Use a suitable spanner to turn the nut A on the long screwed end of the extractor bolt, drawing out the pump body (Fig. 27).

To replace the oil pump body which is an interference fit in the casing, use two number 10 U.N.F. studs about 3" (7.5 cm.) long A as guides and drive the pump body B home with a suitable brass drift (Fig. 28).

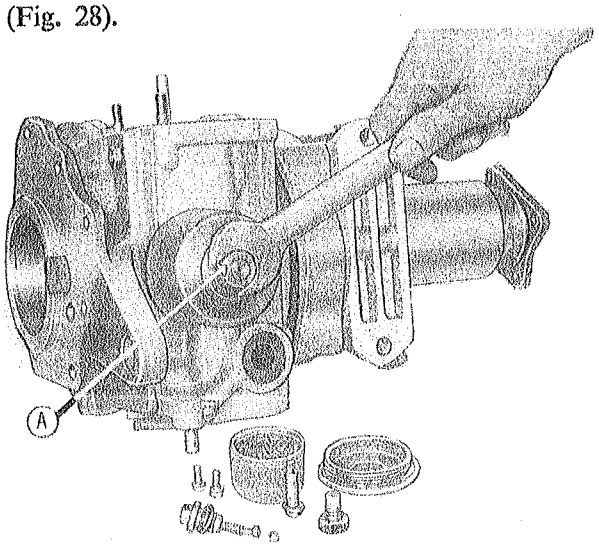

STR 1194

Fig. 27. Extracting the oil pump

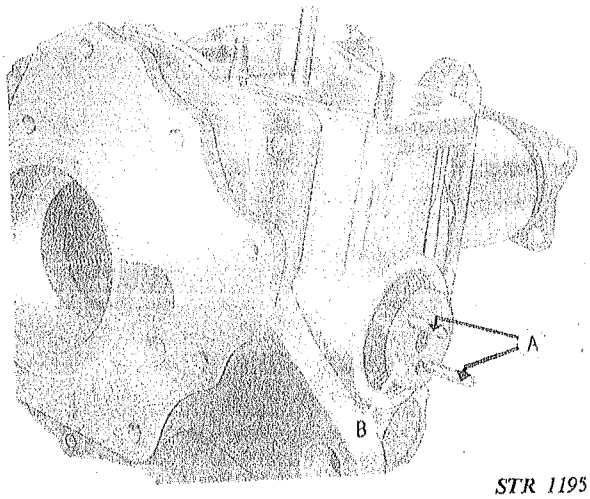

STR 1195

Fig. 28. Putting back oil pump

2. Removing and refitting the operating piston and its housing

Remove the solenoid bracket as previously described, and lift out the accumulator spring and

STRIPPING AND REBUILDING THE OVERDRIVE—*continued*

spring tube. The accumulator piston housing B is a push fit into the unit casing, and the oil tightness of the housing is ensured by the two rubber "O" rings A.

The housing can be extracted easily together with the piston by the use of the special tool D which fits into the bore of the housing and has a rubber "O" ring C which can be expanded by turning the tommy bar E (Fig. 29).

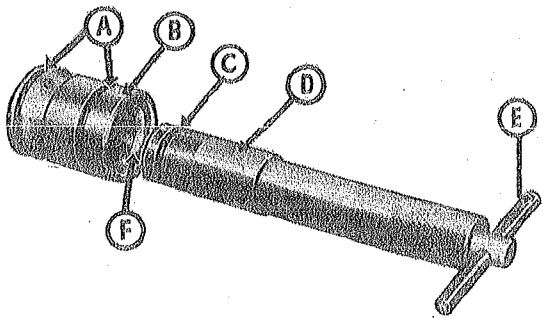

STR 1196

Fig. 29. Piston housing and extractor

To use the extractor, first remove the operating valve plug to admit air to the rear of the housing, insert the nose of the extractor as far as it will go into the bore of the housing, tighten the tommy bar and pull (Fig. 30).

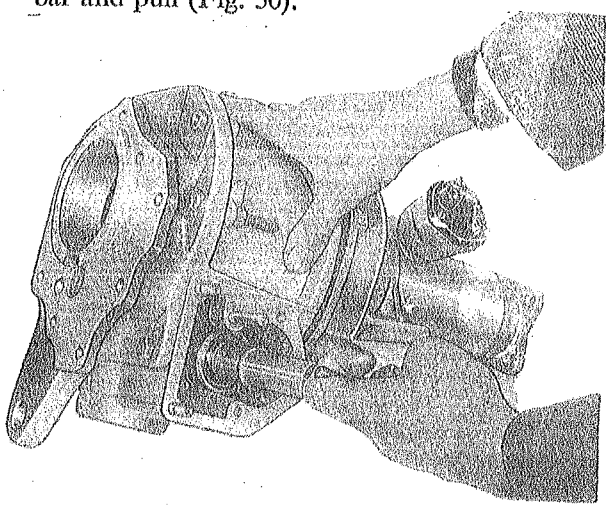

STR 1197

Fig. 30. Extracting the piston housing

Examine the bore of the housing for signs of wear such as a ridge or scoring. This examination should be carried out without removing the piston from the housing.

The accumulator piston is fitted into the housing at the works with a special venturi tube, which ensures that the piston rings do not scrape the surface as they enter the aluminium housing. Replacement pistons are supplied ready assembled in the housing. The piston should not be taken from the housing, but should this happen inadvertently do not put the piston back by pushing it into the rear end of the housing which has a conical recess F (Fig. 29), as this may result in the piston rings scraping the aluminium as they enter the housing. Instead put the piston back from the front end of the housing, using a small piston ring clamp to compress the rings as the piston enters.

Push the new piston and housing together into the casing by hand, using the accumulator spring tube 35 (Fig. 43) to push with. This will ensure that the piston does not blow out backwards as the housing goes in.

3. Dismantling the body and gears

Remove the front cover plate, the clutch thrust springs and the two operating piston bridge pieces. Next remove the nuts from the six studs which hold the rear casing to the main casing and the two casings can then be pulled apart (Fig. 31).

The sliding cone clutch sun wheel, planet carrier and roller clutch can now be lifted out in that order. To remove the annulus from the rear casing, grip the coupling flange in a vice and remove the large slotted nut from the end, also remove the speedometer pinion assembly. The annulus, which can now be drifted out easily from the rear will take the front ball bearing with it and leave the rear ball bearing in the casing.

STRIPPING AND REBUILDING THE OVERDRIVE—*continued*

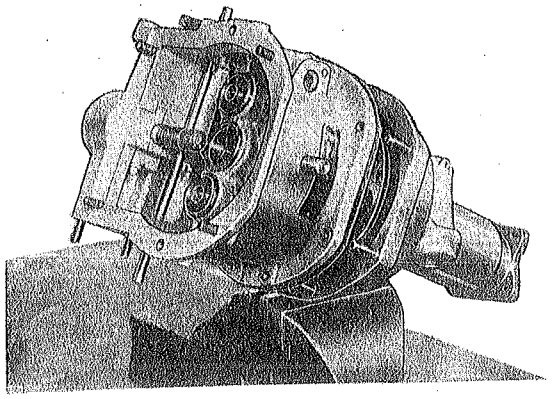

STR 1198

Fig. 31. Separating the casings

4. Inspection

After the unit is dismantled and cleaned, each part should be thoroughly inspected to decide which parts should be replaced.

(*a*) *Front Casing.* Examine for cracks or damage, oil leaks from the plugged ends of the oil passages or from the welch plug beneath the accumulator bore. Examine the bronze support bushes in the centre bore in which the mainshaft should be a close running fit. These bushes cannot be replaced in service since they have to be bored concentric to the casing after fitting. See that the cylinders which are bored in the casing for the operating pistons are free from scratches or scoring, and that the operating pistons and rings are not damaged.

(*b*) *The Gear Train.* Inspect the teeth of the gear train for damage. Examine the bronze bush in the sun wheel which should be a close running fit on the mainshaft, and examine the planet wheels which should be a close running fit on the planet pinions. If the sun wheel or planet bushes are worn they cannot be replaced in service because they have to be bored true to the pitch line of the gear teeth. The gear train comprising sun wheel, planet carrier with planets and annulus is only supplied for service as a matched assembly to ensure quiet running, and care should be taken when dismantling units to keep gear trains in sets.

(*c*) *The Mainshaft.* Inspect splines for wear or burrs, examine for signs of wear where the shaft runs in the bushes and sun wheel. See also that the oil holes are open and clean.

(*d*) *Cone Clutch Sliding Member Assembly.* Examine the clutch linings for burning, wear or embedded foreign matter. The linings cannot be renewed in service because they have to be ground accurately after riveting to the cone clutch member, which must be replaced if necessary. See also that the cone clutch slides freely on the splines of the sun wheel extension. Make sure that the pins for the clutch springs and bridge pieces are riveted tightly into the clutch thrust ring, and that the thrust ring ball bearing is in good condition.

(*e*) *Clutch Springs.* Examine for distortion or collapse. Free length should be 4½″ (11.5 cm.) outer springs, 4¼″ (10.8 cm.) inner springs. Replacement springs are supplied only in sets.

(*f*) *Roller Clutch.* See that the rollers are not chipped or damaged and that the inner and outer members of the roller clutch are not damaged. The outer member of the roller clutch cannot be replaced in service because it has to be ground concentric to the annulus after being fitted. See that the spring is not distorted or broken. Replacement rollers are supplied only in sets.

(*g*) *Ball Bearings.* See that the ball bearings for the annulus are in good condition, and free from roughness when rotated slowly.

(*h*) *Thrust Washers.* Inspect for scoring of the steel or bronze.

(*i*) *Oil Pump.* Examine the pump for signs of wear. The pump plunger should be a close sliding hydraulic fit in the pump body, and the plunger

STRIPPING AND REBUILDING THE OVERDRIVE—*continued*

roller should rotate freely on the roller pin with no slackness. Examine that the pump valve seat and ball are free from nicks and scratches.

(*j*) *Operating Valve.* See that the ball seating is free from nicks and scratches and the restrictor jet clear. Make sure that the valve slides freely in its bore in the front casing.

5. Re-Assembling the Overdrive Unit

(*a*) First build up the tail case assembly; drive the front ball bearing on to the annulus, and then press the annulus and bearing into the tail casing; put the distance washer 24 (Fig. 4) on to the annulus shaft and press home the rear bearing 25 (Fig. 4). These distance washers are supplied in various thicknesses to suit the assembly. First of all try the same distance washer which was taken off when dismantling, even if a new annulus has been fitted the original distance washer will probably be suitable. Drive on the coupling flange and tighten the slotted nut. The end float of the annulus must now be measured, using either a dial indicator or by inserting feeler gauges between the annulus and a straight edge placed across the front face of the tail casing. The end float must be .005″ to .010″ (.127 to .254 mm.). It is very important that no preload should develop on the annulus bearings when the unit warms up in use. If the end float falls outside these limits, the nut and flange must be removed, the annulus driven out and a different spacing washer selected. When the end float is correct, remove the nut and flange and press home the oil seal (Fig. 4) which is .006″ (26 mm.) interference fit. The lip of the oil seal should face inwards.

(*b*) Next prepare the main casing assembly in the following order:—

Assemble the oil pump with valve, etc., the accumulator housing with piston, accumulator spring, tube and solenoid bracket, as already described. Next fit the two operating pistons, using a small piston ring clamp to assist assembly. The operating valve ball, plunger, spring and plug should now be fitted.

Finally drive home the cast-iron brake ring using a hard rubber hammer (Fig. 32). The brake ring is spigoted to the main casing and is a light interference fit; jointing composition should not be used.

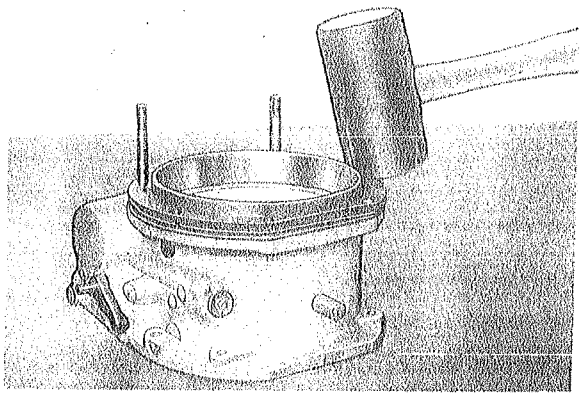

STR 1199

Fig. 32. Driving home the brake ring

(*c*) Assemble the sliding clutch member. Press the ball bearing B into the housing in the thrust ring A and secure with the external circlip D. The thrust ring and bearing is then pressed on to the cone clutch member C and secured with the internal circlip E using suitable circlip pliers (Fig. 33).

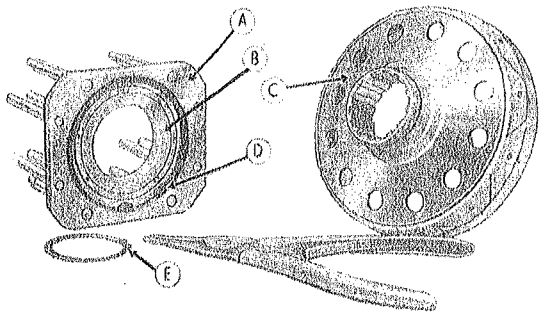

STR 1200

Fig. 33. Assembling the sliding member

STRIPPING AND REBUILDING THE OVERDRIVE—*continued*

(*d*) Assemble the roller clutch. This is quite easily done with the special assembly ring (Fig. 34). The roller clutch inner member A, cage B and spring are put together making sure that the spring is in the right way so as to cause the cage to urge the rollers up the inclined faces of the inner member

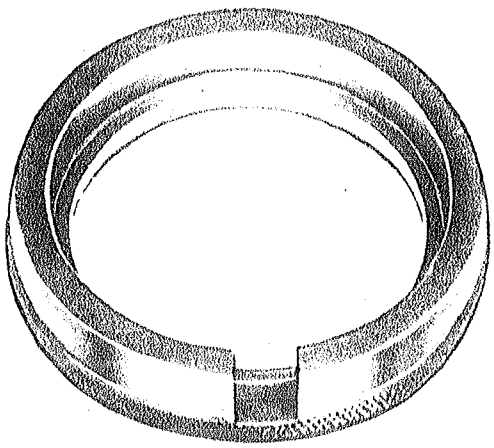

STR 1201

Fig. 34. Roller clutch assembly ring

The inner member with cage and spring is then placed into the assembly ring and the rollers C are pushed in through the slot in the rim of the ring (Fig. 35).

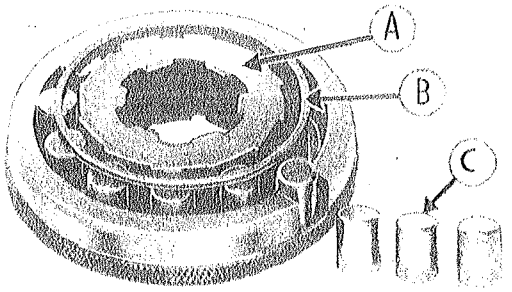

STR 1202

Fig. 35. Assembly of roller clutch

The roller clutch can then be transferred direct from the assembly ring to the annulus, remembering to put the bronze thrust washer A (Fig. 36) into position first (Figs. 36 and 37).

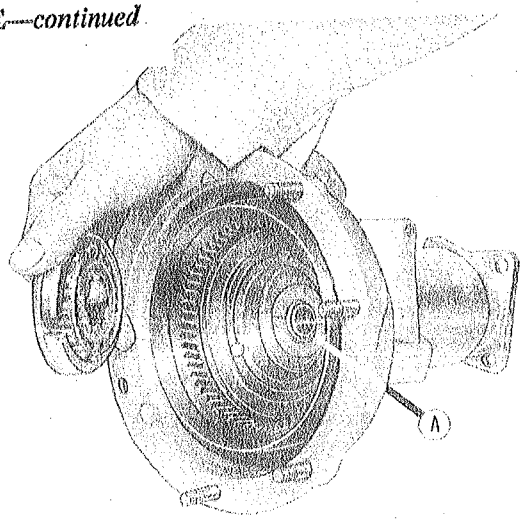

STR 1203

Fig. 36. Transferring roller clutch to annulus

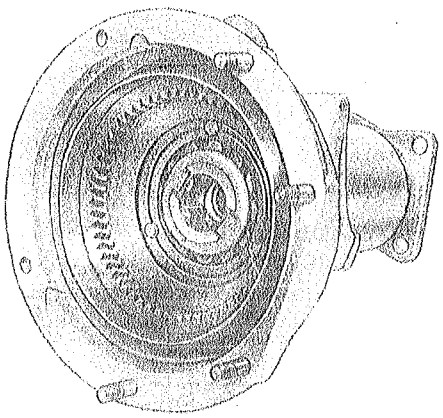

STR 1204

Fig. 37. Tail casing with roller clutch assembled

Assembly of gear train. Erect the tail case assembly by securely gripping the mounting flange in a vice. Place the three thrust washers 3, 4 and 5 (Fig. 44) for the rear of the sun wheel into position inside the planet carrier, with the steel thrust washer between the two bronze ones. One tooth on each planet wheel is punch-marked, and the planet wheels must be turned in the carrier so that the punch marks are radially outward as shown in Fig. 38. The sun wheel should now be inserted into the planet carrier, and with the punch marks

VOLUME 24—CARS
Issue 1
Published January 18 1954

STRIPPING AND REBUILDING THE OVERDRIVE—*continued*

still outward, the planet carrier should be placed into the annulus. The dummy shaft (Fig. 39) should now be inserted and left in place until rebuilding is completed (Fig. 40).

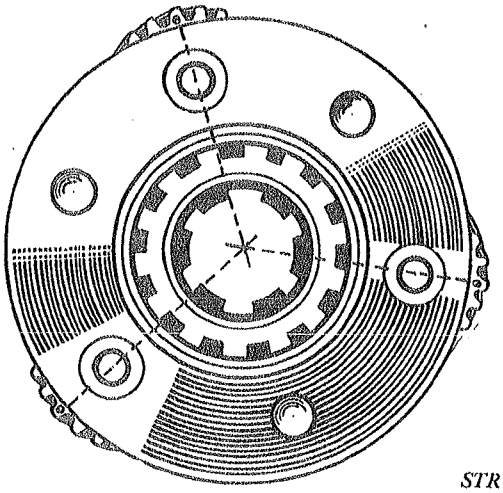

STR 1220

Fig. 38. Positioning the marked teeth on the planet wheels

NOTE: There are no marked teeth on the planet wheels of the 32% ratio units, as fitted to early cars. The relative position of the planet wheels on 32% ratio units is unimportant. The planet wheels of the 28% ratio units are of compound design, and it is imperative that the marked teeth should be arranged as described.

The next thing is to select a suitable adjustment washer to allow the correct amount of end float

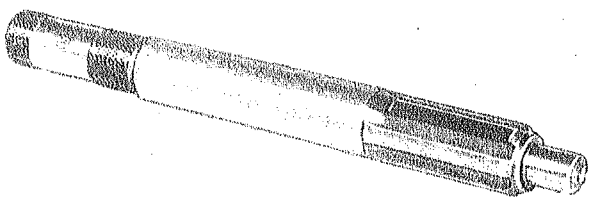

STR 1205

Fig. 39. Dummy mainshaft

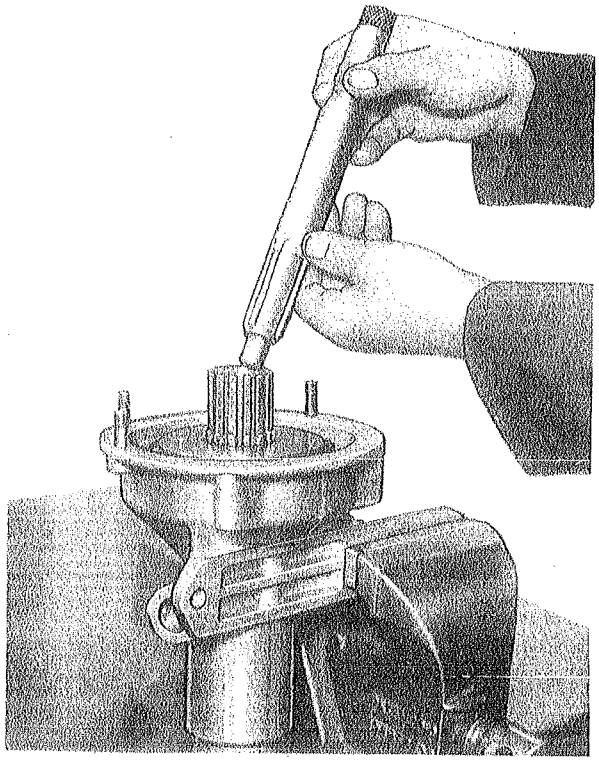

STR 1206

Fig. 40. Inserting the dummy mainshaft

to the sun wheel. The steel thrust washer B (Fig. 41) which is fitted between the bronze thrust washer C (Fig. 41) and the central bush 4 (Fig. 4) in the main casing, serves also to make this adjustment and is supplied in various thicknesses to suit the assembly. Gauging the end float of the sun wheel can be done easily with ordinary feeler gauges as follows:—

Place the bronze washer C (Fig. 41) and the steel washer B (Fig. 41) in position at the front of the sun wheel. The cone clutch A (Fig. 41) should be left out while the thrust washer is being selected. Put an extra steel adjustment washer of known thickness on top of washer B, and offer up the main casing assembly to the tail casing assembly. It will not go right down because of the extra washer, and the gap left between the

STRIPPING AND REBUILDING THE OVERDRIVE—*continued*

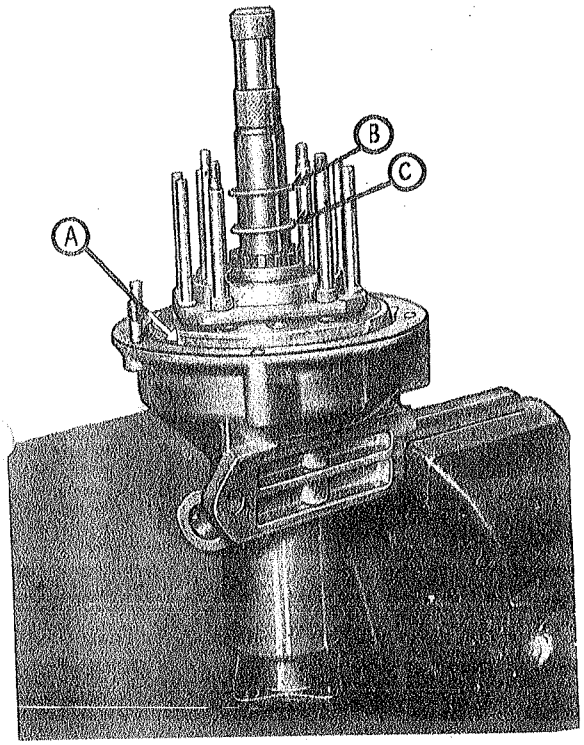

STR 1207

Fig. 41. Ready for final assembly

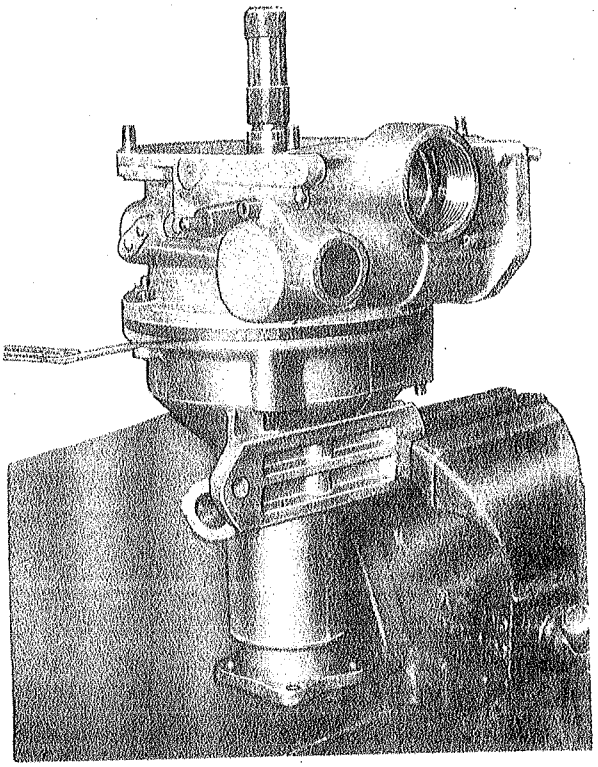

STR 1208

Fig. 42. Gauging the sun wheel end float

two casings should be measured with feeler gauges (Fig. 42).

The width of the gap will be equal to the thickness of the extra washer less the amount of sun wheel end float, for example if the extra washer used is part number 7H 5872G which is .078″ (1.981 mm.) thick, and the measured gap between the casings is .062″ (1.575 mm.) then the end float of sun wheel with the particular thrust washer used will be:—.078″ minus .062″ = .016″ (1.981 mm. minus 1.575 mm. = .406 mm.). The end float of the sun wheel must be between .014″ and .020″ (.355 mm. and .508 mm.). It is advisable when reassembling a unit to first of all try the original thrust washer taken from the unit. If the end float is found to be too much or too little, a suitable washer can readily be selected by calculation.

As soon as the end float of the sun wheel is correct, reassembly can quickly be completed. Separate the two casings, remove the extra thrust washer, put the cone clutch assembly A (Fig. 41) in place, offer up the main casing to the tail casing, put the nuts and spring washers on to the studs and tighten up evenly. The bridge pieces for the operating pistons should now be fixed in place, and the clutch thrust springs placed in position on the pegs. The dummy shaft should now be withdrawn and the unit is ready for fixing to the gearbox. If not required for immediate fixing to a gearbox the adaptor plate should be fitted before putting the unit into store.

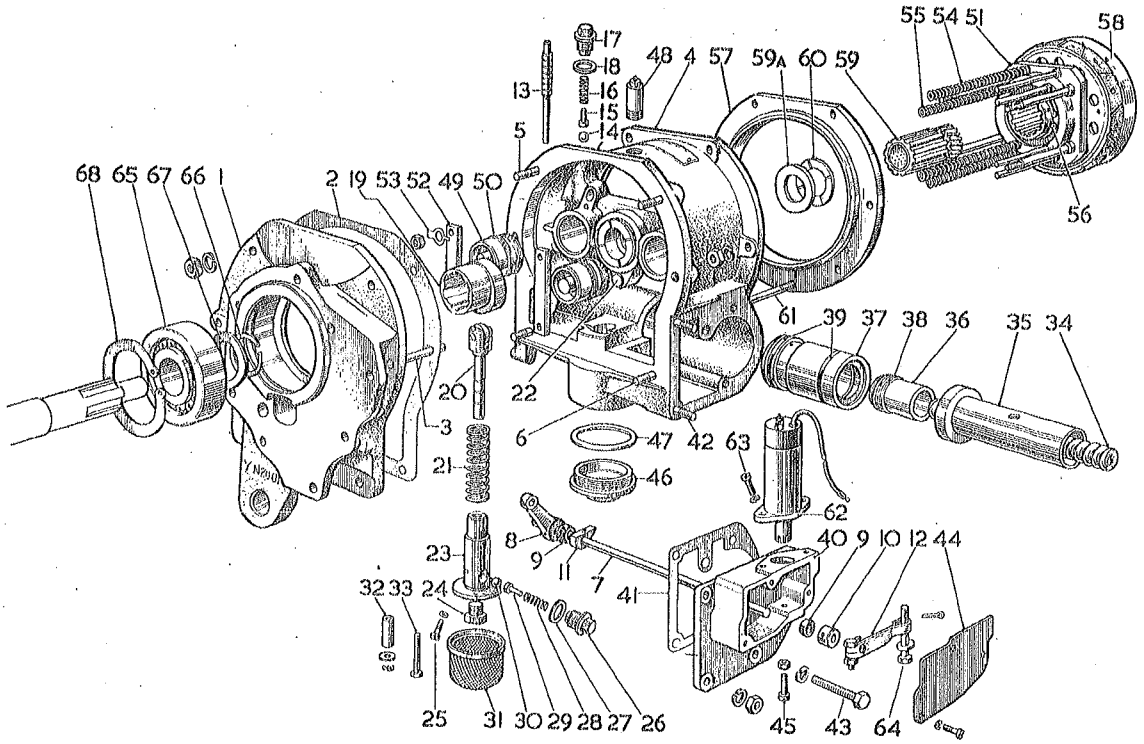

Fig. 43. The overdrive body in exploded form *STR 1209*

1. Adaptor plate to gearbox.
2. Joint washer.
3. Studs, adaptor plate to body.
4. Front casing.
5. Stud for adaptor plate.
6. Stud for adaptor plate.
7. Valve operating shaft.
8. Setting lever for shaft.
9. Oil seals for shaft.
10. Collar for shaft.
11. Cam lever.
12. Solenoid lever.
13. Operating valve.
14. Steel ball for valve.
15. Plunger for ball.
16. Spring for plunger.
17. Screwed plug for valve.
18. Copper washer for plug.
19. Oil pump operating cam.
20. Oil pump plunger assembly.
21. Spring for plunger.
22. Guide peg, in casing, for plunger.
23. Oil pump body.
24. Screwed plug for pump body.
25. Setscrews, pump to casing.
26. Plug for valve on oil pump.
27. Copper washer for plug.
28. Spring for plunger.
29. Plunger for ball.
30. Steel ball.
31. Oil strainer.
32. Distance tube for strainer.
33. Bolt for strainer.
34. Accumulator spring.
35. Accumulator spring tube.
36. Accumulator piston.
37. Housing piston.
38. Piston ring.
39. Rubber "O" ring.
40. Solenoid bracket.
41. Joint washer.
42. Stud for bracket.
43. Setscrew for bracket.
44. Cover plate.
45. Adjusting screw.
46. Oil drain plug.
47. Fibre washer.
48. Breather.
49. Operating pistons.
50. Piston rings.
51. Clutch thrust ring.
52. Bridge piece.
53. Tab washer.
54. Clutch spring, outer.
55. Clutch spring, inner.
56. Circlip, internal.
57. Clutch brake ring.
58. Clutch sliding member.
59. Sun wheel.
59a. Adjustment washer, steel.
60. Thrust washer, phosphor bronze.
61. Stud for rear casing.
62. Operating solenoid.
63. Setscrews to bracket.
64. Plunger screw.
65. Ball bearing for mainshaft.
66. Circlip for shaft.
67. Distance piece.
68. Circlip for adaptor plate.

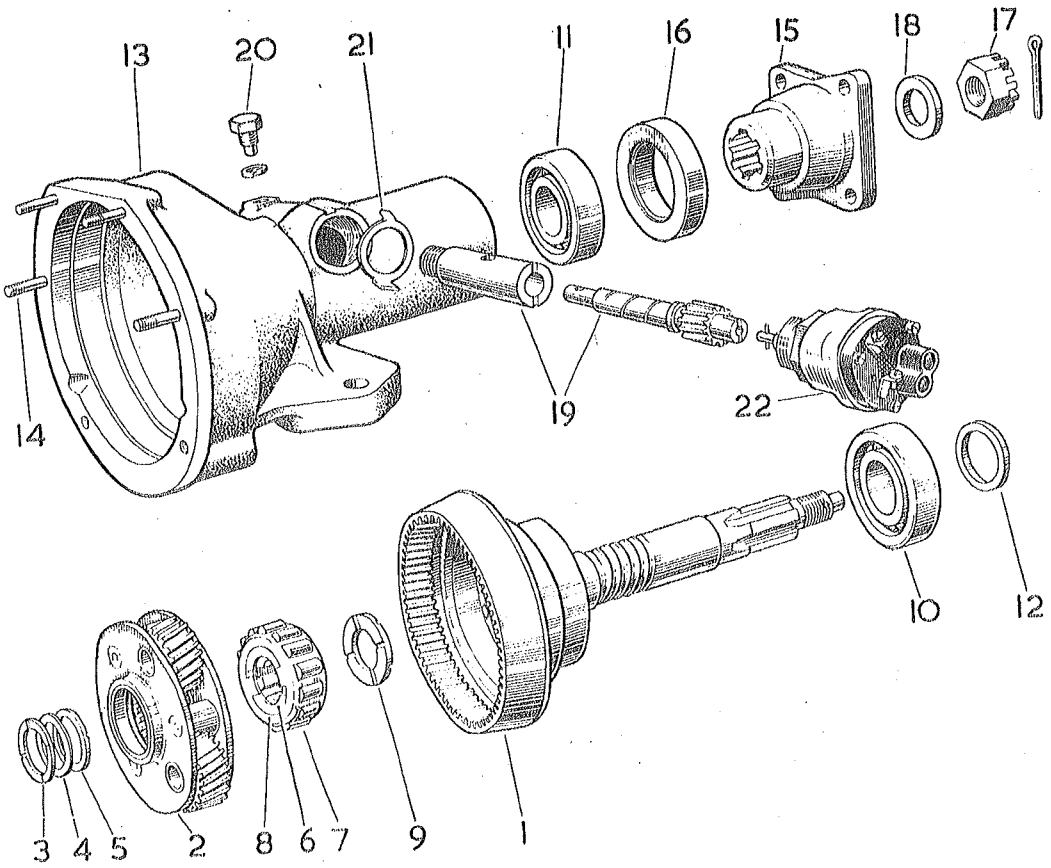

Fig. 44. The overdrive rear casing in exploded form *STR 1210*

1. Annulus assembly.
2. Planet carrier with planets.
3. Thrust washer, phosphor bronze.
4. Thrust washer, steel.
5. Thrust washer, phosphor bronze.
6. Roller clutch, inner member.
7. Steel roller.
8. Cage for roller.
9. Thrust washer, phosphor bronze.
10. Ball bearing.
11. Ball bearing.
12. Adjustment washer.
13. Rear casing.
14. Stud for body.
15. Coupling flange.
16. Oil seal.
17. Slotted nut.
18. Washer.
19. Speedometer pinion.
20. Locking screw.
21. Lockwasher.
22. Centrifugal switch.

FIRST MOTION SHAFT AND CLUTCH PLATE

16-H.P. Taxi and Hire-Car

In the interests of standardization of parts, a clutch plate having a larger splined hub diameter is now being fitted. At the same time, to prolong the life of the first motion shaft bearing, the size of the bearing has been increased.

Full details of the modification are as follows:—

1. The inside diameter of the splined hub of the clutch plate has been increased from .910″/.918″ to 1.012″/1.020″.
2. The new first motion shaft has splines to suit the larger inside diameter of the clutch plate hub; the width of the splines having been increased from .171″/.173″ to .190″/.192″.
3. The journal of the first motion shaft has been increased in diameter to accommodate a larger ball bearing (with a spring ring), 40 × 90 × 23 mm., which replaces the old ball journal bearing, $1\frac{1}{2}'' \times 3\frac{1}{4}'' \times \frac{3}{4}''$ (38.099 × 82.548 × 19.050 mm.).
4. A thinner nut, $\frac{1}{4}''$ (6.350 mm.) instead of $\frac{9}{32}''$ (7.144 mm.), is utilized to secure the new bearing on the shaft.
5. The bush, in the first motion shaft, for the third motion shaft has been reduced in length from $1\frac{7}{16}''$ (36.512 mm.) to $1\frac{13}{32}''$ (35.718 mm.).
6. A new housing for the new first motion shaft bearing has been introduced necessitating a new gearbox case and new front cover.
7. A modified clutch withdrawal bearing is also required to suit the new front cover.

INTERCHANGEABILITY

The new parts are not separately interchangeable. The new gearbox assembly can be used to replace the old one providing the new clutch withdrawal bearing and clutch plate are also used.

SUMMARY OF ALTERATION

Description	Number Off	Old Part	New Part	Type and Parts List Publication Number
Gearbox Assembly with gears, change speed lever, clutch operating shaft and bearing	1	B3–292	B3–627	16-H.P. Taxi Pub. 558A, p. 20
Gearbox Casing with studs, bushes for clutch operating shaft, grease nipple and drain plug	1	B3–150	B3–630	

COMMENCING CHASSIS NUMBERS:—

16-H.P. Taxi – – – 151283
Hire-Car, R.H. Steering – 153579

FOR YOUR RECORDS	PARTS LISTS
	STOCK CARDS
	PARTS ORDERED
	ALTERATIONS NOTED

Continued

FIRST MOTION SHAFT AND CLUTCH PLATE—*continued*

SUMMARY OF ALTERATION—*continued*

Description	Number Off	Old Part	New Part	Type and Parts List Publication Number
Gearbox Assembly with gears, change speed lever, clutch operating shaft and bearing R.H. Steering	1	B3–279	B3–628	16-H.P. Hire-Car Pub. 728, p. 20
Gearbox Assembly with gears, change speed lever, clutch operating shaft and bearing L.H. Steering	1	B3–280	B3–629	
Gearbox Casing with studs, bushes, clutch operating shaft, grease nipple and drain plug	1	B3–150	B3–630	
Front Cover	1	1F 3429	1F 3514	16-H.P. Taxi Pub. 558A, p. 20 16-H.P. Hire-Car Pub. 728, pp. 21/22
Joint Washer	1	1F 3352	1F 3513	
Shims for 1st motion shaft bearing, .002″ thick	As req'd	2K 7184	6K 778	
Shims for 1st motion shaft bearing, .004″ thick	As req'd	2K 7734	6K 779	
1st Motion Shaft with cone and adaptor	1	1F 3468	1F 3508	16-H.P. Taxi Pub. 558A, p. 22 16-H.P. Hire-Car Pub. 728, p. 22
Nut for 1st motion shaft	1	1E 3223	1F 3512	
Ball Journal Bearing for 1st motion shaft, $1\frac{1}{2}'' \times 3\frac{1}{4}'' \times \frac{3}{4}''$, 3-dot	1	6K 386	—	
Ball Bearing with spring ring, for 1st motion shaft, 40 × 90 × 23 mm., 2-dot	1	—	6K 830	
Spring Ring for bearing	1	—	6K 780	
Housing for bearing	1	1F 3177	1F 3511	
Bush for 3rd motion shaft	1	1K 3258	1F 3510	
Clutch Withdrawal Bearing assembled with collar, oil thrower, bearing, felt washer and retainer	1	B3–149	B3–631	16-H.P. Taxi Pub. 558A, p. 18 16-H.P. Hire-Car Pub. 728, p. 18
Clutch Withdrawal Housing with thrust buttons	1	1F 3483	1F 3515	
Clutch Assembly with clutch plate and linings	1	*3H 2169	—	16-H.P. Taxi Pub. 558A, p. 19 16-H.P. Hire-Car Pub. 728, p. 19
Clutch Plate with linings	1	7H 3173	7H 3189	

*No longer serviced. Order clutch cover and clutch plate separately.

OVERDRIVE UNIT—ANNULUS COUPLING FLANGE OIL SEAL

(REMOVING AND REPLACING)

Austin-Healey 100

The oil seal fitted to the rear end of the overdrive unit can be removed and replaced without removing the gearbox and overdrive unit from the chassis (Figs. 1 and 2).

The following procedure should be adopted:—

1. Turn off the master switch.
2. Remove tunnelling.
3. Remove the gear lever.
4. Disconnect the propeller shaft at the front end only.
5. Remove the gearbox stabilizing rod.
6. Remove the rear mounting setscrews.
7. Drain the radiator.
8. Disconnect the exhaust pipe from the manifold.
9. Remove the fan blades.
10. Remove the cover and gauge from the front air cleaner.
11. Disconnect both the heater pipes from the engine.
12. Sling the rear end of the overdrive unit and lift it clear of the tunnelling.
13. Remove the split pin and coupling flange nut (hold the flange with tool GT 34).
14. Remove the flange using tool GT 2.
15. Screw tool GT 176 into the oil seal by means of a spanner located on the flats of the tool body. Operate the centre bolt of the tool against the main shaft with either a spanner or tommy bar, again holding the body of the tool by means of a spanner on the two flats. Continue to screw in the centre bolt to withdraw the oil seal.

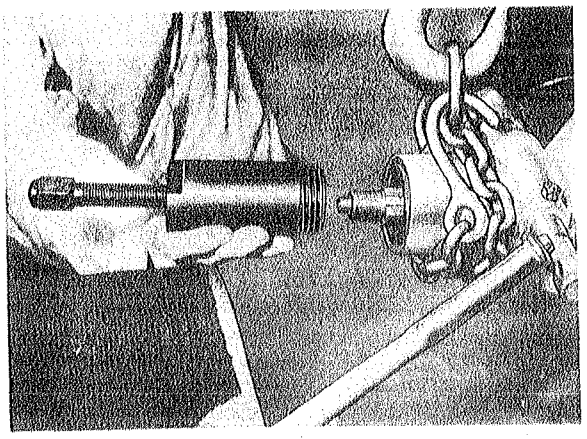

Fig. 1 *STR 1330*

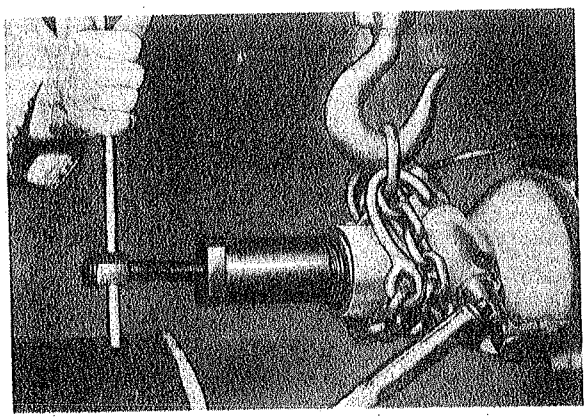

Fig. 2 *STR 1322*

Continued

OVERDRIVE UNIT—ANNULUS COUPLING FLANGE OIL SEAL (REMOVING AND REPLACING)—*continued*

The fitting of a new oil seal is quite an easy matter if GT 177 is used (Figs. 3 and 4). The new seal should be inserted as squarely as possible in the housing with its inner lip towards the gearbox, and then driven in until it is up against the shoulder inside the housing. GT 177 will centralize itself over the shaft and will ensure that the oil seal is correctly fitted. Thus no damage to either oil seal or casing will result.

After fitting the new oil seal refit all items from 1 to 14 in reverse order. Tools GT 176 and GT 177 make the removal and dismantling of the gearbox and overdrive unit completely unnecessary, thus saving time and expense.

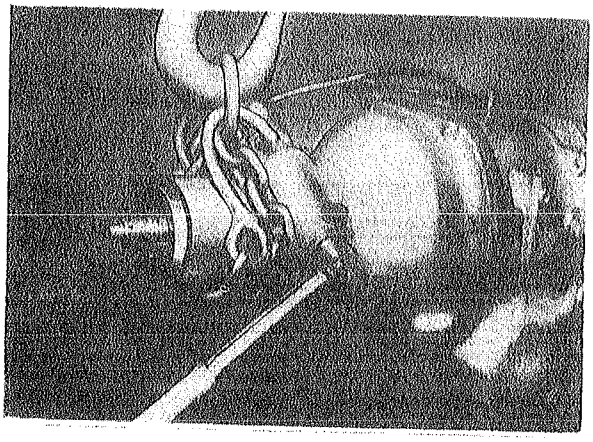

Fig. 3 *STR 1331*

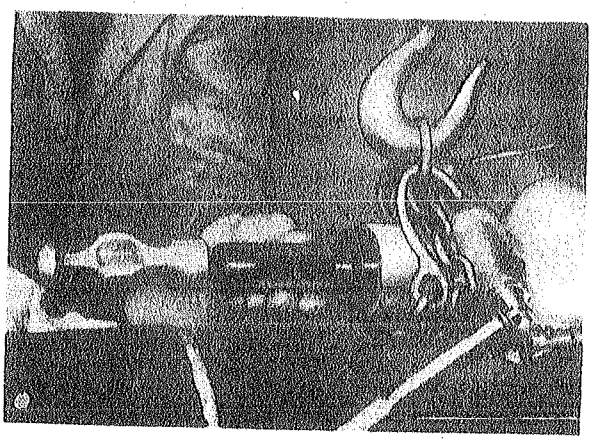

Fig. 4 *STR 1324*

GEARBOX BEARINGS

A 30

To improve the alignment of the 1st and 3rd motion shafts the '3-dot' ball journal bearings have been replaced by similar ones which have '2-dot' diametral clearances.

INTERCHANGEABILITY

The new bearings will be supplied for replacements when stocks of the old ones are exhausted.

SUMMARY OF ALTERATION

Type	Range	Plate	Description	Number per Vehicle	Austin Part Number	Parts List Publication Number
AS.3 AS.4 A2S.4	R.H.S. To C.28470 L.H.S. To C.29852 R.H.S. C.25631–33952 R.H.S. C.25621–33943 L.H.S. C.30715–33965	C.61	Ball journal bearing for 1st motion shaft, 1″ × 2¼″ × ⅝″ 3 dot (use 2A 3245)	1	6K 557	
AS.4 A2S.4	R.H.S. C.33953 on L.H.S. C.33906 on R.H.S. C.33944 on L.H.S. C.33966 on	C.61	Ball journal bearing for 1st motion shaft, 1″ × 2¼″ × ⅝″ 2 dot .	1	2A 3245	Pub. 883B, Gearbox, p. 2
AS.3 AS.4 A2S.4	R.H.S. To C.28470 L.H.S. To C.29852 R.H.S. C.25631–33952 R.H.S. C.25621–33943 L.H.S. C.30715–33965	C.29	Ball journal bearing for 3rd motion shaft, rear end, 1″ × 2¼″ × ⅝″ 3 dot (use 2A 3245) . .	1	6K 557	
AS.4 A2S.4	R.H.S. C.33953 on L.H.S. C.33906 on R.H.S. C.33944 on L.H.S. C.33966 on	C.29	Ball journal bearing for 3rd motion shaft, rear end, 1″ × 2¼″ × ⅝″ 2 dot	1	2A 3245	

FOR YOUR RECORDS	PARTS LISTS
	STOCK CARDS
	PARTS ORDERED
	ALTERATIONS NOTED

Published May 10, 1954

LAYGEAR BEARINGS

A 125, A 135, Taxi and Hire-Car

Slightly modified spring rings for the needle roller bearings have been introduced to facilitate assembly. In future, the needle roller bearings and spring rings will be supplied separately instead of together.

INTERCHANGEABILITY

The new spring rings will be supplied for replacements of the old ones.

SUMMARY OF ALTERATION

Description	Number Off	Old Part	New Part	Type and Parts List Publication Number
Needle Roller Bearings with spring ring	3	2H 4627	—	A 125, Pubs. 430A, p. 27, 779, p. 29. A 135, Pub. 624, p. 27
Needle Roller Bearings	3	—	2H 4868	
Spring Rings	5	2H 4869	—	
Spring Rings	5	—	1D 3784	
Needle Roller Bearings with spring ring	2	3H 1469	—	Hire-Car, Pub. 728, p. 23 Taxi, Pub. 558A, p. 22
Needle Roller Bearings	2	3H 1470	—	
Needle Roller Bearings	4	—	3H 1470	
Spring Rings	4	3H 1471	—	
Spring Rings	6	—	1F 3525	

COMMENCING CHASSIS NUMBERS:—

Taxi, R.H. Steering – –	157961
Hire-Car, R.H. Steering –	157984
L.H. Steering –	157988

FOR YOUR RECORDS	PARTS LISTS
	STOCK CARDS
	PARTS ORDERED
	ALTERATIONS NOTED

Published July 19, 1954

THIRD SPEED MAINSHAFT GEAR

Austin-Healey 100

A modified third speed gear, incorporating larger and stronger gear teeth is now being fitted, also the 1st motion shaft and the laygear have been modified to suit the new third speed gear.

INTERCHANGEABILITY

The new parts together should be used to replace the old ones. They cannot be used separately. A conversion set of parts can be obtained by quoting part number 58G 341.

SUMMARY OF ALTERATION

Type	Range	Plate	Description	Number per Vehicle	Austin Part Number	Parts List Publication Number
Austin-Healey 100	*	B. 41	1st Motion shaft with cone and adaptor (can be replaced by conversion set 58G 341) . .	1	1B 3549	Pub. 1050 Gearbox and Overdrive, pp. 2/3
		B. 60	3rd Speed mainshaft gear with cone and adaptor (can be replaced by conversion set 58G 341)	1	1B 3625	
		B. 66	Laygear with bushes (can be replaced by conversion set 58G 341)	1	1B 3481	
	†		1st Motion shaft with cone and adaptor		1B 3695	
			3rd Speed mainshaft gear with cone and adaptor	1	1B 3697	
			Laygear with bushes . . .	1	1B 3693	

* To Gearbox number 5154 R.H. Steering.
5145 L.H. Steering.

† Gearbox number 5155 on, R.H. Steering.
5146 on, L.H. Steering.

FOR YOUR RECORDS

PARTS LISTS
STOCK CARDS
PARTS ORDERED
ALTERATIONS NOTED

BUSH FOR THIRD SPEED MAINSHAFT GEAR

A 40, A 70, Austin-Healey 100

In the interest of standardization of parts, a new bush for the third speed mainshaft gear is now being used. The new bush differs from the old one in that it has an additional oil hole.

INTERCHANGEABILITY

The new bush will be supplied for replacements when stocks of the old ones are exhausted.

SUMMARY OF ALTERATION

Type	Range	Plate	Description	Number per Vehicle	Austin Part Number	Parts List Publication Number
Austin-Healey 100 A 40 A 70	C.138031–157301 C.365171–864313 C.89001–157908		Bush for 3rd speed mainshaft gear .	1	1B 3490	Pub. 1050, Gearbox, p. 3 Pub. 1099, Gearbox, p. 11 Pubs. 780A, p. 30 853, p. 28
Austin-Healey 100 A 40 A 70	C.157302 on C.864314 on C.157909 on		Bush for 3rd speed mainshaft gear ...	1	11G 3029	

FOR YOUR RECORDS	PARTS LISTS
	STOCK CARDS
	PARTS ORDERED
	ALTERATIONS NOTED

Published September 20, 1954

GEARBOX REMOVAL

A 40 (GS. 5), A 50 (HS. 5)

The removal and refitting of the gearbox can present a problem due to the difficulty in giving adequate support to the gearbox when the first motion shaft is being withdrawn from or inserted into the clutch driven plate. To overcome the possibility of damage to the clutch driven plate and first motion shaft, a pair of special brackets (A) have been designed which, when fitted to the body at the gearbox cross member fixing points (B), support the entire weight of the gearbox (see Fig. 1).

The brackets are so designed, that when in position on the body side members, the runners, or ledges, of the brackets slope downwards at a corresponding angle to that taken by the engine and gearbox.

The ends of the gearbox rear cross member (C) rest on the runners and are free to slide to the entire length of the brackets as the gearbox is drawn clear of the engine and clutch. Conversely, when the gearbox is to be refitted, the ends of the rear cross member are placed on the runners, the first motion shaft lined up with the clutch driven plate, and the gearbox slowly pushed up to its mounting plate at the rear of the engine unit.

D = 7/16" (11.112 mm.) diameter holes.
E = 3/64" (1.1906 mm.) thick.
F = 1" (25.4 mm.) length welding.

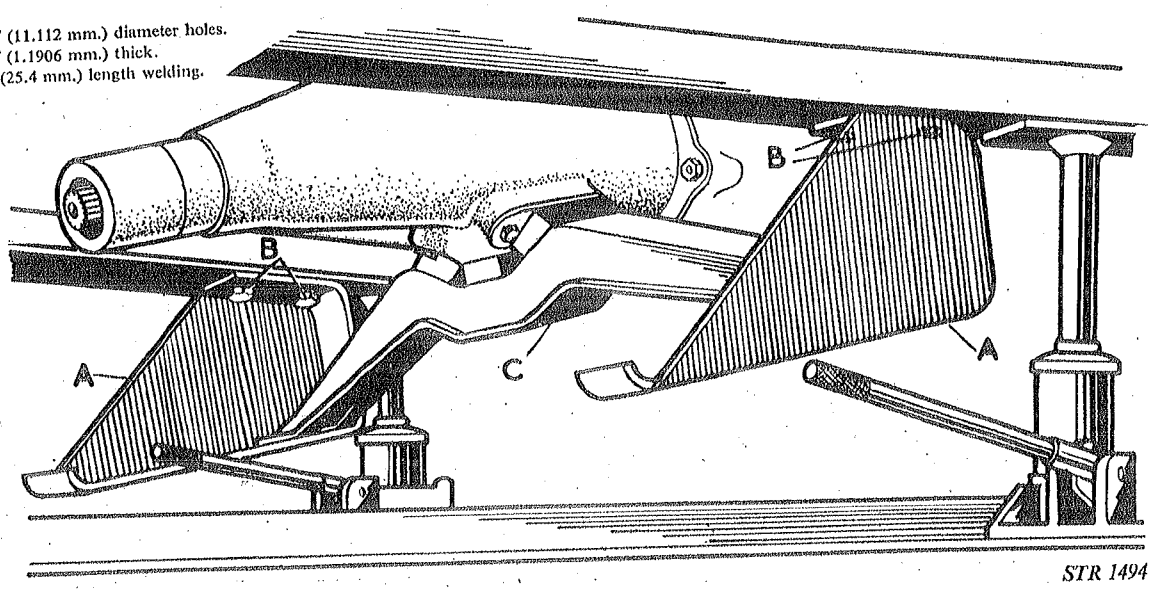

STR 1494

Fig. 1

Sequence of operations for the removal and refitting of a gearbox:—

1. Remove the battery and oil bath air cleaner (if fitted).
2. Disconnect the exhaust down pipe from the manifold, and silencer clips from the clutch housing and the body (behind gearbox).
3. Disconnect the accelerator control rod.
4. Disconnect and remove the gear selector rod and the gear change rod.
5. Remove the change speed control bracket from the engine.
6. Disconnect the speedometer cable at the gearbox end, remove the clutch operating cylinder where attached to the gearbox, and disconnect the handbrake operating rod spring.
7. Drain the gearbox or make provision for blanking off the rear end when the propeller shaft is removed.
8. Remove the propeller shaft.

Continued

FOR YOUR RECORDS	PARTS LISTS
	STOCK CARDS
	PARTS ORDERED
	ALTERATIONS NOTED

GEARBOX REMOVAL—*continued*

9. Fix a sling to take the weight of the engine.
10. Remove the setscrews, 2 at each side, securing the gearbox cross member to the body frame side members.
11. Fit the brackets, using the 4 setscrews used for securing the gearbox cross member.
12. Lower the engine until it comes to rest with the rear of the engine against the bulkhead of the body.
13. Remove the 4 top nuts, 2 each side, from the studs which secure the front suspension cross member to the body frame side members.
14. Hoist or jack up the body until the body frame side members are lifted approximately 1½" (38.1 mm.) clear of the front suspension cross member. DO NOT LIFT TOO HIGH; the long studs securing the suspension cross member MUST remain partly in the body frame side members.
15. Remove the bolts securing the gearbox to the engine.
16. Take out the starter motor.
17. Slide the gearbox to the rear and lift out.

REVERSE the above procedure to refit.

NOTE.—In view of the importance of following this technique, it is imperative that a pair of brackets, to support the gearbox when removing or refitting, is held in stock. They are available at the cost of 10/- per pair nett, and part number 18G 250 should be quoted when ordering. Alternatively, the brackets can be fabricated locally by working to the sketches shown in Fig. 2.

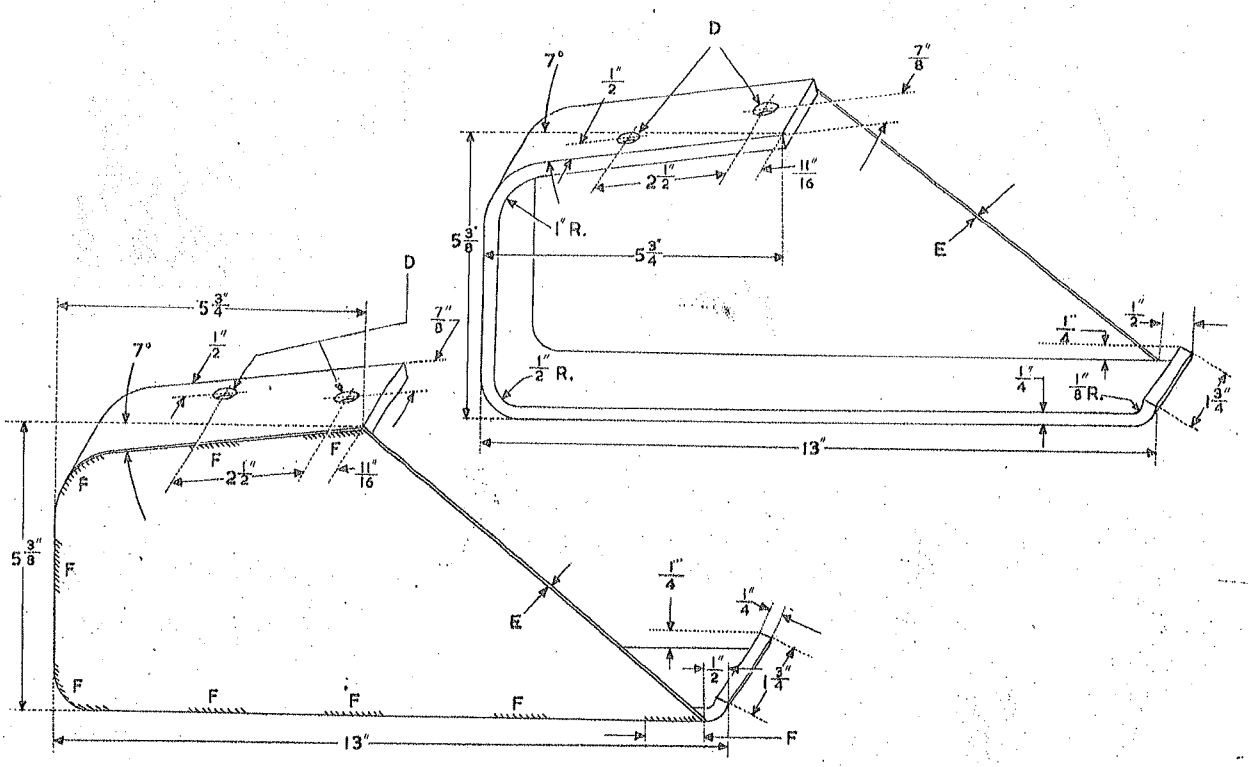

Fig. 2 STR 1495

THIRD SPEED MAINSHAFT GEAR

A 70

The improved gears recently introduced for use on the Austin-Healey 100, refer to this Journal, Volume 24, section "Gearbox", page 32, are also being fitted to the A 70 range of vehicles.

INTERCHANGEABILITY

The new parts together should be used to replace the old ones. They cannot be used separately. A conversion set of parts can be obtained by quoting part number 58G 341.

SUMMARY OF ALTERATION

Description	Number Off	Old Part	New Part	Type and Parts List Publication Number
1st Motion Shaft with cone and adaptor	1	1B 3549	1B 3695	A 70, Pub. 853, pp. 27/28
3rd Speed Gear with cone and adaptor	1	1B 3625	1B 3697	A 70, Pub. 780A, pp. 29/30/31
Laygear with bushes . . .	1	1B 3481	1B 3693	

COMMENCING CHASSIS NUMBER: 160460

FOR YOUR RECORDS	PARTS LISTS
	STOCK CARDS
	PARTS ORDERED
	ALTERATIONS NOTED

Published October 25, 1954

GEARBOX FRONT COVER

16-H.P. Taxi and Hire-Car

To prevent the possibility of oil leaking from the front cover of gearboxes which are fitted with the larger first motion shaft bearing (see this Journal, Volume 24, section "Gearbox", page 26), the following modifications have been introduced to increase the sealing area of the joint washer.

INTERCHANGEABILITY

The modified joint washer can be used to replace the old one and will be supplied for replacements. The part number of the joint washer, 1F 3513, remains unchanged.

The new front cover, part number 1F 3526, is not interchangeable with the old one, part number 1F 3514.

The modified bearing housing can be used to replace the earlier one, and will be supplied for replacements. The unmodified bearing housing will not fit a modified gearbox casing. The part number of the bearing, 1F 3511, remains unchanged. The part number of the gearbox casing, B3-630, remains unchanged; the modified gearbox casing will be supplied for replacements.

The new front cover and the modified bearing housing and joint washer should be used together with the modified gearbox casing.

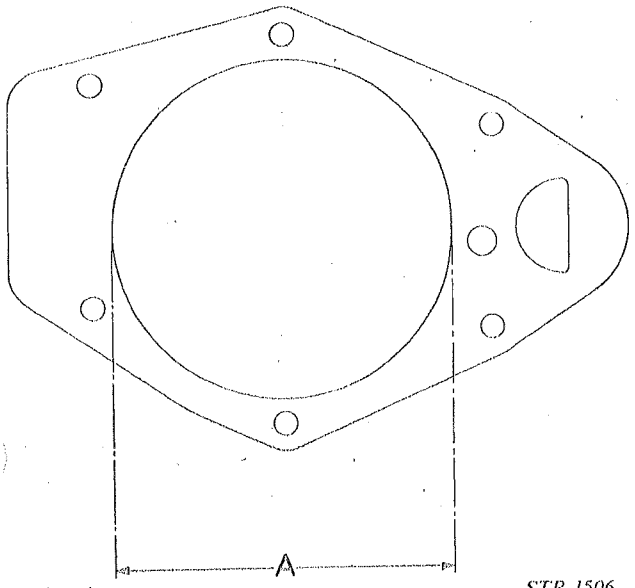

Fig. 1 *STR 1506*

The diameter of the hole A in the paper joint washer has been reduced from 4 1/32" (102.3937 mm.) to 3 13/16" (96.8377 mm.).

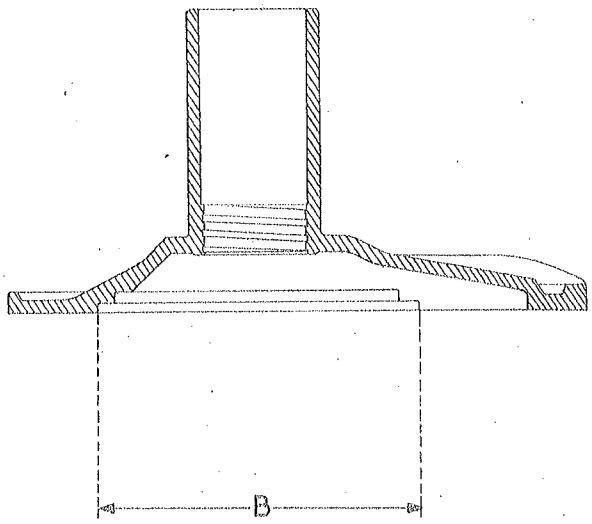

Fig. 2 *STR 1507*

The diameter of the recess B in the front cover has been reduced from 4 1/64" (102.7906 mm.) to 3 29/32" (99.2189 mm.).

FOR YOUR RECORDS	PARTS LISTS
	STOCK CARDS
	PARTS ORDERED
	ALTERATIONS NOTED

Issue 13

Published November 29, 1954

GEARBOX FRONT COVER—*continued*

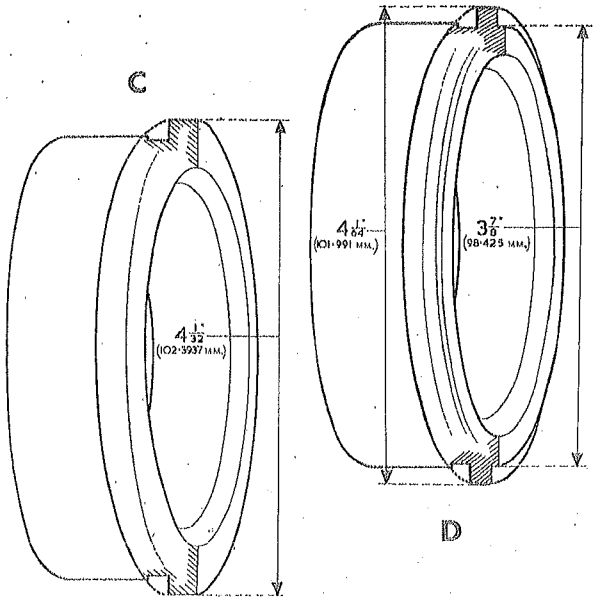

Fig. 3 *STR 1508*

The bearing housing C for the first motion shaft has been modified as shown at D.

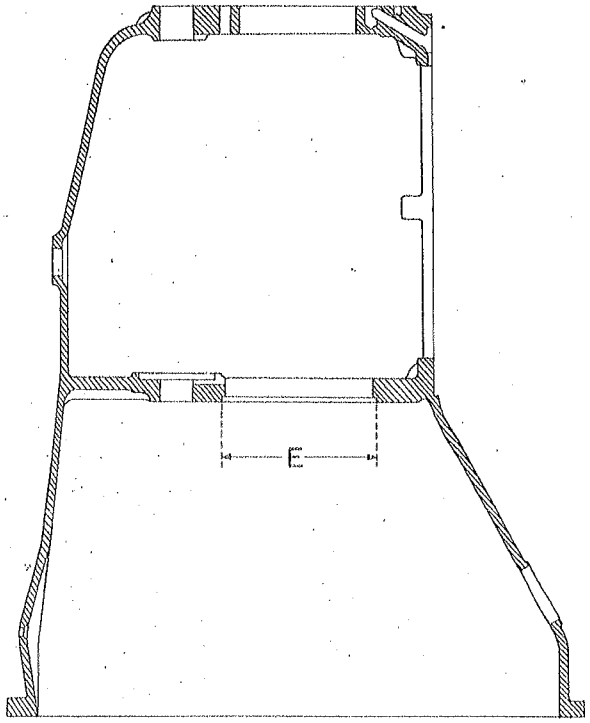

Fig. 4 *STR 1509*

The diameter E of the outer recess for the bearing housing in the gearbox casing has been reduced from $4\frac{3}{64}$" (102.7906 mm.) to $4\frac{1}{32}$" (102.3937 mm.).

SUMMARY OF ALTERATION

Description	Number Off	Old Part	New Part	Type and Parts List Publication Number
Front cover	1	1F 3514	1F 3526	16-H.P. Taxi Pub. 558A, p. 20 16-H.P. Hire-Car Pub. 728, p. 21

COMMENCING CHASSIS NUMBERS:—

16-H.P. Taxi – – 153534

16-H.P. Hire-Car – – 153580

OVERDRIVE OPERATING SOLENOID

Austin-Healey 100

To improve accessibility and facilitate production, the enclosed type solenoid bracket (Fig. 1) has been replaced by an open type bracket. The solenoid is now protected by a metal stoneguard A, and from the effects of the weather by two rubber caps, B and C (see Fig. 2). The solenoid plunger D and operating lever E have also been modified and the plunger now has a rubber stop F in place of an adjusting bolt.

INTERCHANGEABILITY

The old and the new parts are not interchangeable. The overdrive assembly is interchangeable and the part number remains unchanged.

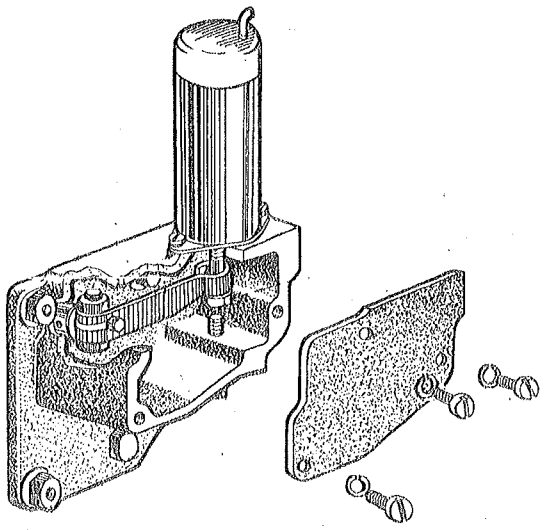

Fig. 1 *STR 1176A*

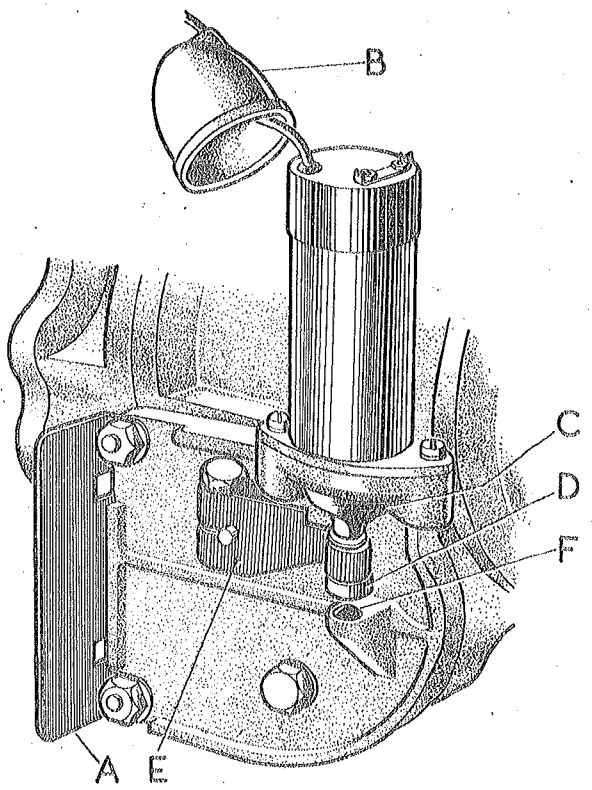

Fig. 2 *STR 1510*

Continued

FOR YOUR RECORDS	PARTS LISTS
	STOCK CARDS
	PARTS ORDERED
	ALTERATIONS NOTED

Issue 13 *Published November 29, 1954*

OVERDRIVE OPERATING SOLENOID—*continued*

Type	Range	Plate	Description	Number per Vehicle	Austin Part Number	Parts List Publication Number
Austin-Healey 100	To O/D 28/1292/3772	C62	Operating solenoid, with plunger, for overdrive	1	1B 2838	Pub. 1050, Electrical, p. 2
		C64	Special screw, plunger to lever	1	*7H 5896	
			Split pin for screw			
	O/D 28/1292/3773 on		Operating solenoid, with plunger, and rubber dust covers, for overdrive	1	17H 5813	
	To O/D 28/1292/3772	C10	Collar for shaft	1	7H 5819	Pub. 1050, Gearbox and Overdrive, p. 5
		C12	Solenoid lever	1	7H 5828	
	O/D 28/1292/3773 on		Collar for shaft	1	17H 5809	
			Solenoid lever	1	17H 5808	
	To O/D 28/1292/3772	C40	Solenoid bracket and side cover for casing	1	7H 5850	Pub. 1050, Gearbox and Overdrive, p. 6
		C44	Cover plate for bracket	1	7H 5854	
			Screws, cover plate to bracket	3	53K 2636	
			Spring washers	3	2K 1209	
		C45	Adjusting screw for solenoid lever	1	53K 2638	
			Locknut for screw	1	FNN 103	
	O/D 28/1292/3773 on		Solenoid bracket and side cover for casing	1	17H 5812	
			Stone guard for solenoid	1	17H 5810	
			Rubber stop for solenoid lever	1	17H 5811	

* Listed in error as 7H 1086.

KNOB FOR STARTER AND AIR STRANGLER CONTROLS

A 40

To provide hand operation of the starter and air strangler controls, a re-designed control knob is now fitted to the "Somerset" Saloon and Coupé model.

The new knob styling ensures a firmer grip when operating either of the above controls.

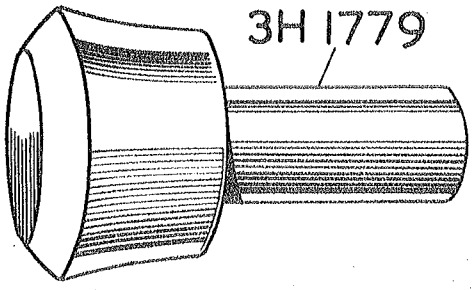

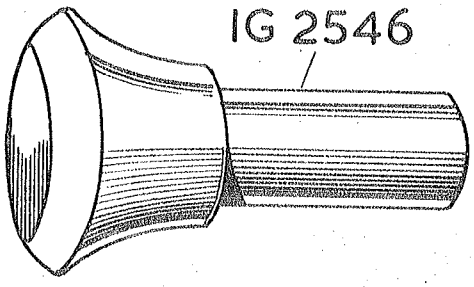

STR 1370

INTERCHANGEABILITY

The new control knob can be used to replace its old counterpart.

SUMMARY OF ALTERATION

Type	Range	Plate	Description	Number per Vehicle	Austin Part Number	Parts List Publication Number
GS.4 GD.5	R.H.S. To C.833601 L.H.S. To C.833606 R.H.S. To C.844628 L.H.S. To C.849651		Knobs for starter and air strangler controls (use 1G 2546)	2	3H 1779	
GS.4 GD.5	R.H.S. C.833602 on L.H.S. C.833607 on R.H.S. C.844629 on L.H.S. C.849652 on		Knobs for starter and air strangler controls	2	1G 2546	Pub. 884, p. 61

FOR YOUR RECORDS	PARTS LISTS
	STOCK CARDS
	PARTS ORDERED
	ALTERATIONS NOTED

Published April 26, 1954

SPEEDOMETER FLEX

A 30

The threaded collar D at the pinion end of the speedometer flex has been reduced in size from $\frac{7}{8}$" Whitworth, 26 threads per inch, to $\frac{3}{4}$" Whitworth, 26 threads per inch. The threaded end A of the speedometer pinion bush has been altered likewise. This change has necessitated using a smaller oil seal, the diameter B of which has been reduced from $\frac{45}{64}$" (17.859 mm.) to $\frac{9}{16}$" (14.287 mm.), together with a smaller oil seal retaining ring, the diameter C of which has been reduced from $\frac{11}{16}$" (17.462 mm.) to $\frac{9}{16}$" (14.287 mm.).

INTERCHANGEABILITY

The old and new parts are interchangeable together but not separately. The new gearbox assembly can be used to replace the old, provided the new speedometer flex is fitted also. The speedometer inner cable remains unchanged.

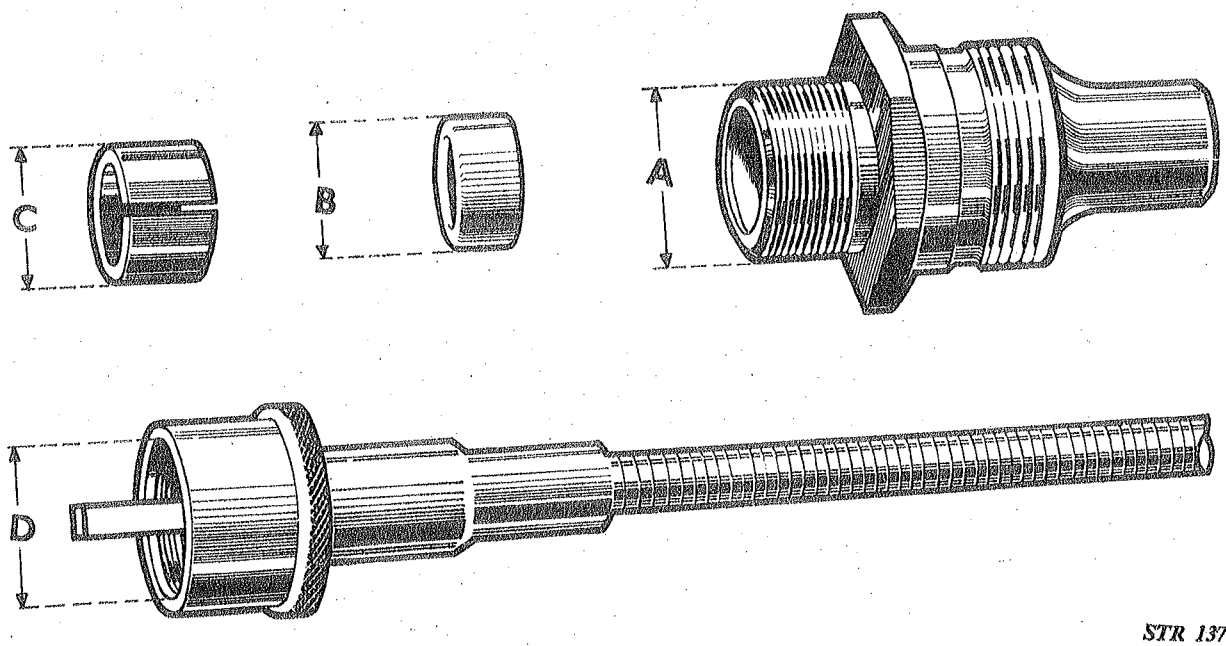

STR 1372

FOR YOUR RECORDS	PARTS LISTS
	STOCK CARDS
	PARTS ORDERED
	ALTERATIONS NOTED

Continued

SPEEDOMETER FLEX—*continued*

SUMMARY OF ALTERATION

Type	Range	Plate	Description	Number per Vehicle	Austin Part Number	Parts List Publication Number
AS.3	R.H.S., To C.28470 L.H.S., To C.29852		Speedometer flex (use 2A 382 with 2A 3256, 2A 3254 and 2A 3255)	1	3H 2197	Pub. 883B, Electrical, p. 1
AS.4	R.H.S., C.25631–33624	C17	Bush for speedometer pinion (use 2A 3256 with 2A 3254, 2A 3255 and 2A 382) . . .	1	2A 3074	Pub. 883B, Gearbox, p. 3
A2S.4	R.H.S., C.25621–33620 L.H.S., C.30715–33623	C16	Oil seal for pinion (use 2A 3254 with 2A 3256, 2A 3255 and 2A 382)	1	3H 964	
		C15	Retaining ring (use 2A 3255 with 2A 3254, 2A 3256 and 2A 382)	1	2A 3075	
AS.4	R.H.S., C.33625 on L.H.S., C.33906 on		Speedometer flex . .	1	2A 382	Pub. 883B, Electrical, p. 1
A2S.4	R.H.S., C.33621 on L.H.S., C.33624 on		Bush for speedometer pinion	1	2A 3256	Pub. 883B, Gearbox, p. 3
			Oil seal for pinion . .	1	2A 3254	
			Retaining ring . . .	1	2A 3255	

REVERSE FLUSHING OF RADIATORS

Further to the article appearing in this Journal, Volume 23, section "Radiator", page 1, specially shaped plugs, part number GT 187, have now been introduced so that a radiator can be reverse flushed without resorting to removal from the vehicle.

It is also recommended that a radiator should be flushed twice annually, and flushed particularly after using anti-freeze during winter time.

The adaptor plugs are designed to accommodate all hoses used on Austin vehicles, and no difficulty should be experienced if the following instructions are adhered to.

1. Open the radiator drain tap and drain the system. When drained, close the tap. If anti-freeze mixture is present in the system it should be drained into a clean container and replaced after flushing.
2. Disconnect the bottom hose from the engine side and insert one of the plugs into the hose.
3. Connect an ordinary hose pipe to the plug and to the main water supply.
4. Disconnect the radiator top hose from the engine side and fit the second plug into the hose. A length of ordinary hose pipe, long enough to reach the nearest drain, should be fitted to this plug. This will prevent water from flowing over the engine whilst the flushing is in progress.
5. Turn on the tap of the main water supply and let the flushing continue for 15–20 minutes.

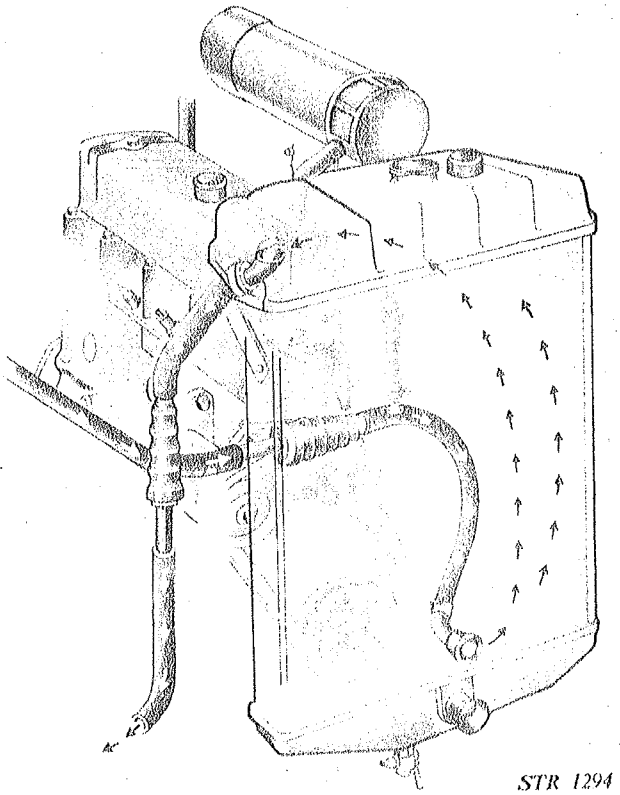

STR 1294

NOTE: The radiator filler cap should be in position and the drain tap closed whilst flushing. Care should be exercised as to the water pressure applied from the main supply. This should not exceed 20–25 lb. After flushing, drain the radiator by means of the drain tap. Re-connect the hoses to the engine, close the drain tap and fill up with clean water in the usual way.

FOR YOUR RECORDS	PARTS LISTS
	STOCK CARDS
	PARTS ORDERED
	ALTERATIONS NOTED

RADIATOR

A 30

A new pressurized radiator has been introduced on the A 30 in keeping with modern practice. The rubber water hose, water outlet elbow to radiator has been modified to suit the new radiator. and at the same time an improved drain tap which requires no joint washer has also been introduced.

INTERCHANGEABILITY

The new radiator with filler cap, rubber hose and drain tap can be used together to replace the old radiator. The filler cap and the rubber hose are NOT separately interchangeable. The new drain tap can be used to replace the old one. When stocks of the old type radiator are exhausted the new one together with the new hose and drain tap will be supplied for replacements.

SUMMARY OF ALTERATION

Type	Range	Plate	Description	Number per Vehicle	Austin Part Number	Parts List Publication Number
A 30	C.101–70375		Radiator with filler cap	1	2A 55	Pub. 883B, Radiator, p. 1
			Filler cap	1	2A 57	
			Drain tap	1	2H 10	
			Washer (Optional thickness to determine position.)	1	2K 4954	
				1	2K 4975	
			Rubber connection (water outlet elbow to radiator)	1	2A 142	
	C.70376 on		Radiator with pressure filler cap	1	2A 2010	
			Filler cap (pressure type)	1	1G 9626	
			Drain tap	1	3H 2724	
			Rubber connection (water outlet elbow to radiator)	1	2A 2007	

FOR YOUR RECORDS	PARTS LISTS
	STOCK CARDS
	PARTS ORDERED
	ALTERATIONS NOTED

Issue 11

Published October 25, 1954

SCHEDULE OF OPERATIONAL TIMES

(INCLUDING ROAD TEST)

A 30 (AS. 3)

Operation Number	Description of Operation	Time cycle (hours: minutes (m))
	ENGINE	
E.1	Remove and refit engine assembly, including all relevant operations and road test	7
E.2	Remove engine assembly and fit replacement, changing over ancillary equipment, including cleaning and checking petrol pump, carburetter, distributor and air cleaner, and road test	8½
E.3	Clean and check dynamo and starter	1½
E.4	Remove cylinder head and oil reservoir, draw pistons, measure cylinder bores, fit new set of pistons, check connecting rod alignment and re-assemble	5
E.5	As Operation E.4 with exception of refitting piston rings in lieu of pistons	4½
E.6	Remove and refit rocker cover	¼
E.7	Remove and refit rocker shaft	1
E.8	Remove, overhaul and refit rocker shaft	2½
E.9	Adjust tappets	½
E.10	Remove and refit cylinder head and/or gasket	2¼
E.11	Tune-up engine, including adjusting tappets, cleaning and adjusting sparking plugs, overhaul distributor, cleaning and adjusting carburetter, cleaning petrol pump, cleaning and oiling air cleaner and adjusting ignition timing	3
E.12	Decarbonise, grind-in valves, face valves and seats as necessary, including all relevant operations and tune-up	6
E.13	Remove and refit cylinder head and change one valve	2½
E.14	Extra per valve	¼
E.15	Remove and refit one valve spring	1
E.16	Extra per spring	¼
E.17	Remove, clean and refit oil reservoir	¾
E.18	Remove and refit one pair of connecting rod bearings	1
E.19	Extra per pair of connecting rod bearings	¼
E.20	Remove and refit manifold	¾
E.21	Remove and refit cylinder side cover	½
E.22	Remove and refit set of tappets	3½

SCHEDULE OF OPERATIONAL TIMES—A 30 (AS.3)—*continued*

Operation Number	Description of Operation	Time cycle (hours: minutes (m))
	ENGINE—*continued*	
E.23	Remove and refit radiator	¾
E.24	Remove and refit crankcase front cover, replacing felt seal and joint washer	1¾
E.25	Remove and refit timing chain, camshaft and crankshaft gears	2
E.26	Remove and refit top water hose	¼
E.27	Remove and refit bottom water hose	½
E.28	Remove and refit thermostat	¼
E.29	Remove and refit water pump	1
E.30	Remove, overhaul and refit water pump	2
E.31	Remove and refit flywheel	4¼
E.32	Remove and refit crankshaft starting nut and/or pulley	1½
E.33	Remove and refit fan belt	¼
E.34	Adjust fan belt	10 m.
E.35	Remove and refit air cleaner	¼
E.36	Remove and replace oil filter	½
	GEARBOX	
G.1	Remove and refit gearbox assembly	3½
G.2	Remove and refit gearbox front cover, including joint washer (including Operation G.1)	3¾
G.3	Remove and refit gearbox rear cover, including fitting joint washer and oil seal	4
	CLUTCH	
C.1	Remove and refit clutch assembly	4
C.2	Remove, replace and refit clutch release bearing	3¾
	PROPELLER SHAFT	
P.1	Remove and refit propeller shaft	½
	REAR AXLE	
R.A.1	Remove and refit rear axle complete, including bleeding and adjusting brakes	2½
R.A.2	Remove and refit gear carrier assembly	1¼
R.A.3	Fit new axle shaft joint washer	¼
R.A.4	Remove and refit hub bearings, one side only	1
R.A.5	Remove and refit hub oil seal, one side only	¾
R.A.6	Remove and refit pinion oil seal	1

SCHEDULE OF OPERATIONAL TIMES—A 30 (AS.3)—*continued*

Operation Number	Description of Operation	Time cycle (hours: minutes (m))
	FRONT SUSPENSION	
F.S.1	Remove and refit front suspension unit complete, one side only, including bleeding and adjusting brakes and adjusting track	2
F.S.2	Remove, overhaul and refit front suspension unit, one side only	3
F.S.3	Remove and refit shock absorber, one side only	1
F.S.4	Remove and refit hub bearings, one side only	1
F.S.5	Remove and refit hub oil seal, one side only	¾
F.S.6	Remove and refit brake shoes, one side only	½
F.S.7	Remove and refit coil spring, one side only	¾
	STEERING	
S.1	Remove and refit steering wheel	¼
S.2	Remove and refit steering assembly	1½
S.3	Remove and refit steering cross tube	¾
S.4	Remove and refit steering side tube, one side only	½
S.5	Remove and refit idler and adjust	1¼
S.6	Check chamber	10 m.
S.7	Check track	10 m.
S.8	Adjust track	¼
	ELECTRICAL EQUIPMENT AND INSTRUMENTS	
E.E.1	Dynamo, remove and refit	½
E.E.2	Starter, remove and refit	½
E.E.3	Coil, remove and refit	¼
E.E.4	Distributor, remove and refit	½
E.E.5	H.T. leads, remove and fit new set	¼
E.E.6	Ignition warning light bulb, remove and refit	5 m.
E.E.7	Headlamp complete, remove and refit	1½
E.E.8	Headlamp light unit and/or bulb, remove and refit	½
E.E.9	Side lamp complete, remove and refit	½
E.E.10	Side lamp bulb, remove and refit	5 m.
E.E.11	Side lamp glass, remove and refit	10 m.

SCHEDULE OF OPERATIONAL TIMES—A 30 (AS.3)—*continued*

Operation Number	Description of Operation	Time cycle (hours: minutes (m))
	ELECTRICAL EQUIPMENT AND INSTRUMENTS—*continued*	
E.E.12	Tail and stop lamp, remove and refit	½
E.E.13	Rear number plate lamp, remove and refit	½
E.E.14	Tail and stop lamp glass, remove and refit	¼
E.E.15	Ignition switch, remove and refit	¾
E.E.16	Starter switch, remove and refit	¼
E.E.17	Panel light switch, remove and refit	¾
E.E.18	Screen wiper switch, remove and refit	¾
E.E.19	Screen wiper motor, remove and refit	1½
E.E.20	Screen wiper drive cable, remove and refit	1¾
E.E.21	Screen wiper blade, remove and refit	5 m.
E.E.22	Trafficator, remove and refit, one side only	½
E.E.23	Horn, remove and refit	½
E.E.24	Control unit, remove and refit	1
E.E.25	Battery, remove and refit, including cleaning tray	½
E.E.26	Petrol gauge, facia unit, remove and refit	1
E.E.27	Petrol gauge, tank unit, remove and refit	¾
E.E.28	Speedometer head, remove and refit	¾
E.E.29	Speedometer drive cable, remove and refit	½
E.E.30	Oil pressure light, remove and refit	5 m.
E.E.31	Ammeter light, remove and refit	5 m.
	BRAKES AND CONTROLS	
B.1	Dismantle and overhaul brakes, including fitting exchange shoes, all relevant operations, bleeding and adjusting, etc.	4½
B.2	Remove road wheels, brake drums, clean out dust from shoes and mechanism, refit, bleed and adjust	1½
B.3	Adjust brakes, including bleeding as necessary	1
B.4	Remove and refit master cylinder, bleed and adjust brakes	2
B.5	Remove and refit one brake hose, bleed and adjust brakes	1

SCHEDULE OF OPERATIONAL TIMES—A 30 (AS.3)—*continued*

Operation Number	Description of Operation	Time cycle (hours: minutes (m))
	CHASSIS	
C.H.1	Remove and refit rear road spring, one side only	1
C.H.2	Remove rear road spring, fit new bushes and refit spring, one only	1½
C.H.3	Remove and refit one rear shock absorber	1
C.H.4	Remove and refit anti-roll bar	½
C.H.5	Remove and refit exhaust system complete	1
C.H.6	Remove and refit exhaust down pipe	½
C.H.7	Remove and refit exhaust silencer	½
C.H.8	Remove and refit petrol tank	1¼
C.H.9	Remove and refit petrol pipe, tank to pump	½
C.H.10	Remove and refit petrol pipe, pump to carburetter	10 m.
	BODY MOUNTINGS	
B.M.1	Remove and refit bonnet assembly	¾
B.M.2	Remove and refit bonnet prop	10 m.
B.M.3	Remove and refit radiator grille	1
B.M.4	Remove and refit front wing, outer section, one side only	3½
B.M.5	Remove and refit front bumper assembly	½
B.M.6	Remove and refit rear bumper assembly	½
	BODY FITTINGS	
B.F.1	Remove, refit and rehang front door complete, each	1
B.F.2	Remove and refit front door lock mechanism, each	1½
B.F.3	Remove and refit front door private lock	¾
B.F.4	Remove and refit front door glass, each	1½
B.F.5	Remove, refit and rehang rear door complete, each	1
B.F.6	Remove and refit rear door lock mechanism, each	1½
B.F.7	Remove and refit rear door glass, each	1½
B.F.8	Remove and refit outside door handle, each	20 m.
B.F.9	Remove and refit windscreen	1½
B.F.10	Remove and refit rear light	½
B.F.11	Remove and refit rear boot lid (early type)	¾
B.F.12	Remove and refit rear boot lid hinge, each (late type)	1
B.F.13	Remove and refit rear boot lid lock	½
B.F.14	Fit new weatherstrip to rear boot	1
B.F.15	Remove and refit front seat complete, each	20 m.
B.F.16	Remove and refit rear seat squab	½

SCHEDULE OF OPERATIONAL TIMES

(INCLUDING ROAD TEST)

A 40

Operation Number	Description of Operation	Time cycle (hours: minutes (m))		
		GS.2, GV.2, GQU.2, GP.2	GS.3, GV.3, GQU.3, GP.3	GS.4, GV.4, GQU.4, GP.4
	ENGINE			
E.1	Remove and refit engine assembly, including all relevant operations and road test	8	8	8½
E.2	Remove engine assembly and fit replacement, changing over ancillary equipment, including cleaning and checking petrol pump, carburetter, distributor and air cleaner, and road test	9½	9½	10
E.2A	Clean and check dynamo and starter	1½	1½	1½
E.3	Remove cylinder head and oil reservoir, draw pistons, measure cylinder bores, fit new set of pistons, check connecting rod alignment and re-assemble. (Does not include Operation E.10)	6	6	6
E.4	Remove cylinder head and oil reservoir, draw pistons, measure cylinder bores, fit new set of rings, check connecting rod alignment and re-assemble. (Does not include Operation E.10)	5½	5½	5½
E.5	Remove and refit rocker cover	¼	¼	¼
E.6	Remove and refit rocker shaft	1	1	1
E.7	Overhaul rocker shaft	2½	2½	2½
E.8	Adjust tappets	½	½	½
E.9	Remove and refit cylinder head and/or gasket	2¾	2¾	2¾
E.10	Tune up engine, including adjusting tappets, cleaning and adjusting sparking plugs, overhauling distributor, cleaning and adjusting carburetter, cleaning petrol pump, cleaning and oiling air cleaner and adjusting ignition timing	3	3	3
E.11	Decarbonize, grind-in valves, including facing valves and seats, tune up engine and road test	7	7	7
E.12	Remove and refit cylinder head and change one valve	3	3	3
E.13	Extra per valve	¼	¼	¼
E.14	Remove and refit one valve spring	1	1	1

SCHEDULE OF OPERATIONAL TIMES—A 40—*continued*

Operation Number	Description of Operation	Time cycle (hours: minutes (m)) GS.2, GV.2, GQU.2, GP.2	GS.3, GV.3, GQU.3, GP.3	GS.4, GV.4, GQU.4, GP.4
	ENGINE—*continued*			
E.15	Extra per spring	¼	¼	¼
E.16	Remove, clean and refit oil reservoir	¾	¾	¾
E.17	Remove and refit one pair of connecting rod bearings	1	1	1
E.18	Extra per pair of connecting rod bearings	¼	¼	¼
E.19	Remove and refit oil pump	1	1	1
E.20	Remove and refit manifold	1	1	1
E.21	Remove and refit cylinder side cover	1¼	1¼	1¼
E.22	Remove and refit set of tappets	4	4	4
E.23	Remove and refit radiator	1¼	1¼	1¼
E.24	Remove and refit crankcase front cover, replacing felt seal and joint washer	2	2	2½
E.25	Remove and refit timing chain, camshaft and crankshaft gears	2½	2½	3
E.26	Remove and refit top water hose	¼	¼	¼
E.27	Remove and refit bottom water hose	½	½	½
E.28	Remove and refit thermostat	¼	¼	¼
E.29	Remove and refit water pump	1¾	1¾	2
E.30	Overhaul water pump	2½	2½	2¾
E.31	Remove and refit flywheel	4½	5	5
E.32	Remove and refit crankshaft starting nut and/or pulley	1¾	1¾	1¾
E.33	Remove and refit fan belt	¼	¼	¼
E.34	Adjust fan belt	10 m.	10 m.	10 m.
E.35	Remove and refit air cleaner, including cleaning and lubricating	½	½	½
E.36	Change oil filter	¾	¾	½
	GEARBOX			
G.1	Remove and refit gearbox assembly	3¾	4¼	4¼
G.2	Remove and refit change speed control mechanism	—	1¾	1¾
G.3	Overhaul change speed control mechanism (includes Operation G.2)	—	2	2
G.4	Adjust gear selector cable	—	½	½

SCHEDULE OF OPERATIONAL TIMES—A 40—*continued*

Operation Number	Description of Operation	Time cycle (hours: minutes (m))		
		GS.2, GV.2, GQU.2, GP.2	GS.3, GV.3, GQU.3, GP.3	GS.4, GV.4, GQU.4, GP.4
	GEARBOX—*continued*			
G.5	Remove and refit gearbox front cover, including joint washer	4	4½	4½
G.6	Remove and refit gearbox rear cover, including fitting joint washer and oil seal	4¼	4¾	4¾
	CLUTCH			
C.1	Remove and refit clutch assembly	4	4½	4½
	PROPELLER SHAFT			
P.1	Remove and refit propeller shaft	1	½	½
	REAR AXLE			
R.A.1	Remove and refit rear axle complete, including bleeding and adjusting brakes	3	3	3
R.A.2	Remove and refit gear carrier assembly	1½	1½	1½
R.A.3	Fit new axle shaft joint washer	¼	¼	¼
R.A.4	Remove and refit hub bearing, one side only	1	1	1
R.A.5	Remove and refit hub oil seal, one side only	¾	¾	¾
R.A.6	Remove and refit pinion oil seal	1	1	1
	FRONT SUSPENSION			
F.S.1	Remove and refit front suspension unit complete, one side only, includes bleeding and adjusting brakes and adjusting track	2	2	2
F.S.2	Remove, overhaul and refit suspension unit	5	5	5
F.S.3	Remove and refit shock absorber, one side only	1	1	1
F.S.4	Remove and refit hub bearings, one side only	1	1	1
F.S.5	Remove and refit hub oil seal, one side only	1	1	1
F.S.6	Remove and refit brake shoes, one side only	½	½	½
F.S.7	Remove and refit coil spring, one side only	¾	¾	¾
	STEERING			
S.1	Remove and refit trafficator and horn switch	¾	½	½
S.2	Remove and refit steering wheel.	1	1	1

SCHEDULE OF OPERATIONAL TIMES—A 40—*continued*

Operation Number	Description of Operation	Time cycle (hours: minutes (m)) GS.2, GV.2, GQU.2, GP.2	GS.3, GV.3, GQU.3, GP.3	GS.4, GV.4, GQU.4, GP.4
	STEERING—*continued*			
S.3	Remove and refit steering assembly (includes Operations S.1, S.2, and S.11, also change speed controls as necessary)	3	3½	3½
S.4	Remove and refit steering cross tube	½	½	½
S.5	Remove and refit steering side tube, one side only	½	½	½
S.6	Remove and refit idler and adjust	1¼	1¼	1¼
S.7	Replace one pair of cross and/or side tube ends after removal	¼	¼	¼
S.8	Remove and refit drop arm	½	½	½
S.9	Check camber	10 m.	10 m.	10 m.
S.10	Check track	10 m.	10 m.	10 m.
S.11	Adjust track	¼	¼	¼
	ELECTRICAL EQUIPMENT AND INSTRUMENTS			
E.E.1	Dynamo, remove and refit	½	½	½
E.E.2	Starter, remove and refit	¾	¾	¾
E.E.3	Coil, remove and refit	¼	¼	¼
E.E.4	Distributor, remove and refit	½	½	½
E.E.5	H.T. leads, remove and fit new set	¼	¼	¼
E.E.6	Ignition warning light bulb, remove and refit	5 m.	5 m.	5 m.
E.E.7	Headlamp complete, remove and refit	¾	¾	¾
E.E.8	Headlamp light unit and/or bulb, remove and refit	½	½	½
E.E.9	Side lamp complete, remove and refit	¾	¾	½
E.E.10	Side lamp bulb, remove and refit	5 m.	5 m.	10 m.
E.E.11	Fog lamp, remove and refit	—	—	—
E.E.12	Side lamp glass, remove and refit	10 m.	10 m.	10 m.
E.E.13	Headlamp glass, remove and refit	—	—	—
E.E.14	Tail and stop lamp, remove and refit, one side only	½	½	½
E.E.15	Rear number plate lamp, remove and refit.	½	½	½
E.E.16	Tail and stop lamp glass, remove and refit, one side only	½	½	½
E.E.17	Ignition and lighting switch, remove and refit	1½	1¼	1¼
E.E.18	Starter switch, remove and refit	1½	1	1
E.E.19	Panel light switch, remove and refit	½	1	1
E.E.20	Screen wiper switch, remove and refit	½	1	1

SCHEDULE OF OPERATIONAL TIMES—A 40—*continued*

Operation Number	Description of Operation	Time cycle (hours: minutes (m)) GS.2, GV.2, GQU.2, GP.2	GS.3, GV.3, GQU.3, GP.3	GS.4, GV.4, GQU.4, GP.4
	ELECTRICAL EQUIPMENT AND INSTRUMENTS—*continued*			
E.E.21	Screen wiper motor, remove and refit	1½	1½	2
E.E.22	Screen wiper drive cable, remove and refit (includes Operation E.E.21)	1¾	1¾	2¼
E.E.23	Screen wiper blade, remove and refit	5 m.	5 m.	5 m.
E.E.24	Trafficator, remove and refit, one side only	1½	1½	1
E.E.25	Horn, remove and refit, one only	¾	¾	¾
E.E.26	Control unit, remove and refit	1	1	1
E.E.27	Battery, remove and refit, including cleaning tray	¾	¾	1
E.E.28	Petrol gauge, facia unit, remove and refit	1	1	1
E.E.29	Petrol gauge, tank unit, remove and refit (does not include Operation C.H.10)	½	½	½
E.E.30	Speedometer head, remove and refit	½	1	1
E.E.31	Speedometer drive cable, remove and refit	½	½	½
E.E.32	Oil pressure gauge, remove and refit	½	1	1
E.E.33	Ammeter, remove and refit	½	1	1
E.E.34	Radiator, thermometer gauge, remove and refit	1	1	1¼
E.E.35	Interior roof lamp, remove and refit	½	½	½
E.E.36	Dip switch, remove and refit	¾	¾	¾
	BRAKES AND CONTROLS			
B.1	Dismantle and overhaul brakes, including wheel cylinders, expander boxes where applicable, fitting exchange shoes, bleeding and adjusting (does not include Operation B.4)	5	5	5
B.2	Remove road wheels, brake drums, clean out dust from shoes and mechanism, refit, bleed and adjust	2	2	2
B.3	Adjust brakes, including bleeding as necessary	1	1	1
B.4	Remove and refit master cylinder	2	2	2
B.5	Remove and refit one brake hose	1¼	1¼	1¼
B.6	Remove and refit hand brake cable	¾	¾	¾
B.7	Remove and refit stop light switch	¾	1¼	1¼

SCHEDULE OF OPERATIONAL TIMES—A 40—*continued*

Operation Number	Description of Operation	Time cycle (hours: minutes (m)) GS.2, GV.2, GQU.2, GP.2	GS.3, GV.3, GQU.3, GP.3	GS.4, GV.4, GQU.4, GP.4
	CHASSIS			
C.H.1	Remove and refit rear road spring, one side only	1¼	1¼	1¼
C.H.2	Fit new spring bushes, one side only	1¾	1¾	1¾
C.H.3	Remove and refit rear shock absorber, each, including changing link if necessary and topping up	1	1	1
C.H.4	Drain and refill shock absorber, each (does not include Operation C.H.3 or F.S.3)	¼	¼	¼
C.H.5	Remove and refit anti-roll bar	½	½	½
C.H.6	Remove and refit exhaust system complete	1¼	1¼	1¼
C.H.7	Remove and refit exhaust down pipe	¾	¾	¾
C.H.8	Remove and refit exhaust silencer	½	½	½
C.H.9	Remove and refit exhaust tail pipe, where separate pipe is fitted	¼	¼	¼
C.H.10	Remove and refit petrol tank	1¼	1¼	1¼
C.H.11	Remove and refit petrol pipe, tank to pump	½	½	½
C.H.12	Remove and refit petrol pipe, pump to carburetter	10 m.	10 m.	10 m.
C.H.13	Remove and refit flexible petrol pipe	5 m.	5 m.	5 m.
	BODY MOUNTINGS			
B.M.1	Remove and refit bonnet assembly	¾	¾	½
B.M.2	Remove and refit bonnet prop	10 m.	10 m.	10 m.
B.M.3	Remove and refit bonnet lock	20 m.	20 m.	½
B.M.4	Remove and refit radiator grille and/or cowl complete	1	1	¼
B.M.5	Remove and refit front wing, outer section, one side only	1½	1½	2½
B.M.6	Remove and refit rear wing, one side only	¾	¾	¾
B.M.7	Remove and refit front bumper assembly	1	1	1
B.M.8	Remove and refit one front bumper outer section	—	—	—
B.M.9	Remove and refit front bumper centre section	—	—	—
B.M.10	Remove and refit rear bumper assembly	1	1	1
B.M.11	Remove and refit one rear bumper outer section	—	—	—
B.M.12	Remove and refit rear bumper centre section	—	—	—
B.M.13	Remove and refit overider—each	¼	¼	¼

SCHEDULE OF OPERATIONAL TIMES—A 40—*continued*

Operation Number	Description of Operation	Time cycle (hours: minutes (m))		
		GS.2, GV.2, GQU.2, GP.2	GS.3, GV.3, GQU.3, GP.3	GS.4 GV.4, GQU.4, GP.4
	BODY FITTINGS			
B.F.1	Remove, refit and rehang front door complete, each	1¼	1¼	1¼
B.F.2	Remove and refit front door lock mechanism, each	2½	2½	2½
B.F.3	Remove and refit front door private lock	½	½	½
B.F.4	Remove and refit front door window mechanism, each	2	2	2
B.F.5	Remove and refit front door glass, each	3	3	3
B.F.6	Remove and refit front door ventilating window, each	1¼	1¼	1¼
B.F.7	Remove, refit and rehang rear door complete, each	1¼	1¼	1¼
B.F.8	Remove and refit rear door lock mechanism, each	2½	2½	2½
B.F.9	Remove and refit rear door window mechanism, each	2	2	2
B.F.10	Remove and refit rear door glass, each	3	3	3
B.F.11	Remove and refit rear door ventilating window, each	—	—	1
B.F.12	Remove and refit outside door handle, each	¾	¾	¾
B.F.13	Remove and refit inside door handle, each	¼	¼	¼
B.F.14	Remove and refit window winder handle, each	¼	¼	¼
B.F.15	Remove and refit windscreen	*2	2	1½
B.F.16	Fit new glass to windscreen frame after removal	2	2	—
B.F.17	Remove and refit rear light	2	2	2
B.F.18	Remove and refit quarter light, each	2	2	2
B.F.19	Remove and refit rear boot lid	50 m.	50 m.	50 m.
B.F.20	Remove and refit rear boot lid hinge, each	¼	¼	¼
B.F.21	Remove and refit rear boot lid lock	½	½	½
B.F.22	Fit new weather strip to rear boot	2½	2½	¾
B.F.23	Remove and refit sliding roof panel	1½	1½	1½
B.F.24	Remove and refit front seat complete, each	10 m.	10 m.	10 m.
B.F.25	Remove and refit rear seat squab	¼	¼	¼
B.F.26	Remove and refit chrome rear waist mould	—	—	1½

*Early type GS.2, GV.2, GQU.2, GP.2—7 hours

SCHEDULE OF OPERATIONAL TIMES

(INCLUDING ROAD TEST)

A 70

Operation Number	Description of Operation	Time cycle (hours : minutes (m)) BS.2, BW.3, BQU.2	Time cycle (hours : minutes (m)) BS.3, BK.3, BW.4
	ENGINE		
E.1.	Remove and refit engine assembly, including all relevant operations, and road test	8½	9½
E.2	Remove engine assembly and fit replacement, changing over ancillary equipment, including cleaning and checking petrol pump, carburetter, distributor and air cleaner, and road test	10	11
E.2A	Clean and check dynamo and starter	1½	1½
E.3	Remove cylinder head and oil reservoir, draw pistons, measure cylinder bores, fit new set of pistons, check connecting rod alignment and re-assemble. (Does not include Operation E.10)	6¼	6½
E.4	Remove cylinder head and oil reservoir, draw pistons, measure cylinder bores, fit new set of rings, check connecting rod alignment and re-assemble. (Does not include Operation E.10)	5¾	6
E.5	Remove and refit rocker cover	½	½
E.6	Remove and refit rocker shaft	1½	1½
E.7	Overhaul rocker shaft	2¾	2¾
E.8	Adjust tappets	¾	¾
E.9	Remove and refit cylinder head and/or gasket . . .	3	3¼
E.10	Tune up engine, including adjusting tappets, cleaning and adjusting sparking plugs, overhauling distributor, cleaning and adjusting carburetter, cleaning petrol pump, cleaning and oiling air cleaner and adjusting ignition timing	4	4
E.11	Decarbonize, grind-in valves, including facing valves and seats, tune engine and road test	8	8
E.12	Remove and refit cylinder head and change one valve .	3¼	3½
E.13	Extra per valve	¼	¼
E.14	Remove and refit one valve spring	1	1
E.15	Extra per spring	¼	¼

SCHEDULE OF OPERATIONAL TIMES—A 70—*continued*

Operation Number	Description of Operation	Time cycle (hours : minutes (m)) BS.2, BW.3, BQU.2	Time cycle (hours : minutes (m)) BS.3, BK.3, BW.4
	ENGINE—*continued*		
E.16	Remove, clean and refit oil reservoir	¾	¾
E.17	Remove and refit one pair of connecting rod bearings	1	1
E.18	Extra per pair of connecting rod bearings	¼	¼
E.19	Remove and refit oil pump	1	1
E.20	Remove and refit manifold	1¼	1¼
E.21	Remove and refit cylinder side cover	1¾	1¾
E.22	Remove and refit set of tappets	4¼	4¼
E.23	Remove and refit radiator	1¼	1¼
E.24	Remove and refit crankcase cover (front), replacing felt seal and joint washer	3½	3½
E.25	Remove and refit timing chain, camshaft and crankshaft gears	4¼	4¼
E.26	Remove and refit top water hose	¼	¼
E.27	Remove and refit bottom water hose	½	½
E.28	Remove and refit thermostat	½	½
E.29	Remove and refit water pump	2	2
E.30	Remove, overhaul and refit water pump	2¾	2¾
E.31	Remove and refit flywheel	5¼	5¼
E.32	Remove and refit crankshaft starting nut and/or pulley	2	2
E.33	Remove and refit fan belt	¼	¼
E.34	Adjust fan belt	10 m.	10 m.
E.35	Remove and refit air cleaner, including cleaning and lubricating	¾	¾
E.36	Change oil filter element	½	½
	GEARBOX		
G.1	Remove and refit gearbox assembly	4¾	4¾
G.2	Remove and refit change speed control mechanism	1¾	1¾
G.3	Overhaul change speed control mechanism	2	2
G.4	Adjust gear selector cable	½	½
G.5	Remove and refit gearbox front cover, including fitting joint washer and oil seal	5¼	5¼
G.6	Remove and refit gearbox rear cover, including fitting joint washer and oil seal	5½	5½

SCHEDULE OF OPERATIONAL TIMES—A 70—*continued*

Operation Number	Description of Operation	Time cycle (hours : minutes (m))	
		BS.2, BW.3, BQU.2	BS.3, BK.3, BW.4
	CLUTCH		
C.1	Remove and refit clutch assembly	5	5
	PROPELLER SHAFT		
P.1	Remove and refit propeller shaft	1¼	1¼
	REAR AXLE		
R.A.1	Remove and refit rear axle complete, including bleeding and adjusting brakes	3¼	3¼
R.A.2	Remove and refit gear carrier assembly	1¾	1¾
R.A.3	Fit new axle shaft joint washer	¼	¼
R.A.4	Remove and refit hub bearings, one pair only . . .	1	1
R.A.5	Remove and refit hub oil seal, one side only . . .	¾	¾
R.A.6	Remove and refit pinion oil seal	1	1
	FRONT SUSPENSION		
F.S.1	Remove and refit front suspension unit complete, one side only, includes bleeding and adjusting brakes and adjusting track	2	2
F.S.2	Remove, overhaul and refit suspension unit . . .	5	5
F.S.3	Remove and refit shock absorber, one side only . .	1	1
F.S.4	Remove and refit hub bearings, one side only . .	1	1
F.S.5	Remove and refit hub oil seal, one side only . . .	1	1
F.S.6	Remove and refit brake shoes, one side only . . .	½	½
F.S.7	Remove and refit coil spring, one side only . . .	¾	¾
	STEERING		
S.1	Remove and refit trafficator and horn switch . . .	¾	½
S.2	Remove and refit steering wheel	1	1
S.3	Remove and refit steering assembly. (Includes Operations S.1, S.2 and S.11, also change speed controls as necessary)	4	4
S.4	Remove and refit steering cross tube	½	½
S.5	Remove and refit steering side tube, one side only .	½	½
S.6	Remove and refit idler, including adjusting	1¼	1¼
S.7	Replace one pair of cross and/or side tube ends after removal	¼	¼

SCHEDULE OF OPERATIONAL TIMES—A 70—*continued*

Operation Number	Description of Operation	Time cycle (hours : minutes (m))	
		BS.2, BW.3, BQU.2	BS.3, BK.3, BW.4
	STEERING—*continued*		
S.8	Remove and refit drop arm	½	½
S.9	Check camber	10 m.	10 m.
S.10	Check track	10 m.	10 m.
S.11	Adjust track	¼	¼
	ELECTRICAL EQUIPMENT AND INSTRUMENTS		
E.E.1	Dynamo, remove and refit	¾	¾
E.E.2	Starter, remove and refit	¾	¾
E.E.3	Coil, remove and refit	¼	¼
E.E.4	Distributor, remove and refit	½	½
E.E.5	H.T. Leads, remove and fit new set	¼	¼
E.E.6	Ignition warning light bulb, remove and refit	5 m.	5 m.
E.E.7	Headlamp complete, remove and refit	¾	¾
E.E.8	Headlamp light unit and/or bulb, remove and refit	½	½
E.E.9	Side lamp complete, remove and refit	¾	½
E.E.10	Side lamp bulb, remove and refit	5 m.	10 m.
E.E.11	Fog Lamp, remove and refit	—	—
E.E.12	Side Lamp Glass, remove and refit	10 m.	10 m.
E.E.13	Headlamp Glass, remove and refit	—	—
E.E.14	Tail and stop lamp, remove and refit, one side only	½	½
E.E.15	Rear number plate lamp, remove and refit	¾	½
E.E.16	Tail and stop lamp glass, remove and refit, one side only	½	½
E.E.17	Ignition and lighting switch, remove and refit	1½	1¼
E.E.18	Starter switch, remove and refit	1½	1¼
E.E.19	Panel light switch, remove and refit	1½	1¼
E.E.20	Screen wiper switch, remove and refit	1½	1¼
E.E.21	Screen wiper motor, remove and refit	1½	2
E.E.22	Screen wiper drive cable, remove and refit (includes Operation E.E.21)	2	2¼

SCHEDULE OF OPERATIONAL TIMES—A 70—*continued*

Operation Number	Description of operation	Time cycle (hours : minutes (m))	
		BS.2, BW.3, BQU.2	BS.3, BK.3, BW.4
	ELECTRICAL EQUIPMENT AND INSTRUMENTS —*continued*		
E.E.23	Screen wiper blade, remove and refit	5 m.	5 m.
E.E.24	Trafficator, remove and refit, one side only . . .	1½	1
E.E.25	Horn, remove and refit, one side only	¾	¾
E.E.26	Control unit, remove and refit	1	1
E.E.27	Battery, remove and refit, including cleaning tray . .	1	1
E.E.28	Petrol gauge, facia unit, remove and refit	1¼	1
E.E.29	Petrol gauge, tank unit, remove and refit. (Does not include Operation C.H. 10)	½	½
E.E.30	Speedometer head, remove and refit	1¼	1¼
E.E.31	Speedometer drive cable, remove and refit	½	½
E.E.32	Oil pressure gauge, remove and refit	1¼	1
E.E.33	Ammeter, remove and refit	1¼	1
E.E.34	Radiator thermometer gauge, remove and refit . .	—	1¼
E.E.35	Interior roof lamp, remove and refit	½	½
E.E.36	Dip switch, remove and refit	¾	¾
	BRAKES AND CONTROLS		
B.1	Dismantle and overhaul brakes, including wheel cylinders, expander boxes where applicable, fitting exchange shoes, bleeding and adjusting	5	5
B.2	Remove road wheels, brake drums, clean out dust from shoes and mechanism, refit, bleed and adjust . . .	2	2
B.3	Adjust brakes, including bleeding as necessary . . .	1	1
B.4	Remove and refit master cylinder	2	2
B.5	Remove and refit one brake hose	1¼	1¼
B.6	Remove and refit handbrake cable	¾	¾
B.7	Remove and refit stop light switch	¾	¾

SCHEDULE OF OPERATIONAL TIMES—A 70—*continued*

Operation Number	Description of Operation	Time cycle (hours : minutes (m))	
		BS.2, BW.3, BQU.2	BS.3, BK.3, BW.4
	CHASSIS		
C.H.1	Remove and refit rear road spring, one side only	1¼	1¼
C.H.2	Fit new spring bushes, one side only	1¾	1¾
C.H.3	Remove and refit rear shock absorber, each (including changing link if necessary and topping up	1	1
C.H.4	Drain and refill shock absorber, each (does not include Operations C.H.3 or F.S.3)	¼	¼
C.H.5	Remove and refit anti-roll bar	½	½
C.H.6	Remove and refit exhaust system complete	1½	1½
C.H.7	Remove and refit exhaust down pipe	¾	¾
C.H.8	Remove and refit exhaust silencer	¾	¾
C.H.9	Remove and refit exhaust tail pipe—where separate pipe is fitted	¼	¼
C.H.10	Remove and refit petrol tank	1½	1½
C.H.11	Remove and refit petrol pipe, tank to pump	½	½
C.H.12	Remove and refit petrol pipe, pump to carburetter	10 m.	10 m.
C.H.13	Remove and refit flexible petrol pipe	¼	¼
	BODY MOUNTINGS		
B.M.1	Remove and refit bonnet assembly	1	¾
B.M.2	Remove and refit bonnet prop	—	¼
B.M.3	Remove and refit bonnet lock	20 m.	½
B.M.4	Remove and refit radiator grille and/or cowl complete	1	¼
B.M.5	Remove and refit front wing, outer section, one side only	2	2½
B.M.6	Remove and refit rear wing, one side only	¾	¾
B.M.7	Remove and refit front bumper assembly	1½	1½
B.M.8	Remove and refit one front bumper outer section	40 m.	40 m.
B.M.9	Remove and refit front bumper centre section	50 m.	50 m.
B.M.10	Remove and refit rear bumper assembly	1½	1½
B.M.11	Remove and refit one rear bumper outer section	40 m.	40 m.
B.M.12	Remove and refit rear bumper centre section	50 m.	50 m.
B.M.13	Remove and refit overider—each	¼	¼

SCHEDULE OF OPERATIONAL TIMES—A 70—*continued*

Operation Number	Description of Operation	Time cycle (hours : minutes (m))	
		BS.2, BW.3, BQU.2,	BS.3, BK.3, BW.4
	BODY FITTINGS		
B.F.1	Remove, refit and rehang front door complete, each	1½	1½
B.F.2	Remove and refit front door lock mechanism, each	2	2½
B.F.3	Remove and refit front door private lock	½	½
B.F.4	Remove and refit front door window mechanism, each	2	2
B.F.5	Remove and refit front door glass, each	3	3
B.F.6	Remove and refit front door ventilating window, each	1¼	1¼
B.F.7	Remove, refit and rehang rear door complete, each	1¼	1¼
B.F.8	Remove and refit rear door lock mechanism, each	2½	2½
B.F.9	Remove and refit rear door window mechanism, each	2	2
B.F.10	Remove and refit rear door glass, each	3	3
B.F.11	Remove and refit rear door ventilating window, each	—	1¼
B.F.12	Remove and refit outside door handle, each	¾	¾
B.F.13	Remove and refit inside door handle, each	¼	¼
B.F.14	Remove and refit window winder handle, each	¼	¼
B.F.15	Remove and refit windscreen	2½	2
B.F.16	Fit new glass to windscreen frame after removal	2	—
B.F.17	Remove and refit rear light	2	2
B.F.18	Remove and refit quarter light, each	2	2
B.F.19	Remove and refit rear boot lid	50 m.	50 m.
B.F.20	Remove and refit rear boot lid hinge, each	¼	¼
B.F.21	Remove and refit rear boot lid lock	½	½
B.F.22	Fit new weatherstrip to rear boot	2	¾
B.F.23	Remove and refit sliding roof panel	1½	1½
B.F.24	Remove and refit front seat complete, each	10 m.	10 m.
B.F.25	Remove and refit rear seat squab	¼	¼
B.F.26	Remove and refit chrome rear waist mould	—	1¾

SCHEDULE OF OPERATIONAL TIMES

(INCLUDING ROAD TEST)

A 90

Operation Number	Description of Operation	Time cycle (hours: minutes (m))	
		BD.2	BE.2
	ENGINE		
E.1	Remove and refit engine assembly, including all relevant operations, and road test	10½	10½
E.2	Remove engine assembly and fit replacement, changing over ancillary equipment, including cleaning and checking petrol pump, carburetter and air cleaner, and road test	12	12
E.2A	Clean and check dynamo and starter	1½	1½
E.3	Remove cylinder head and oil reservoir, draw pistons, measure cylinder bores, fit new set of pistons, check connecting rod alignment and re-assemble. (Does not include Operation E.10)	7¼	7¼
E.4	Remove cylinder head and oil reservoir, draw pistons, measure cylinder bores, fit set of new rings, check connecting rod alignment and re-assemble (does not include Operation E.10)	6¾	6¾
E.5	Remove and refit rocker cover	½	½
E.6	Remove and refit rocker shaft	1½	1½
E.7	Overhaul rocker shaft	2¾	2¾
E.8	Adjust tappets	¾	¾
E.9	Remove and refit cylinder head	4	4
E.10	Tune up engine, including tappets, plugs, distributor, carburetter, petrol pump and road test	5	5
E.11	Decarbonise, grind-in valves, including facing valves and seats, tune engine and road test	8½	8½
E.12	Remove and refit cylinder head and change one valve	4¼	4¼
E.13	Extra per valve	¼	¼
E.14	Remove and refit one valve spring	1	1
E.15	Extra per spring	¼	¼
E.16	Remove, clean and refit oil reservoir	¾	¾

SCHEDULE OF OPERATIONAL TIMES—A 90—*continued*

Operation Number	Description of Operation	Time cycle (hours: minutes (m))	
		BD.2	BE.2
	ENGINE—*continued*		
E.17	Remove and refit one pair of connecting rod bearings	1	1
E.18	Extra per pair of connecting rod bearings	¼	¼
E.19	Remove and refit oil pump	1	1
E.20	Remove and refit manifold	1¾	1¾
E.21	Remove and refit cylinder side cover	2¼	2¼
E.22	Remove and refit set of tappets	4½	4½
E.23	Remove and refit radiator	1¼	1¼
E.24	Remove and refit crankcase front cover, replacing felt seal and joint washer	3	3
E.25	Remove and refit timing chain, camshaft and crankshaft gears	3½	3½
E.26	Remove and refit top water hose	¼	¼
E.27	Remove and refit bottom water hose	½	½
E.28	Remove and refit thermostat	¾	¾
E.29	Remove and refit water pump	1½	1½
E.20	Remove, overhaul and refit water pump	2¼	2¼
E.31	Remove and refit flywheel	6	6
E.32	Remove and refit crankshaft starting nut and/or pulley	2	2
E.33	Remove and refit fan belt	¼	¼
E.34	Adjust fan belt	10 m.	10 m.
E.35	Remove and refit air cleaner, including cleaning	1	1
E.36	Change air filter element	½	½
	GEARBOX		
G.1	Remove and refit gearbox assembly	5½	5
G.2	Remove and refit change speed control mechanism	1¾	1¾
G.3	Overhaul change speed control mechanism	2	2
G.4	Adjust gear selector cable	½	½
G.5	Remove and refit gearbox front cover, including joint washer	5¾	5¼
G.6	Remove and refit gearbox rear cover, including fitting joint washer and oil seal	5¾	5¾

SCHEDULE OF OPERATIONAL TIMES—A 90—*continued*

Operation Number	Description of Operation	Time cycle (hours: minutes (m))	
		BD.2	BE.2
	CLUTCH		
C.1	Remove and refit clutch assembly	5¾	5¼
	PROPELLER SHAFT		
P.1	Remove and refit propeller shaft	1¼	1¼
	REAR AXLE		
R.A.1	Remove and refit rear axle complete, including adjusting brakes and bleeding as necessary	3½	3¾
R.A.2	Remove and refit gear carrier assembly	1¾	1¾
R.A.3	Fit new axle shaft joint washer	¼	¼
R.A.4	Remove and refit hub bearings, one pair only . . .	1	1
R.A.5	Remove and refit hub oil seal, one side only . . .	¾	¾
R.A.6	Remove and refit pinion oil seal	1	1
	FRONT SUSPENSION		
F.S.1	Remove and refit front suspension unit complete, one side only, includes bleeding and adjusting brakes and adjusting track	2	2
F.S.2	Remove, overhaul and refit front suspension unit . .	5	5
F.S.3	Remove and refit shock absorber, one side only . .	1¼	1¼
F.S.4	Remove and refit hub bearings, one side only . . .	1	1
F.S.5	Remove and refit hub oil seal, one side only . . .	1	1
F.S.6	Remove and refit brake shoes, one side only . . .	½	½
F.S.7	Remove and refit coil spring, one side only . . .	¾	¾
	STEERING		
S.1	Remove and refit trafficator and horn switch . . .	¾	¾
S.2	Remove and refit steering wheel	1	1
S.3	Remove and refit steering assembly (includes operations S.1, S.2 and S.11, also change speed controls as necessary)	4	4
S.4	Remove and refit steering cross tube	½	½
S.5	Remove and refit steering side tube, one side only .	½	½

SCHEDULE OF OPERATIONAL TIMES—A 90—*continued*

Operation Number	Description of Operation	Time cycle (hours: minutes (m))	
		BD.2	BE.2
	STEERING—*continued*		
S.6	Remove and refit steering idler and adjust	1¼	1¼
S.7	Replace one pair of cross and/or side tube ends after removal	¼	¼
S.8	Remove and refit drop arm	½	½
S.9	Check camber	10 m.	10 m.
S.10	Check track	10 m.	10 m.
S.11	Adjust track	¼	¼
	ELECTRICAL EQUIPMENT AND INSTRUMENTS		
E.E.1	Dynamo, remove and refit	¾	¾
E.E.2	Starter, remove and refit	¾	¾
E.E.3	Coil, remove and refit	¼	¼
E.E.4	Distributor, remove and refit	½	½
E.E.5	H.T. leads, remove and fit new set	¼	¼
E.E.6	Ignition warning light bulb, remove and refit	5 m.	5 m.
E.E.7	Headlamp complete, remove and refit	1¼	1¼
E.E.8	Headlamp light unit and/or bulb, remove and refit	½	½
E.E.9	Side lamp complete, remove and refit	1	1
E.E.10	Side lamp bulb, remove and refit	5 m.	5 m.
E.E.11	Fog lamp, remove and refit	1	1
E.E.12	Side lamp glass, remove and refit	5 m.	5 m.
E.E.13	Tail and stop lamp, remove and refit, one side only	½	½
E.E.14	Rear number plate lamp, remove and refit	½	½
E.E.15	Tail and stop lamp glass, remove and refit, one side only	—	—
E.E.16	Ignition and lighting switch, remove and refit	1½	1½
E.E.17	Starter switch, remove and refit	1½	1½
E.E.18	Panel light switch, remove and refit	1½	1½
E.E.19	Screen wiper switch, remove and refit	1½	1½
E.E.20	Screen wiper motor, remove and refit	1½	1½
E.E.21	Screen wiper drive cable, remove and refit	2	2
E.E.22	Screen wiper blade, remove and refit.	5 m.	5 m.

SCHEDULE OF OPERATIONAL TIMES—A 90—*continued*

Operation Number	Description of Operation	Time cycle (hours: minutes (m))	
		BD.2	BE.2
	ELECTRICAL EQUIPMENT AND INSTRUMENTS—*continued*		
E.E.23	Trafficator, remove and refit, one side only	1	1
E.E.24	Horn, remove and refit, one side only	¾	¼
E.E.25	Control unit, remove and refit	1½	1½
E.E.26	Battery, remove and refit, including cleaning tray	1	1
E.E.27	Petrol gauge, facia unit, remove and refit	1¼	1¼
E.E.28	Petrol gauge, tank unit, remove and refit (does not include Operation C.H.10)	½	½
E.E.29	Speedometer head, remove and refit	1¼	1¼
E.E.30	Speedometer drive cable, remove and refit	½	½
E.E.31	Heater unit, remove and refit	1½	1½
E.E.32	Oil pressure gauge, remove and refit	1¼	1¼
E.E.33	Ammeter, remove and refit	1¼	1¼
E.E.34	Radiator thermometer gauge, remove and refit	2	2
E.E.35	Remove and refit interior roof light, one only	—	½
E.E.36	Remove and refit dip switch	¾	¾
	BRAKES AND CONTROLS		
B.1	Dismantle and overhaul brakes, including wheel cylinders, expander boxes where applicable, fitting exchange shoes, bleeding and adjusting	5	5
B.2	Remove road wheels, brake drums, clean out dust from shoes and mechanism, refit, bleed and adjust	2¼	2¼
B.3	Adjust brakes, including bleeding as necessary	1	1
B.4	Remove and refit master cylinder	2	2
B.5	Remove and refit one brake hose	1¼	1¼
B.6	Remove and refit handbrake cable	¾	¾
B.7	Remove and refit stop light switch	¾	¾
	CHASSIS		
C.H.1	Remove and refit rear road spring, one side	1¼	1¼
C.H.2	Fit new spring bushes, one side	1¾	1¾

SCHEDULE OF OPERATIONAL TIMES—A 90—*continued*

Operation Number	Description of Operation	Time cycle (hours: minutes (m)) BD.2	BE.2
	CHASSIS—*continued*		
C.H.3	Remove and refit rear shock absorber, each	1	1
C.H.4	Drain and refill shock absorber, each (does not include include Operations F.S.3 or C.H.3)	¼	¼
C.H.5	Remove and refit anti-roll bar	½	½
C.H.6	Remove and refit exhaust system complete	1¾	1¼
C.H.7	Remove and refit exhaust down pipe	1¾	1¼
C.H.8	Remove and refit exhaust silencer	1¼	¾
C.H.9	Remove and refit exhaust tail pipe—where separate pipe is fitted	½	½
C.H.10	Remove and refit petrol tank	1½	1½
C.H.11	Remove and refit petrol pipe, tank to pump	½	½
C.H.12	Remove and refit petrol pipe, pump to carburetter	¾	¾
C.H.13	Remove and refit flexible petrol pipe.	¾	¾
	BODY MOUNTINGS		
B.M.1	Remove and refit bonnet	½	½
B.M.2	Remove and refit bonnet lock	20 m.	20 m.
B.M.3	Remove and refit apron grille	1	1
B.M.4	Remove and refit front wing, outer section, one side only	3	3
B.M.5	Remove and refit front bumper assembly	1½	1½
B.M.6	Remove and refit one front bumper outer section	½	½
B.M.7	Remove and refit front bumper inner section	50 m.	50 m.
B.M.8	Remove and refit rear bumper assembly.	1½	1½
B.M.9	Remove and refit one rear bumper outer section	½	½
B.M.10	Remove and refit rear bumper centre section	50 m.	50 m.
B.M.11	Remove and refit overider, each	¼	¼
	BODY FITTINGS		
B.F.1	Remove, refit and re-hang door complete, each (manual operated)	2½	2½

SCHEDULE OF OPERATIONAL TIMES—A 90—*continued*

Operation Number	Description of Operation	Time cycle (hours : minutes (m))	
		BD.2,	BE.3,
	BODY FITTINGS—*continued*		
B.F.2	Remove, refit and re-hang door complete, each (power operated)	3½	—
B.F.3	Remove and refit door lock mechanism, each	2	2
B.F.4	Remove and refit door window mechanism, each (manual)	2	2
B.F.5	Remove and refit door window mechanism, each (power operated)	2½	—
B.F.6	Remove and refit door glass, each	3	3
B.F.7	Remove and refit door ventilating window, each	2½	2½
B.F.8	Remove and refit outside door handle, each	½	½
B.F.9	Remove and refit window winder handle, each (manual)	¼	¼
B.F.10	Remove and refit windscreen complete	6	6
B.F.11	Fit new centre glass to windscreen frame after removal	1	1
B.F.12	Fit one new quarter glass to windscreen frame after removal	1	1
B.F.13	Remove and refit rear light complete	—	7½
B.F.4	Remove and refit quarter light assembly	—	¾
B.F.15	Remove and refit rear boot lid	20 m.	20 m.
B.F.16	Remove and refit rear boot lid hinge mechanism	½	½
B.F.17	Remove and refit rear boot lid locking bar mechanism	½	½
B.F.18	Fit new weatherstrip to rear boot	1	1
B.F.19	Remove and refit front seat complete, each	¼	¼
B.F.20	Remove and refit rear seat squab	½	½
B.F.21	Remove and refit chrome strip, door top, each	3	3
B.F.22	Remove and refit chrome mould, door bottom, each	½	½
B.F.23	Remove and refit chrome mould, front wing valance, each	1	1
B.F.24	Remove and refit chrome mould, rear wing cover, each	½	½
B.F.25	Remove and refit chrome scroll assembly and moulding bonnet	2	2
B.F.26	Remove and refit chrome scroll assembly and moulding rear boot lid	2	2

SCHEDULE OF OPERATIONAL TIMES

(INCLUDING ROAD TEST)

A 125, A 135

Operation Number	Description of Operation	Time cycle (hours: minutes (m))	
		A 125	A 135
		DS.1, DM.1	DS.2, DS.3, DM.2, DM.3
	ENGINE		
E.1	Remove and refit engine assembly, including all relevant operations, and road test	10½	10½
E.2	Remove engine assembly and fit replacement, changing over ancillary equipment, including cleaning and checking petrol pump, carburetter, distributor and air cleaner, and road test	12	12
E.2A	Clean and check dynamo and starter	1½	1½
E.3	Remove cylinder head and oil reservoir, draw pistons, measure cylinder bores, fit new set of pistons, check connecting rod alignment and re-assemble. (Does not include Operation E.10)	9	9
E.4	Remove cylinder head and oil reservoir, draw pistons, measure cylinder bores, fit set of new rings, check connecting rod alignment and re-assemble. (Does not include Operation E.10)	8	8
E.5	Remove and refit rocker cover	½	½
E.6	Remove and refit rocker shaft	2	2
E.7	Overhaul rocker shaft	1¾	1¾
E.8	Adjust tappets	1	1
E.9	Remove and refit cylinder head and/or gasket . . .	4	4
E.10	Tune up engine, including adjusting tappets, cleaning and adjusting sparking plugs, overhauling distributor, cleaning and adjusting carburetter, cleaning petrol pump, cleaning and oiling air cleaner and adjusting ignition timing	5	5
E.11	Decarbonize and grind-in valves including facing valves and seats, tune engine and road test . . .	10	10
E.12	Remove and refit cylinder head and change one valve	4½	4½

SCHEDULE OF OPERATIONAL TIMES—A 125, A 135—*continued*

Operation Number	Description of Operation	Time cycle (hours: minutes (m))	
		A 125	A 135
		DS.1, DM.1	DS.2, DS.3, DM.2, DM.3
	ENGINE—*continued*		
E.13	Extra per valve	¼	¼
E.14	Remove and refit one valve spring	1	1
E.15	Extra per spring	¼	¼
E.16	Remove, clean and refit oil reservoir	1¾	1¾
E.17	Remove and refit one pair of connecting rod bearings	2	2
E.18	Extra per pair of connecting rod bearings	¼	¼
E.19	Remove and refit oil pump	2	2
E.20	Remove and refit manifold and/or joint washer	1¾	1¾
E.21	Remove and refit cylinder side cover	2¼	2¼
E.22	Remove and refit set of tappets	5	5
E.23	Remove and refit radiator	3	3
E.24	Remove and refit crankcase front cover, replacing felt seal and joint washer	4	4
E.25	Remove and refit timing chain, camshaft and crankshaft gears	4½	4½
E.26	Remove and refit top water hose	¼	¼
E.27	Remove and refit bottom water hose	½	½
E.28	Remove and refit thermostat	½	½
E.29	Remove and refit water pump	2½	2½
E.30	Remove, overhaul and refit water pump	3¼	3¼
E.31	Remove and refit flywheel	7	7
E.32	Remove and refit crankshaft starting nut and/or pulley	3½	3½
E.33	Remove and refit fan belt	1¼	1¼
E.34	Adjust fan belt	¼	¼
E.35	Remove and refit air cleaner, including cleaning and lubricating	½	½
E.36	Change oil filter element	½	½
E.37	Remove and refit engine damper	1	1

SCHEDULE OF OPERATIONAL TIMES—A 125, A 135—*continued*

Operation Number	Description of Operation	Time cycle (hours: minutes (m))	
		A 125	A 135
		DS.1, DM.1	DS.2, DS.3, DM.2, DM.3
	GEARBOX		
G.1	Remove and refit gearbox assembly	6	6
G.2	Remove and refit change speed control mechanism	2	2
G.3	Overhaul change speed control mechanism	4	4
G.4	Adjust gear engagement and selector rods	½	½
G.5	Remove and refit gearbox front cover, including joint washer	6¾	6¾
G.6	Remove and refit gearbox rear cover, including fitting joint washer and oil seal	7	7
G.7	Remove and refit reverse light switch	½	½
	CLUTCH		
C.1	Remove and refit clutch assembly	6½	6½
	PROPELLER SHAFT		
P.1	Remove and refit propeller shaft assembly	1½	1½
	REAR AXLE		
R.A.1	Remove and refit rear axle complete, including bleeding and adjusting brakes and bleeding Jackall system	5	5
R.A.2	Remove and refit rear hub bearings including shimming as necessary, one side only	4	4
R.A.3	Remove and refit rear hub and axle shaft oil seals, one side only	3	3
R.A.4	Remove and refit pinion oil seal assembly	1	1
	FRONT SUSPENSION		
F.S.1	Remove and refit front suspension unit complete, one side only includes bleeding and adjusting brakes	3	3
F.S.2	Remove, overhaul and refit front suspension unit	5	5
F.S.3	Remove and refit shock absorber—one side only	1½	1½

SCHEDULE OF OPERATIONAL TIMES—A 125, A 135—*continued*

Operation Number	Description of Operation	Time cycle (hours: minutes (m))	
		A 125	A 135
		DS.1, DM.1	DS.2, DS.3, DM.2, DM.3
	FRONT SUSPENSION—*continued*		
F.S.4	Remove and refit hub bearings, one side only	1½	1½
F.S.5	Remove and refit hub oil seal, one side only	1¼	1¼
F.S.6	Remove and refit brake shoes, one side only	¾	¾
F.S.7	Remove and refit coil spring, one side only	1	1
	STEERING		
S.1	Remove and refit trafficator and horn switch	¾	¾
S.2	Remove and refit steering wheel	1	1
S.3	Remove and refit steering assembly	5	5
S.4	Remove and refit central steering lever with bracket	2	2
S.5	Replace one pair of cross and/or side tube ends after removal	½	½
S.6	Remove and refit drop arm	1	1
S.7	Check camber	¼	¼
S.8	Check track	10 m.	10 m.
S.9	Adjust track	¼	¼
	ELECTRICAL EQUIPMENT AND INSTRUMENTS		
E.E.1	Dynamo, remove and refit	¾	¾
E.E.2	Starter, remove and refit	½	½
E.E.3	Coil, remove and refit	¼	¼
E.E.4	Distributor, remove and refit	½	½
E.E.5	H.T. Leads, remove and refit new set	20 m.	20 m.
E.E.6	Ignition warning light bulb, remove and refit	5 m.	5 m.
E.E.7	Headlamp complete, remove and refit	1	1
E.E.8	Headlamp unit and/or bulb, remove and refit	5 m.	10 m.
E.E.9	Side lamp complete, remove and refit	¼	¼
E.E.10	Side lamp bulb, remove and refit	5 m.	5 m.
E.E.11	Side lamp glass, remove and refit	½	5 m.

SCHEDULE OF OPERATIONAL TIMES—A 125, A 135—*continued*

Operation Number	Description of Operation	Time cycle (hours: minutes (m))	
		A 125	A 135
		DS.1, DM.1	DS.2, DS.3, DM.2, DM.3
	ELECTRICAL EQUIPMENT AND INSTRUMENTS—*continued*		
E.E.12	Headlamp glass, remove and refit	1	—
E.E.13	Tail and stop lamps, remove and refit	¼	¼
E.E.14	Ignition switch, remove and refit	½	½
E.E.15	Starter switch, remove and refit	½	½
E.E.16	Panel light switch, remove and refit	½	½
E.E.17	Screen wiper switch, remove and refit	1	1
E.E.18	Screen wiper blade, remove and refit	5 m.	5 m.
E.E.19	Trafficator, remove and refit, one side only	¾	1
E.E.20	Horn, remove and refit	¼	¼
E.E.21	Horn ring, remove and refit	½	½
E.E.22	Batteries, remove and refit	½	½
E.E.23	Petrol gauge, remove and refit	½	½
E.E.24	Petrol gauge tank unit, remove and refit	1	1
E.E.25	Speedometer head, remove and refit	½	½
E.E.26	Speedometer drive cable, remove and refit	¾	¾
E.E.27	Heater unit, remove and refit	1¼	1¼
E.E.28	Ammeter, remove and refit	½	½
E.E.29	Remove and refit clock	½	½
E.E.30	Remove and refit oil gauge and temperature gauge	1	1
E.E.31	Remove and refit instrument panel, centre section	10 m.	10 m.
B.1	Dismantle and overhaul brakes—including wheel cylinders, fitting exchange shoes, bleeding and adjusting	6½	6½
B.2	Remove road wheels, brake drums, clean out dust from shoes and mechanism, refit, bleed and adjust	2	2
B.3	Adjust brakes, including bleeding as necessary	½	½

SCHEDULE OF OPERATIONAL TIMES—A 125, A 135—*continued*

Operation Number	Description of Operation	Time cycle (hours: minutes (m))	
		A 125	A 135
		DS.1, DM.1	DS.2, DS.3, DM.2, DM.3
	BRAKES AND CONTROLS—*continued*		
B.4	Remove and refit master cylinder	1½	1½
B.5	Remove and refit one brake hose.	¾	¾
B.6	Remove and refit handbrake cable	½	½
B.7	Remove and refit stop light switch	¾	¾
B.8	Remove shoes and fit exchange set, one wheel only	1	1
	CHASSIS		
C.H.1	Remove and refit rear road spring, one side	2	2
C.H.2	Fit new spring bushes, one side	2½	2½
C.H.3	Remove and refit rear shock absorber, each	1½	1½
C.H.4	Remove and refit stabiliser bar	1½	1½
C.H.5	Remove and refit exhaust system complete	2	3
C.H.6	Remove and refit exhaust down pipe	1	1¼
C.H.7	Remove and refit exhaust silencer	¾	1¼
C.H.8	Remove and refit petrol tank	2	2
C.H.9	Remove and refit petrol pipe—tank to union	½	½
C.H.10	Remove and refit petrol pipe—pump to carburetter	10 m.	10 m.
C.H.11	Remove and refit flexible petrol pipe	10 m.	10 m.
	BODY MOUNTINGS		
B.M.1	Remove and refit bonnet assembly	¾	¾
B.M.2	Remove and refit bonnet lock, each	½	½
B.M.3	Remove and refit radiator cowl	3½	3½
B.M.4	Remove and refit front wing, each	3½	4
B.M.5	Remove and refit rear wing, each	2	—
B.M.6	Remove and refit front bumper assembly	1	1
B.M.7	Remove and refit rear bumper assembly	1	1
B.M.8	Remove and refit overider, each	¼	¼

SCHEDULE OF OPERATIONAL TIMES—A 125, A 135—*continued*

Operation Number	Description of Operation	Time cycle (hours: minutes (m))	
		A 125	A 135
		DS.1, DM.1	DS.2, DS.3, DM.2, DM.3
B.F.1	Remove, refit and rehang front door complete, each	2½	3½
B.F.2	Remove, refit front door private lock	2	2
B.F.3	Remove and refit front door window mechanism, each	1½	2
B.F.4	Remove and refit front glass, each	2½	2½
B.F.5	Remove and refit front louvre	2½	2½
B.F.6	Remove, refit and rehang rear door complete, each	2½	3½
B.F.7	Remove and refit outside door handle, each	1½	1½
B.F.8	Remove and refit inside door handle, each	¼	¼
B.F.9	Remove and refit window winder handle	¼	¼
B.F.10	Remove and refit windscreen complete	4½	5
B.F.11	Remove and refit rear light complete	6	2
B.F.12	Remove and refit boot lid	2½	2½
B.F.13	Remove and refit weatherstrip	1	1
B.F.14	Remove and refit front seat complete (1-piece type)	1½	—
B.F.15	Remove and refit rear seat squab	2	2½
B.F.16	Remove and refit front seat bucket type, one	½	½
B.F.17	Remove and refit front door moulding, chromium strip	2½	2½
B.F.18	Remove and refit rear door moulding, chromium strip	2½	2½
B.F.19	Remove and refit sliding roof assembly	1½	1½
B.F.20	Remove and refit window moulding, front door	1½	2
B.F.21	Remove and refit window moulding, rear door	1½	2
B.F.22	Remove and refit garnish moulding, front door	1	—
B.F.23	Remove and refit garnish moulding, rear door	1	—

PRE-DELIVERY CHECK

A 40, A 70

Recent investigations of noise or vibration on "Somerset" and "Hereford" cars have shown that the exhaust system has been distorted after vehicle assembly, either during shipment overseas or transportation by road.

During handling there is a possibility of the exhaust tail pipe being subjected to undue pressure, which in turn distorts the support bracket of the rear mounting, thus causing the tail pipe to be permanently deflected from its correct position and so make contact with the chassis frame at the point where it passes through it.

Therefore, during Pre-Delivery Checks the mountings and disposition of the exhaust system should always be examined and rectified when necessary.

FOR YOUR RECORDS	PARTS LISTS
	STOCK CARDS
	PARTS ORDERED
	ALTERATIONS NOTED

RECOMMENDED LUBRICANTS
1954

Since the publication of Recommended Lubricants (see this Journal, Vol. 23, section "Repairs Data", pages 7–13) certain changes have occurred necessitating this reprinted revised list.

A 40, A 70, AUSTIN-HEALEY 100 — **HOME MARKET**

		Duckham's	Vacuum	Shell	Wakefield	Esso	B.P.
Engine	**Summer**	Duckham's "Nol Thirty"	Mobiloil A	Shell X-100. 30	Castrol XL	Essolube 30	Energol S.A.E. 30
	Winter	Duckham's "Nol Twenty"	Mobiloil Arctic	Shell X-100. 20	Castrolite	Essolube 20	Energol S.A.E. 20W
Gearbox	**A40, A70**	Duckham's "Nol Forty"	Mobiloil B.B.	Shell X-100. 40	Castrol XXL	Essolube 40	Energol S.A.E. 40
	Austin-Healey 100	Duckham's "Nol Thirty"	Mobiloil A	Shell X-100. 30	Castrol XL	Essolube 30	Energol S.A.E. 30
Rear Axle, Steering Box and Oil Nipples		Duckham's Nol E.P.T. 140	Mobilube GX 140	Shell Spirax 140 E.P.	Castrol Hi-Press	Esso Expee Compound 140	Energol E.P. S.A.E. 140
Front Wheel Hubs		Duckham's H.B.B. Grease	Mobil Hub Grease	Shell Retinax A	Castrolease Heavy	Esso Grease	Energrease C 3
Distributor and Oil Can		Duckham's "Nol Twenty"	Mobil Handy Oil	Shell X-100. 20	Wakefield Oilit	Esso Handy Oil	Energol S.A.E. 20W
Upper Cylinder Lubrication		Duckham's Adcoids	Mobil Upperlube	Shell Donax U	Wakefield Castrollo	Essomix	Energol U.C.L.
Rear Road Springs (A 40)		Duckham's Laminoid Liquid	Mobil Spring Oil	Shell Donax P	Castrol Penetrating Oil	Esso Penetrating Oil	Energol Penetrating Oil

Hydraulic Brakes: Use Girling Brake Fluid (crimson) only.
Shock Absorbers: Use Armstrong's Super (thin) Shock Absorber Oil.

A 40, A 70, AUSTIN-HEALEY 100

OVERSEAS MARKETS

		Duckham's	Vacuum	Shell	Wakefield	Esso	B.P.
*Engine	From 90° F. down to 32° F.	Duckham's "Nol Thirty"	Mobiloil A	Shell X-100. 30	Castrol XL	Essolube 30	Energol Motor Oil S.A.E. 30
	32° F. down to 10° F.	Duckham's "Nol Twenty"	Mobiloil Arctic	Shell X-100. 20	Castrolite	Essolube 20	Energol Motor Oil S.A.E. 20W
	Below 10° F.	Duckham's "Nol Ten"	Mobiloil 10W	Shell X-100. 10W	Castrol Z	Essolube 10	Energol Motor Oil S.A.E. 10W
†Trans-mission	A40, A70	Duckham's CG 90	Mobilube C 90	Shell Dentax 90	Castrol ST	Esso Gear Oil S.A.E. 90	Energol Transmission Oil S.A.E. 90
	Austin-Healey 100	Duckham's "Nol Thirty"	Mobiloil A	Shell X-100. 30	Castrol XL	Essolube 30	Energol Motor Oil S.A.E. 30
‡Rear Axle	Down to 32° F.	Duckham's Nol E.P.T. 140	Mobilube GX 140	Shell Spirax 140 E.P.	Castrol Hi-Press	Esso XP Compound S.A.E. 140	Energol Transmission Oil E.P. S.A.E. 140
	32° F. to 10° F.	Duckham's Nol E.P.T. 90	Mobilube GX 90	Shell Spirax 90 E.P.	Castrol Hypoy	Esso XP Compound S.A.E. 90	Energol Transmission Oil E.P. S.A.E. 90
‡Steering Box and **Oil Nipples		Duckham's Nol E.P.T. 140	Mobilube GX 140	Shell Spirax 140 E.P.	Castrol Hi-Press	Esso XP Compound S.A.E. 140	Energol Transmission Oil E.P. S.A.E. 140
Front Wheel Hubs		Duckham's H.B.B. Grease	Mobil Hub Grease	Shell Retinax A	Castrolease Heavy	Esso Bearing Grease	Energrease C 3
Distributor and Oil Can		Duckham's "Nol Twenty"	Mobil Handy Oil	Shell X-100. 20	Wakefield Oilit	Esso Handy Oil	Energol Motor Oil S.A.E. 20W
Upper Cylinder Lubrication		Duckham's Adcoids	Mobil Upperlube	Shell Donax U	Wakefield Castrollo	Esso Upper Motor Lubricant	Energol U.C.L.

A 40, A 70, AUSTIN-HEALEY 100

OVERSEAS MARKETS—*continued*

	Duckham's	Vacuum	Shell	Wakefield	Esso	B.P.
Rear Road Springs (A 40)	Duckham's Laminoid Liquid	Mobil Spring Oil	Shell Donax P	Castrol Penetrating Oil	Esso Penetrating Oil	Energol Penetrating Oil

***Engine:** Above 90° F. or for high speed driving at high temperatures use next heavier grade of oil.
†**Transmission:** For prevailing sub-zero (F. °) temperatures use S.A.E. 80 lubricant (A40, A70) and S.A.E. 20 (Austin-Healey 100).
‡**Rear Axle and Steering:** For prevailing sub-zero (F. °) temperatures use S.A.E. 80 E.P. lubricant.
****Oil Nipples:** For high temperature climates the grease as shown for hubs can be used.
Use only the best standard fluids for hydraulic brakes and shock absorbers.

16-H.P. TAXI AND HIRE-CAR

HOME MARKET

		Duckham's	Mobiloil A	Shell X-100. 30	Castrol XL	Essolube 30	Energol S.A.E. 30
Engine	**Summer**						
	Winter	Duckham's "Nol Twenty"	Mobiloil Arctic	Shell X-100. 20	Castrolite	Essolube 20	Energol S.A.E. 20W
Gearbox		Duckham's "Nol Forty"	Mobiloil B.B.	Shell X-100. 40	Castrol XXL	Essolube 40	Energol S.A.E. 40
Rear Axle		Duckham's R	Mobiloil R	Shell Super Heavy	Castrol R	Esso T.S.D. 533	Energol Racing Oil
Steering Box and Oil Nipples		Duckham's Nol E.P.T. 140	Mobilube GX 140	Shell Spirax 140 E.P.	Castrol Hi-Press	Esso Expee Compound 140	Energol E.P. S.A.E. 140
Wheel Hubs		Duckham's H.B.B. Grease	Mobil Hub Grease	Shell Retinax A	Castrolease Heavy	Esso Grease	Energrease C 3
Distributor and Oil Can		Duckham's "Nol Twenty"	Mobil Handy Oil	Shell X-100. 20	Wakefield Oilit	Esso Handy Oil	Energol S.A.E. 20W

16-H.P. TAXI AND HIRE-CAR

HOME MARKET—*continued*

	Duckham's	Vacuum	Shell	Wakefield	Esso	B.P.
Upper Cylinder Lubrication	Duckham's Adcoids	Mobil Upperlube	Shell Donax U	Wakefield Castrollo	Essomix	Energol U.C.L.
Road Springs	Duckham's Laminoid Liquid	Mobil Spring Oil	Shell Donax P	Castrol Penetrating Oil	Esso Penetrating Oil	Energol Penetrating Oil
Shock Absorbers: Use Armstrong's Super (thin) Shock Absorber Oil. **Jacking System:** Use Smith's "Red Jackall" Fluid.						

16-H.P. TAXI AND HIRE-CAR

OVERSEAS MARKETS

***Engine**	From 90° F. down to 32° F.	Duckham's "Nol Thirty"	Mobiloil A	Shell X-100. 30	Castrol XL	Essolube 30	Energol Motor Oil S.A.E. 30
	32° F. down to 10° F.	Duckham's "Nol Twenty"	Mobiloil Arctic	Shell X-100. 20	Castrolite	Essolube 20	Energol Motor Oil S.A.E. 20W
	Below 10° F.	Duckham's "Nol Ten"	Mobiloil 10W	Shell X-100. 10W	Castrol Z	Essolube 10	Energol Motor Oil S.A.E. 10W
†Transmission		Duckham's CG 90	Mobilube C 90	Shell Dentax 90	Castrol ST	Esso Gear Oil S.A.E. 90	Energol Transmission Oil S.A.E. 90
Rear Axle		Duckham's R	Mobiloil R	Shell Super Heavy	Castrol R	Esso T.S.D. 533	Energol Racing Oil
‡Steering Box and **Oil Nipples		Duckham's Nol E.P.T. 140	Mobilube GX 140	Shell Spirax 140 E.P.	Castrol Hi-Press	Esso XP Compound S.A.E. 140	Energol Transmission Oil E.P. S.A.E. 140
Wheel Hubs		Duckham's H.B.B. Grease	Mobil Hub Grease	Shell Retinax A	Castrolease Heavy	Esso Bearing Grease	Energrease C 3

16-H.P. TAXI AND HIRE-CAR

OVERSEAS MARKETS—*continued*

	Duckhams	Vacuum	Shell	Wakefield	Esso	B.P.
Distributor and Oil Can	Duckham's "Nol Twenty"	Mobil Handy Oil	Shell X-100. 20	Wakefield Oilit	Esso Handy Oil	Energol Motor Oil S.A.E. 20W
Upper Cylinder Lubrication	Duckham's Adcoids	Mobil Upperlube	Shell Donax U	Wakefield Castrollo	Esso Upper Motor Lubricant	Energol U.C.L.
Road Springs	Duckham's Laminoid Liquid	Mobil Spring Oil	Shell Donax P	Castrol Penetrating Oil	Esso Penetrating Oil	Energol Penetrating Oil

*__Engine:__ Above 90° F. or for high speed driving at high temperatures use next heavier grade of oil.
†__Transmission:__ For prevailing sub-zero (F. °) temperatures use S.A.E. 80 lubricant.
‡__Steering:__ For prevailing sub-zero (F. °) temperatures use S.A.E. 80 E.P. lubricant.
**__Oil Nipples:__ For high temperature climates the grease as shown for hubs can be used.
Use only the best standard fluids for the hydraulic brakes, shock absorbers and jacking system.

A 30, A 125 and A 135

HOME MARKET

		Duckham's	Mobiloil A	Shell X-100. 30	Castrol XL	Essolube 30	Energol S.A.E. 30
Engine	**Summer**						
	Winter	Duckham's "Nol Twenty"	Mobiloil Arctic	Shell X-100. 20	Castrolite	Essolube 20	Energol S.A.E. 20W
Gearbox		Duckham's "Nol Forty"	Mobiloil B.B.	Shell X-100. 40	Castrol XXL	Essolube 40	Energol S.A.E. 40
Rear Axle		Duckham's Hypoid 90	Mobilube GX 90	Shell Spirax 90 E.P.	Castrol Hypoy	Esso Expee Compound 90	Energol E.P. S.A.E. 90
Steering Box, Rear Road Springs (A 125, A 135), and Oil Nipples		Duckham's Nol E.P.T. 140	Mobilube GX 140	Shell Spirax 140 E.P.	Castrol Hi-Press	Esso Expee Compound 140	Energol E.P. S.A.E. 140

A 30, A 125 and A 135

HOME MARKET—*continued*

	Duckham's	Vacuum	Shell	Wakefield	Esso	B.P.
Wheel Hubs	Duckham's H.B.B. Grease	Mobil Hub Grease	Shell Retinax A	Castrolease Heavy	Esso Grease	Energrease C 3
Distributor and Oil Can	Duckham's "Nol Twenty"	Mobil Handy Oil	Shell X-100. 20	Wakefield Oilit	Esso Handy Oil	Energol S.A.E. 20W
Upper Cylinder Lubrication	Duckham's Adcoids	Mobil Upperlube	Shell Donax U	Wakefield Castrollo	Essomix	Energol U.C.L.
Rear Road Springs (A 30)	Duckham's Laminoid Liquid	Mobil Spring Oil	Shell Donax P	Castrol Penetrating Oil	Esso Penetrating Oil	Energol Penetrating Oil

Hydraulic Brakes: Use Lockheed Brake Fluid only.
Shock Absorbers: Use Armstrong's Super (thin) Shock Absorber Oil.
Jacking System: Use Smith's "Red Jackall" Fluid (A 125 and A 135 only).

A 30, A 125 and A 135

OVERSEAS MARKETS

*Engine	From 90° F. down to 32° F.	Duckham's "Nol Thirty"	Mobiloil A	Shell X-100. 30	Castrol XL	Essolube 30	Energol Motor Oil S.A.E. 30
	32° F. down to 10° F.	Duckham's "Nol Twenty"	Mobiloil Arctic	Shell X-100. 20	Castrolite	Essolube 20	Energol Motor Oil S.A.E. 20W
	Below 10° F.	Duckham's "Nol Ten"	Mobiloil 10W	Shell X-100. 10W	Castrol Z	Essolube 10	Energol Motor Oil S.A.E. 10W
†Transmission		Duckham's CG 90	Mobilube C 90	Shell Dentax 90	Castrol ST	Esso Gear Oil S.A.E. 90	Energol Transmission Oil S.A.E. 90

	Duckham's	Vacuum	Shell	Wakefield	Esso	B.P.
‡Rear Axle	Duckham's Hypoid 90	Mobilube GX 90	Shell Spirax 90 E.P.	Castrol Hypoy	Esso XP Compound S.A.E. 90	Energol Transmission Oil E.P. S.A.E. 90
**Steering Box and ††Oil Nipples Rear Road Springs (A 125, A 135)	Duckham's Nol E.P.T. 140	Mobilube GX 140	Shell Spirax 140 E.P.	Castrol Hi-Press	Esso XP Compound S.A.E. 140	Energol Transmission Oil E.P. S.A.E. 140
Wheel Hubs	Duckham's H.B.B. Grease	Mobil Hub Grease	Shell Retinax A	Castrolease Heavy	Esso Bearing Grease	Energrease C 3
Distributor and Oil Can	Duckham's "Nol Twenty"	Mobil Handy Oil	Shell X-100. 20	Wakefield Oilit	Esso Handy Oil	Energol Motor Oil S.A.E. 20W
Upper Cylinder Lubrication	Duckham's Adcoids	Mobil Upperlube	Shell Donax U	Wakefield Castrollo	Esso Upper Motor Lubricant	Energol U.C.L.
Rear Road Springs (A 30)	Duckham's Laminoid Liquid	Mobil Spring Oil	Shell Donax P	Castrol Penetrating Oil	Esso Penetrating Oil	Energol Penetrating Oil

*Engine: Above 90° F. or for high speed driving at high temperatures use next heavier grade of oil.
†Transmission: For prevailing sub-zero (F. °) temperatures use S.A.E. 80 lubricant.
‡Rear Axle: For prevailing sub-zero (F. °) temperatures use S.A.E. 80 Hypoid lubricant.
**Steering: For prevailing sub-zero (F. °) temperatures use S.A.E. 80 E.P. lubricant.
††Oil Nipples: For high temperature climates the grease as shown for hubs can be used.
Use only the best standard fluids for the hydraulic brakes, shock absorbers and jacking system (A 125 and A 135 only).

ENGINE—CUTTING-OUT

A 30

Upon investigating some recent reports of the A 30 engine cutting-out, the cause has been attributed to any of the following possibilities. Therefore, it is suggested that these should be examined first before proceeding further.

1. The vent holes on the inside of the petrol tank filler cap may be choked, thus causing an air lock as the level of the petrol falls. These vent holes should be cleared of foreign matter, and, as a further safeguard against an air lock, slightly increased in diameter to improve the breathing of the petrol tank.
2. After establishing that the petrol tank is breathing correctly, and the engine still cuts out, then the cause may be due to lack of petrol in the carburetter: under certain climatic conditions freezing can occur within the inner venturi of the carburetter. To obviate this freezing condition, a set of parts (comprising a redesigned choke tube, nozzle and replacement gasket) should be fitted: they can be obtained by quoting part number P 142. It should be understood, however, that these parts will only be supplied in specific instances of engine cut-out.
3. Furthermore, in isolated cases, the petrol tank drain plug has been found to foul the end of the petrol feed pipe inside the tank, thus restricting the petrol supply to the carburetter. This can be remedied by reducing the depth of the thread on the plug by means of filing or grinding.

FOR YOUR RECORDS	PARTS LISTS
	STOCK CARDS
	PARTS ORDERED
	ALTERATIONS NOTED

Published March 29, 1954

CHASSIS LUBRICATION

It is apparent that some Dealers are still using grease to lubricate chassis components in spite of the fact that it is clearly stated in the recommended list of lubricants published in this Journal, Service Manuals and Handbooks, that oil should be applied to all chassis nipples with the exception of the hubs. Only when a vehicle is operating under tropical conditions should grease be used.

TORQUE WRENCH LOADINGS

A30

Further to the article appearing in this Journal, Volume 23, section "Repairs Data", page 19, the torque necessary for adequately tightening the A30 bridge pipe unions at the front brake cylinders is 5 lb. ft. (·691 kgm.).

When tightening the front shock absorber setscrews as described in this Journal, Volume 24, section "Suspension", page 5, the necessary torque is 40 lb. ft. (5·528 kgm.).

SCHEDULE OF OPERATIONAL TIMES

A 40 (GS. 5), A 50 (HS. 5)

Operation Number	Description of Operation	Time cycle (hours: minutes (m))
	ENGINE	
E.1	Engine assembly, remove and refit, including all relevant operations, and road test	8½
E.2	Engine assembly, remove and fit replacement, changing over ancillary equipment, including cleaning and checking petrol pump, carburetter, distributor and air cleaner, and road test	10
E.3	Engine and gearbox assembly, remove on front suspension cross member and refit	11
E.4	Engine and gearbox assembly, remove through bonnet opening and refit	11
E.5	Dynamo and starter, clean and check	1½
E.6	Cylinder head and oil reservoir, remove—draw pistons, measure cylinder bores, fit new set of pistons, check connecting rod alignment, re-assemble, and road test (does not include E.13)	7
E.7	Cylinder head and oil reservoir, remove—draw pistons, measure cylinder bores, fit new set of rings, check connecting rod alignment, re-assemble, and road test (does not include E.13)	6½
E.8	Rocker cover, remove and refit	¼
E.9	Rocker shaft, remove and refit (includes E.8)	1
E.10	Rocker shaft, overhaul (includes E.9)	2½
E.11	Tappets, adjust (includes E.8)	½
E.12	Cylinder head and/or gasket, remove and refit (includes E.11), and road test	2¾
E.13	Engine, tune up, including adjusting tappets, cleaning and adjusting sparking plugs, overhauling distributor, cleaning and adjusting carburetter, cleaning petrol pump, cleaning and oiling air cleaner, adjusting ignition timing, and road test	3
E.14	Decarbonise, grind-in valves, including facing valves and seats, tune up engine, and road test	7
E.15	Cylinder head, remove and refit, and change one valve	3

Continued

Schedule of Operational Times—A 40/A 50—*continued*

Operation Number	Description of Operation	Time cycle (hours: minutes (m))
	ENGINE—*continued*	
E.16	Valve, each, extra	¼
E.17	Valve spring, one, remove and refit	1
E.18	Valve spring, each, extra	¼
E.19	Oil reservoir, remove, clean and refit	1½
E.20	Connecting rod bearings, remove and refit one pair (includes E.19), and road test	1¾
E.21	Connecting rod bearings, extra per pair	¼
E.22	Oil pump, remove and refit	1¾
E.23	Manifold, remove and refit	1
E.24	Cylinder side cover, remove and refit (includes E.23)	1¼
E.25	Tappets, remove and refit set (includes E.24)	4
E.26	Radiator, remove and refit	1
E.27	Crankcase front cover, remove and refit, replacing felt seal and joint washer (includes E.26)	2½
E.28	Timing chain, camshaft and crankshaft gears, remove and refit (includes E.27), and road test	3¼
E.29	Top water hose, remove and refit	¼
E.30	Bottom water hose, remove and refit	½
E.31	Thermostat, remove and refit	¼
E.32	Water pump, remove and refit	2
E.33	Water pump overhaul (includes E.32)	2¾
E.34	Flywheel, remove and refit (includes G.1)	7
E.35	Crankshaft starting nut and/or pulley, remove and refit	1
E.36	Fan belt, remove and refit	¼
E.37	Fan belt, adjust	10 m.
E.38	Air cleaner, remove and refit, including cleaning and lubricating	¾
E.39	Oil filter, change	½
	GEARBOX	
G.1	Gearbox, remove and refit assembly, includes removing front body mounting bolts and lifting body	6

Continued

Schedule of Operational Times—A 40/A 50—*continued*

Operation Number	Description of Operation	Time cycle (hours: minutes (m))
	GEARBOX—*continued*	
G.2	Gearbox, overhaul and replacement of parts where necessary (includes G.1)	11
G.3	Change speed control mechanism, remove and refit	2
G.4	Gear selector rods, adjust	½
G.5	Gearbox front cover, remove and refit, including joint washer (includes G.1)	6½
G.6	Gearbox rear cover, remove and refit, including joint washer and oil seal (includes G.1)	6½
	CLUTCH	
C.1	Clutch assembly, remove and refit (includes G.1)	6½
	PROPELLER SHAFT	
P.1	Propeller shaft, remove and refit	½
	REAR AXLE	
R.A.1	Rear axle complete, remove and refit, including bleeding and adjusting brakes, and road test	4
R.A.2	Gear carrier assembly, remove and refit, and road test	2
R.A.3	Axle shaft joint washer, fit new	¼
R.A.4	Hub bearing, remove and refit (one side only), and road test . .	⅜
R.A.5	Hub oil seal, remove and refit (one side only), and road test . .	1
R.A.6	Pinion oil seal, remove and refit	1
	FRONT SUSPENSION	
F.S.1	Suspension unit complete, remove and refit (one side only), includes bleeding and adjusting brakes, adjusting track, and road test	2½
F.S.2	Suspension unit, remove, overhaul and refit, bleed and adjust brakes, and road test	5½
F.S.3	Shock absorber (one side only), remove and refit, and road test .	1
F.S.4	Hub bearings (one side only), remove and refit, and road test . .	1¼
F.S.5	Hub oil seal (one side only), remove and refit, and road test . .	1

Continued

Schedule of Operational Times—A 40/A 50—*continued*

Operation Number	Description of Operation	Time cycle (hours: minutes (m))
	FRONT SUSPENSION—*continued*	
F.S.6	Brake shoes (one side only), remove and refit, and road test	½
F.S.7	Coil spring (one side only), remove and refit, and road test	¾
	STEERING	
S.1	Trafficator and horn switch, remove and refit	¾
S.2	Steering wheel, remove and refit	1¼
S.3	Steering assembly, remove and refit (includes S.1, S.2, and S.11, also change speed controls as necessary), and road test	6
S.4	Steering cross tube, remove and refit, and road test	½
S.5	Steering side tube, remove and refit (one side only), and road test	½
S.6	Idler, remove, refit and adjust, and road test	1¼
S.7	Cross and/or side tube ends, replace one pair after removal	¼
S.8	Drop arm, remove and refit	½
S.9	Camber, check	10 m.
S.10	Track, check	10 m.
S.11	Track, adjust	¼
	ELECTRICAL EQUIPMENT AND INSTRUMENTS	
E.E.1	Dynamo, remove and refit	¾
E.E.2	Starter, remove and refit	1
E.E.3	Coil, remove and refit	¼
E.E.4	Distributor, remove and refit, and road test	½
E.E.5	H.T. leads, remove and fit new set	½
E.E.6	Ignition warning light bulb, and/or oil pressure bulb, remove and refit	¾
E.E.7	Headlamp complete, remove and refit	1
E.E.8	Headlamp light unit and/or bulb, remove and refit	½
E.E.9	Side lamp complete, remove and refit	½

Continued

Schedule of Operational Times—A 40/A 50—*continued*

Operation Number	Description of Operation	Time cycle (hours: minutes (m))
	ELECTRICAL EQUIPMENT AND INSTRUMENTS—*continued*	
E.E.10	Side lamp bulb, remove and refit	10 m.
E.E.11	Side lamp glass, remove and refit	10 m.
E.E.12	Tail and stop lamp, remove and refit, one side only	½
E.E.13	Rear number plate lamp, remove and refit	½
E.E.14	Tail and stop lamp glass, remove and refit, one side only	¼
E.E.15	Ignition and lighting switch, remove and refit	1½
E.E.16	Starter operating switch, remove and refit	1½
E.E.17	Panel light switch, remove and refit	1½
E.E.18	Screen wiper switch, remove and refit	1½
E.E.19	Screen wiper motor, remove and refit	1¼
E.E.20	Screen wiper drive, remove and refit (includes E.E.19)	2¾
E.E.21	Screen wiper blade, remove and refit	5 m.
E.E.22	Trafficator, remove and refit, one side only	1
E.E.23	Horn, remove and refit, one only	½
E.E.24	Control unit, remove and refit	1
E.E.25	Battery, remove and refit, including cleaning tray	1
E.E.26	Petrol gauge, facia unit, remove and refit	1
E.E.27	Petrol gauge, tank unit, remove and refit (does not include C.H.10)	¾
E.E.28	Speedometer head, remove and refit	1
E.E.29	Speedometer drive cable, remove and refit, and road test	¾
E.E.30	Oil pressure switch, remove and refit, and road test	¾
E.E.31	Radiator thermometer gauge, remove and refit	1
E.E.32	Interior roof lamp, remove and refit	½
E.E.33	Dip switch, remove and refit	½
E.E.34	Flasher unit, remove and refit	¼
E.E.35	Blinker control under steering wheel, remove and refit	1

Continued

Schedule of Operational Times—A 40/A 50—*continued*

Operation Number	Description of Operation	Time cycle (hours: minutes (m))
	BRAKES AND CONTROLS	
B.1	Brakes, dismantle and overhaul, including wheel cylinders, expander boxes where applicable, fitting exchange shoes, bleed and adjust, and road test (does not include B.4)	5
B.2	Road wheels, brake drums, remove, clean out dust from shoes and mechanism, refit, bleed and adjust, and road test	2
B.3	Brakes, adjust, including bleeding as necessary, and road test	1
B.4	Master cylinder, remove and refit, and road test	2
B.5	Brake hose, remove and refit, one, and road test	1¼
B.6	Handbrake cable, remove and refit	1
B.7	Stop light switch, remove and refit	1½
	CHASSIS	
C.H.1	Rear road spring, remove and refit (one side only)	1¼
C.H.2	Spring bushes, fit new (one side only)	1¾
C.H.3	Rear shock absorber, remove and refit, one (including changing link if necessary and topping up), and road test	1
C.H.4	Shock absorber, drain and refill, one (does not include C.H.3 or F.S.3)	¼
C.H.5	Anti-roll bar, remove and refit, and road test	½
C.H.6	Exhaust system complete, remove and refit	1¼
C.H.7	Exhaust down pipe, remove and refit	¾
C.H.8	Exhaust silencer, remove and refit	½
C.H.9	Exhaust tail pipe (where separate pipe is fitted), remove and refit.	½
C.H.10	Petrol tank, remove and refit	3
C.H.11	Petrol pipe, tank to pump, remove and refit	1
C.H.12	Petrol pipe, pump to carburetter, remove and refit	10 m.
C.H.13	Flexible petrol pipe, remove and refit	¼
	BODY MOUNTINGS	
B.M.1	Bonnet assembly, remove and refit	½

Continued

Schedule of Operational Times—A 40/A 50—*continued*

Operation Number	Description of Operation	Time cycle (hours: minutes (m))
	BODY MOUNTINGS—*continued*	
B.M.2	Bonnet prop, remove and refit	10 m.
B.M.3	Bonnet lock, remove and refit	20 m.
B.M.4	Radiator grille and/or cowl complete, remove and refit	½
B.M.5	Front wing (one side only), remove and refit	2
B.M.6	Rear wing (one side only), remove and refit	2
B.M.7	Front bumper assembly, remove and refit	¾
B.M.8	Rear bumper assembly, remove and refit	¾
B.M.9	Overrider—each, remove and refit	¼
	BODY FITTINGS	
B.F.1	Front door complete, each, remove, refit and rehang	1¼
B.F.2	Front door lock mechanism, each, remove and refit	¾
B.F.3	Front door private lock, remove and refit	1
B.F.4	Front door window mechanism, each, remove and refit	1
B.F.5	Front door glass, each, remove and refit	1½
B.F.6	Front door ventilating window, each, remove and refit	2
B.F.7	Rear door complete, each, remove and refit and rehang	1¼
B.F.8	Rear door lock mechanism, each, remove and refit	¾
B.F.9	Rear door window mechanism, each, remove and refit	1
B.F.10	Rear door glass, each, remove and refit	2
B.F.11	Rear door ventilating window, each, remove and refit	2
B.F.12	Door handle (outside), each, remove and refit	½
B.F.13	Door handle (inside), each, remove and refit	¼
B.F.14	Windscreen, remove and refit	2½
B.F.15	Rear light, remove and refit	2
B.F.16	Boot lid, remove and refit	½
B.F.17	Boot lid hinge, each, remove and refit	¼
B.F.18	Boot lid lock, remove and refit	¼
B.F.19	Boot weatherstrip, fit new	1
B.F.20	Front seat complete, each, remove and refit	¼
B.F.21	Rear seat squab, remove and refit	½

STEERING TUBES

A 30

The steering side and cross tubes having adjustable ball pins controlled by a screwed socket, secured by a split pin have been fitted as alternatives to tubes of the non-adjustable type. This type has now been dispensed with, and replaced by tubes with non-adjustable ends.

INTERCHANGEABILITY

The new side and cross tubes with ends can be used to replace the old type.

SUMMARY OF ALTERATION

Type	Range	Plate	Description	Number per Vehicle	Austin Part Number	Parts List Publication Number
A2S.4 AS.4	R.H.S. To C.39564 L.H.S. To C.39588 R.H.S. To C.40254 L.H.S. To C.42253		Steering Side Tubes, with adjustable ball pins (Alternative to 2A 6024) use 2A 6093	2	2A 6017	
			Steering Cross Tube, with adjustable ball pins (Alternative to 2A 6025) use 2A 6089	1	2A 6018	Pub. 883B, Steering, p. 5
A2S.4 AS.4	R.H.S. C.39565 on L.H.S. C.39589 on R.H.S. C.40255 on L.H.S. C.42254 on		Steering Side Tubes, with non-adjustable ball pins (Alternative to 2A 6024) . . .	2	2A 6093	
			Steering Cross Tube, with non-adjustable ball pins (Alternative to 2A 6025) . . .	1	2A 6089	

FOR YOUR RECORDS	PARTS LISTS
	STOCK CARDS
	PARTS ORDERED
	ALTERATIONS NOTED

Continued

STEERING TUBES—*continued*

SUMMARY OF ALTERATION—*continued*

Type	Range	Plate	Description	Number per Vehicle	Austin Part Number	Parts List Publication Number
A2S.4 AS.4	R.H.S. To C.39564 L.H.S. To C.39588 R.H.S. To C.40254 L.H.S. To C.42253		Cross Tube End Assembly right hand thread	1	7H 3562	Pub. 883B, Steering, p. 5
			Locknut, right hand thread	1	7H 3559	
			Cross Tube End Assembly, left hand thread	1	7H 3563	
			Locknut, left hand thread	1	7H 3560	
A2S.4 AS.4	R.H.S. C.39565 on L.H.S. C.39589 on R.H.S. C.40255 on L.H.S. C.42254 on		Cross Tube End Assembly, right hand thread	1	2A 6090	
			Locknut, right hand thread	1	51K 320	
			Cross Tube End Assembly, left hand thread	1	2A 6091	
			Locknut, left hand thread	1	51K 365	

STEERING WHEEL

Austin-Healey 100

The telescopically adjustable steering wheel which was originally fitted to the Austin-Healey car has been discontinued in favour of a non-adjustable one in conjunction with an adjustable driver's seat—see this Journal, Volume 24, Cars, "Body", pages 9 and 10.

The old and new steering wheels, together with the horn and trafficator switches, are shown in Fig. 1 (Plate EB): the old and new parts are numbered and reference is made to these in the "Summary of Alteration" panel.

To preserve a neat appearance the width of the cut-out in the facia panel for the steering column has been reduced from $2\frac{1}{4}$" (57.15 mm.), as shown by the dotted line, to $1\frac{3}{4}$" (44.45 mm.)—see Fig. 2.

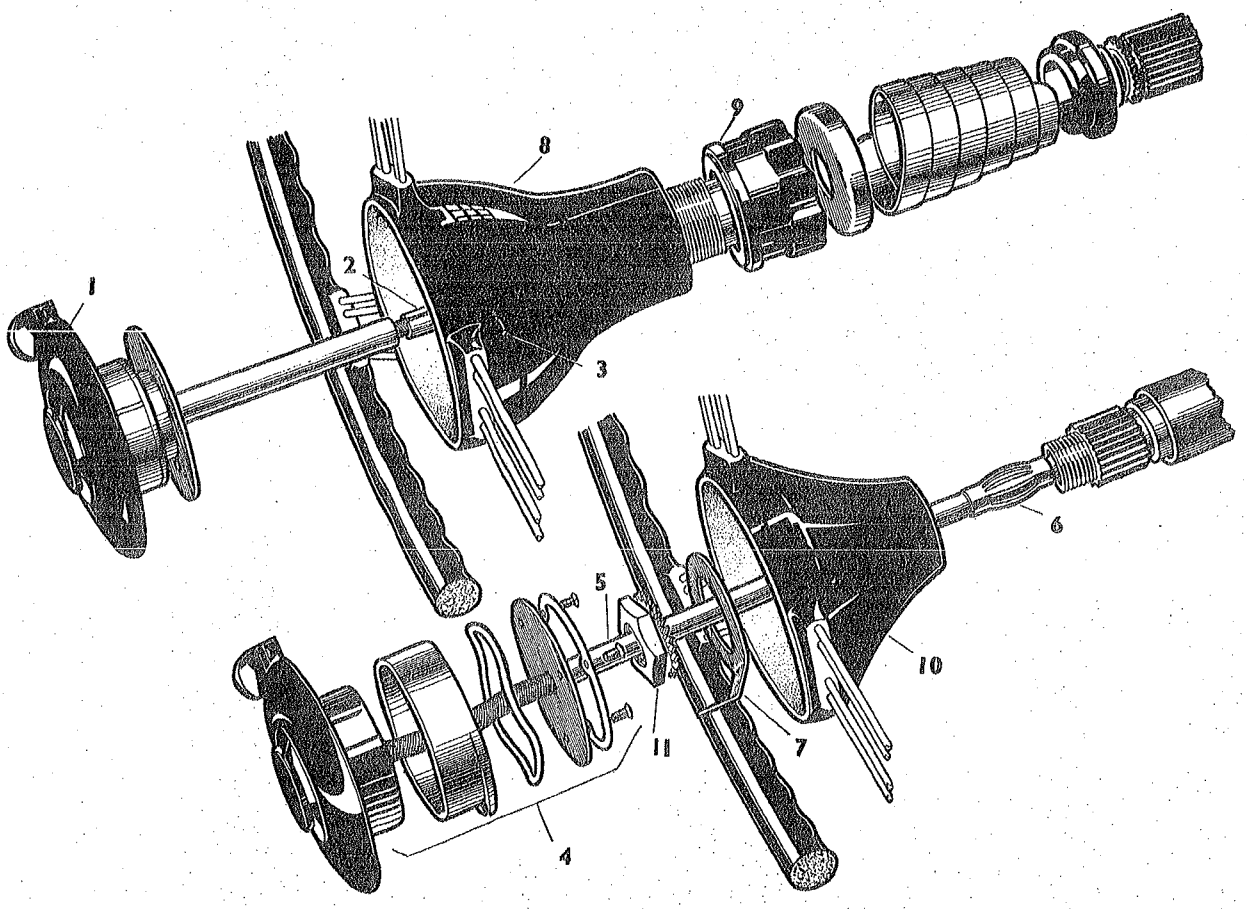

PLATE EB

Fig. 1

STR 1380

FOR YOUR RECORDS	PARTS LISTS
	STOCK CARDS
	PARTS ORDERED
	ALTERATIONS NOTED

Continued

STEERING WHEEL—*continued*

INTERCHANGEABILITY

The non-adjustable steering gear with the appropriate steering wheel and trafficator switch with horn push can be used to replace the adjustable steering gear. The new facia panel cannot be used for replacements of the old one unless the non-adjustable steering gear is also fitted.

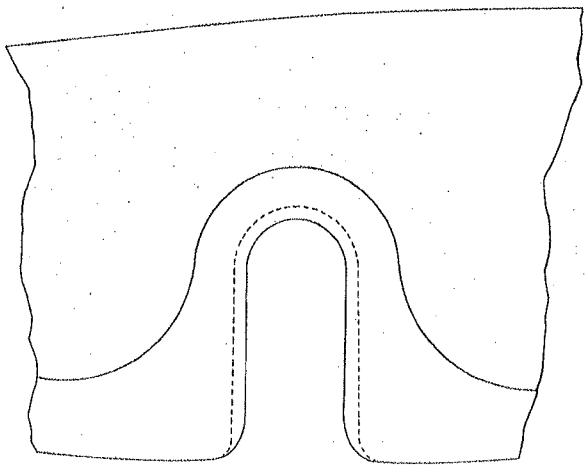

Fig. 2 *STR 1381*

SUMMARY OF ALTERATION

Type	Range	Plate	Description	Number per Vehicle	Austin Part Number	Parts List Publication Number
BN.1	R.H.S. C.138975–149949 / L.H.S. C.138031–149929	EB.1	Horn and trafficator switch on steering column	1	1B 6225	
		EB.2	Stator tube	1	1B 6226	
		EB.3	Retaining screws	2	1B 6210	
BN.1	R.H.S. C.149950 on / L.H.S. C.149930 on	EB.4	Horn and trafficator switch on steering column	1	17H 5246	Pub. 1050, Electrical, p. 2
		EB.5	Stator tube	1	7H 5474	
			Rubber sleeves for stator tube	3	3H 677	
		EB.6	Anti-rattle spring	1	1G 6261	
		EB.7	Trip lever	1	1H 2635	
BN.1	R.H.S. C.138975–149949 / L.H.S. C.138031–149929		Steering gear assembly, less wheel and lever, R.H. Steering	1	1B 6208	Pub. 1050, Steering, p. 1
			Steering gear assembly, less wheel and lever, L.H. Steering	1	1B 6196	

Continued

STEERING WHEEL—*continued*

SUMMARY OF ALTERATION—*continued*

Type	Range	Plate	Description	Number per Vehicle	Austin Part Number	Parts List Publication Number
BN.1	R.H.S. C.138975–149949 L.H.S. C.138031–149929	EB.8	Steering wheel (telescopically adjustable)	1	1B 6203	
		EB.9	Clamping nut	1	1B 6204	
		E.1	Telescopic steel dust cover for inner column	1	1B 6211	
		E.2	Support for dust cover	1	1B 6214	
		E.3	Cup for dust cover	1	1B 6215	
BN.1	R.H.S. C.149950 on L.H.S. C.149930 on		Steering gear assembly, less wheel and lever, R.H. Steering	1	1B 6217	
			Steering gear assembly, less wheel and lever, L.H. Steering	1	1B 6219	
		EB.10	Steering wheel (non-adjustable)	1	ALT-134	
		EB.11	Nut for steering wheel	1	2K 6057	
			Shakeproof washer	1	2K 8929	Pub. 1050, Steering, p. 1.
BN.1	R.H.S. C.138975–149949 L.H.S. C.138031–149929	E.5	Inner column and cam, R.H. Steering	1	7H 6778	
			Inner column and cam, L.H. Steering	1	7H 6781	
		E.6	Felt bush	1	7H 6784	
		E.7	Support washer for felt bush	1	7H 6785	
		E.8	Anti-rattle washers, rubber, for inner column	2	7H 6786	
BN.1	R.H.S. C.149950 on L.H.S. C.149930 on		Inner column and cam, R.H. Steering	1	7H 6792	
			Inner column and cam, L.H. Steering	1	7H 6791	
			Felt bush	1	7H 6711	
			Support washer for felt bush	1	7H 6706	

Continued

STEERING WHEEL—*continued*

SUMMARY OF ALTERATION—*continued*

Type	Range	Plate	Description	Number per Vehicle	Austin Part Number	Parts List Publication Number
BN.1	R.H.S. C.138975–149949 L.H.S. C.138031–149929		*Facia panel, R.H. Steering	1	14B 1761	
			*Facia panel, L.H. Steering	1	14B 1824	
BN.1	R.H.S. C.149950 on L.H.S. C.149930 on		Facia panel, R.H. Steering	1	14B 3542	Pub. 1050, Body Shell, p. 2.
			Facia panel, L.H. Steering	1	14B 3543	
BN.1	R.H.S. C.138975 on L.H.S. C.138031 on		*Instrument control panel assembly (less instruments)	1	4B 2114	
			*Seal (plastic)	1	14B 2745	
			*Screws	8	53K 2636	
			*Spring washers	8	2K 1209	

* Not previously listed.

STEERING GEAR ROCKER SHAFT

A 40

The cam peg is now being riveted into the rocker shaft instead of being an interference-fit as hitherto. This ensures greater security of the cam peg, which now ceases to be a serviceable part. It is important that a riveted peg is not replaced by one of the old type. When the peg becomes worn the rocker shaft must be replaced as an assembly.

INTERCHANGEABILITY

The new rocker shaft with riveted ball peg will be supplied for replacements when stocks of the old ones are exhausted. The original ball peg will continue to be available for servicing earlier type rocker shafts only.

SUMMARY OF ALTERATION

Type	Range	Plate	Description	Number per Vehicle	Austin Part Number	Parts List Publication Number
A 40	To C.833955		*Rocker shaft with peg and nut for steering lever (use 7H 6489)	1	H7-185	Pub. 1099, Steering, p. 3
			Rocker shaft with peg . .	1	7H 6265	
			Peg (for 7H 6265 and H7-185 only) . . .	1	7H 6232	
	C.833956 on		Rocker shaft with peg and nut for steering lever .	1	7H 6489	

* Not previously listed but see Austin Service Journal—Cars, Volume 23, section "Steering", page 20.

FOR YOUR RECORDS	PARTS LISTS
	STOCK CARDS
	PARTS ORDERED
	ALTERATIONS NOTED

Published July 19, 1954

STEERING CROSS AND SIDE TUBES

A 40, A 70, Austin-Healey 100

The steering cross and side tubes with adjustable ball pins have now been discontinued in favour of ones with spring-loaded non-adjustable ball pins.

INTERCHANGEABILITY

The new cross tubes with ends are interchangeable with the old ones; end assemblies are also separately interchangeable. This also applies to the side tubes and the side tube ends. The new parts will be supplied for replacements when stocks of the old ones are exhausted.

SUMMARY OF ALTERATION

Type	Range	Plate	Description	Number per Vehicle	Austin Part Number	Parts List Publication Number
A 40	C.649032–854228		Steering side tube with ends, right hand	1	1G 6203	Pub. 1099, Steering, pp. 9/10
			Steering side tube with ends, left hand	1	1G 6204	
			Dust covers, rubber	4	1G 6210	
			Steering cross tube with ends	1	1G 6211	
			End assembly, R.H. thread	1	1G 6216	
			End assembly, L.H. thread	1	1G 6217	
			Dust covers, rubber	2	1G 6210	
	C.854229 on		Steering side tube with ends, right hand	1	1G 6311	
			Steering side tube with ends, left hand	1	1G 6312	
			Dust covers, rubber	4	17H 3400	
			Clips for covers	4	17H 3401	
			Steering cross tube with ends	1	1G 6313	
			End assembly, R.H. thread	1	1G 6309	
			*Locknut, R.H. thread	1	2K 7657	
			End assembly, L.H. thread	1	1G 6310	
			*Locknut, L.H. thread	1	2K 7658	
			Dust covers, rubber	2	17H 3400	
			Clips for covers	2	17H 3401	

* Not previously listed.

Continued

FOR YOUR RECORDS: PARTS LISTS | STOCK CARDS | PARTS ORDERED | ALTERATIONS NOTED

Published September 20, 1954

STEERING CROSS AND SIDE TUBES—*continued*

SUMMARY OF ALTERATION—*continued*

Type	Range	Plate	Description	Number per Vehicle	Austin Part Number	Parts List Publication Number
Austin-Healey 100	C.138031–157623		Side tubes with adjustable ball pins	2	1B 6200	Pub. 1050, Steering, p. 4
			Anti-rattle springs	4	6K 17	
			Split pins for sockets	4	CPS 0316	
			Dust covers, rubber	4	1G 6210	
			Cross tube with adjustable ball pins	1	1G 6211	
			Cross tube end assembly, R.H. thread	1	1G 6216	
			Cross tube end assembly, L.H. thread	1	1G 6217	
			Anti-rattle springs	2	6K 17	
			Split pins for ball sockets	2	CPS 0316	
			Dust covers, rubber	2	1G 6210	
	C.157624 on		Side tubes with ends	2	1B 6228	
			Dust covers, rubber	4	17H 3400	
			Clips for covers	4	17H 3401	
			Cross tube with ends	1	1G 6313	
			Cross tube end assembly, R.H. thread	1	1G 6309	
			Cross tube end assembly, L.H. thread	1	1G 6310	
			Dust covers, rubber	2	17H 3400	
			Clips for covers	2	17H 3401	
A 70	Saloon R.H.S. C.73817–160021 L.H.S. C.73829–160045 Pick-Up R.H.S. C.73872–160089 L.H.S. C.73743–160903		Side tube with adjustable ball pins, right hand	1	1G 6153	Saloon, Pub. 780A, pp. 40/41 Pick-Up, Pub. 853, pp. 37/38
			Side tube only, right hand	1	1A 6659	
			Side tube end assemblies, R.H. thread	2	B3–253	
			Locknuts, R.H. thread	2	2K 7657	
			Ball sockets, bottom	2	1G 6150	
			Anti-rattle springs	2	6K 17	
			Split pins for sockets	2	2K 1235	
			Ball pins	2	1G 6149	
			Nuts for ball pins	2	2K 3996	
			Split pins	2	2K 1232	
			Dust covers, rubber	2	1G 4241	
			Grease nipples	2	2H 2793	

Continued

STEERING CROSS AND SIDE TUBES—*continued*

SUMMARY OF ALTERATION—*continued*

Type	Range	Plate	Description	Number per Vehicle	Austin Part Number	Parts List Publication Number
A 70	Saloon R.H.S. C.73817–160021 L.H.S. C.73829–160045		Side tube with adjustable ball pins, left hand	1	1G 6154	Saloon, Pub. 780A, pp. 40/41 Pick-Up, Pub. 853, pp. 37/38
			Side tube only, left hand	1	1A 6660	
			Side tube end assemblies, L.H. thread	2	B3–254	
			Locknuts, L.H. thread	2	2K 7658	
			Ball sockets, bottom	2	1G 6150	
			Anti-rattle springs	2	6K 17	
			Split pins for sockets	2	2K 1235	
			Ball pins	2	1G 6149	
			Nuts for ball pins	2	2K 3996	
			Split pins	2	2K 1232	
			Dust covers, rubber	2	1G 4241	
			Grease nipples	2	2H 2793	
	Pick-Up R.H.S. C.73872–160089 L.H.S. C.73743–160903		Cross tube with adjustable ball pins	1	1B 6148	
			Cross tube only	1	1B 6149	
			Cross tube end assembly, R.H. thread	1	B3–255	
			Locknut, R.H. thread	1	2K 7657	
			Cross tube end assembly, L.H. thread	1	B3–256	
			Locknut, L.H. thread	1	2K 7658	
			Ball sockets, bottom	2	1G 6150	
			Anti-rattle springs	2	6K 17	
			Split pins for ball sockets	2	2K 1235	
			Ball pins	2	1G 6149	
			Nuts for ball pins	2	2K 3996	
			Split pins	2	2K 1232	
			Dust covers, rubber	2	1G 4237	
			Grease nipples	2	2H 2793	
	Saloon R.H.S. C.160022 on L.H.S. C.160046 on		Side tube with ends, right hand	1	1G 6311	
			Side tube with ends, left hand	1	1G 6312	
			Dust covers, rubber	4	17H 3400	
			Clips for covers	4	17H 3401	
			Nuts for ball pins	4	2K 3996	
			Split pins for nuts	4	2K 1232	
			Cross tube with ends	1	1B 6227	
			Cross tube end assembly, R.H. thread	1	1G 6309	
	Pick-Up R.H.S. C.160090 on L.H.S. C.160904 on		Locknut, R.H. thread	1	2K 7657	
			Cross tube end assembly, L.H. thread	1	1G 6310	
			Locknut, L.H. thread	1	2K 7658	
			Nuts for ball pins	2	2K 3996	
			Split pins for nuts	2	2K 1232	
			Dust covers, rubber	2	17H 3400	
			Clips for covers	2	17H 3401	

STEERING IDLER ADJUSTMENT

A 30, A 40, A 70, A 90

Instances have occurred where a slight "knock" in the steering has resulted from end float of the shaft in the steering idler. This can be readily adjusted by removing one or more of the paper joint washers which are fitted beneath the idler top cover.

The top cover should be adjusted by means of the paper joint washers so that there is no pre-loading and no end float of the idler shaft.

FOR YOUR RECORDS	PARTS LISTS
	STOCK CARDS
	PARTS ORDERED
	ALTERATIONS NOTED

STEERING CHECK

A 30, A 40 (Series 2, 3, 4), A 70, Austin-Healey 100, A 90, A 125, A 135

Whenever it may be necessary to examine or check the front suspension or steering linkage, and the front end has to be jacked up, it is essential that the relative road position of the wheels and suspension be maintained.

This will be achieved if, before jacking up, a distance piece of definite dimensions be placed between the shock absorber arm and the upper spring plate (on each side of the vehicle) as shown at 'A' in the illustration of an A 30 front suspension unit.

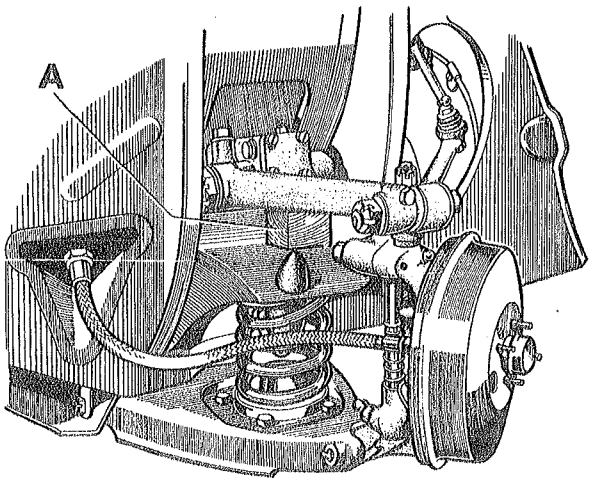

STR 1407

As will be seen from this table, with certain exceptions, the dimensions of the distance pieces vary for different models and it is important that the correct distance piece be used.

It is very necessary to use three distance pieces when building up a suspension unit, because the arms must be correctly set before the various bearings are tightened. *DO NOT FORGET* to remove the distance pieces after lowering the jack.

These distance pieces may be of steel or hardwood, and the following table gives the dimensions for the various models.

Model	Vehicle Range	Dimensions of Distance Piece
A 30	All	$1\frac{3}{8}$"
A 40 (Series 2)	R.H.S. To 288909 L.H.S. To 288785	$1\frac{3}{4}$"
A 40 (Series 2)	R.H.S. 288910-609259 L.H.S. 288786-609259	$2\frac{1}{8}$"
A 40 (Series 3)	All	3"
A 40 (Series 4)	All	$2\frac{1}{4}$"
A 70	All	$2\frac{3}{8}$"
Austin-Healey 100	All	2"
A 90	All	$2\frac{3}{8}$"
A125	All	$1\frac{5}{8}$"
A 135	All	$1\frac{5}{8}$"

STEERING GEAR ADJUSTMENT

A 70, Austin-Healey 100

New steering gears incorporating screw type rocker shaft adjustment instead of selective shim adjustment have been introduced to facilitate service. The new steering gears are identical with their old counterparts with the exception of the side cover. A special new feature is the locking plate for the thrust screw, which is additional to the thrust screw lock-nut and ensures the absolute security of the thrust screw setting. The method for assembling and adjusting the new steering gear can be seen from the accompanying illustrations.

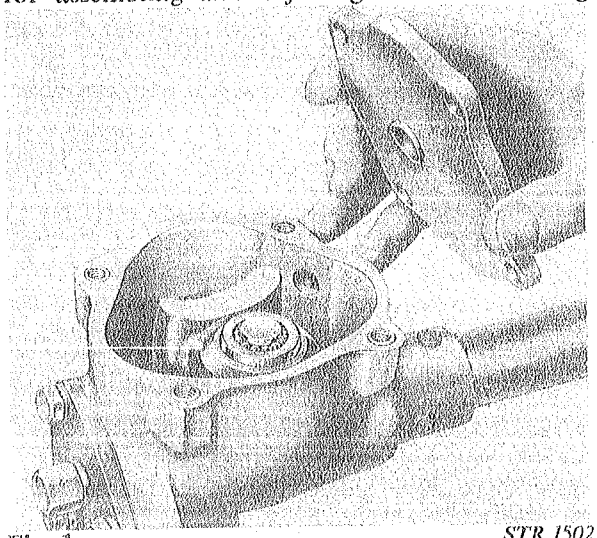

Fig. 1 *STR 1502*

The side cover and paper joint washer are fitted to the steering box.

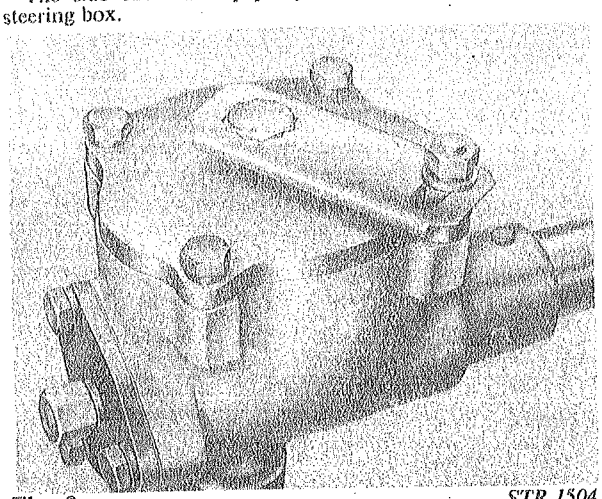

Fig. 3 *STR 1504*

The elongated slot in the locking plate enables the plate to secure the thrust screw in any setting.

INTERCHANGEABILITY

The new steering gears are interchangeable with the old ones and will be supplied for replacements. The new side cover together with the thrust screw, locknut, special stud and locking plate may be fitted to replace the old side cover.

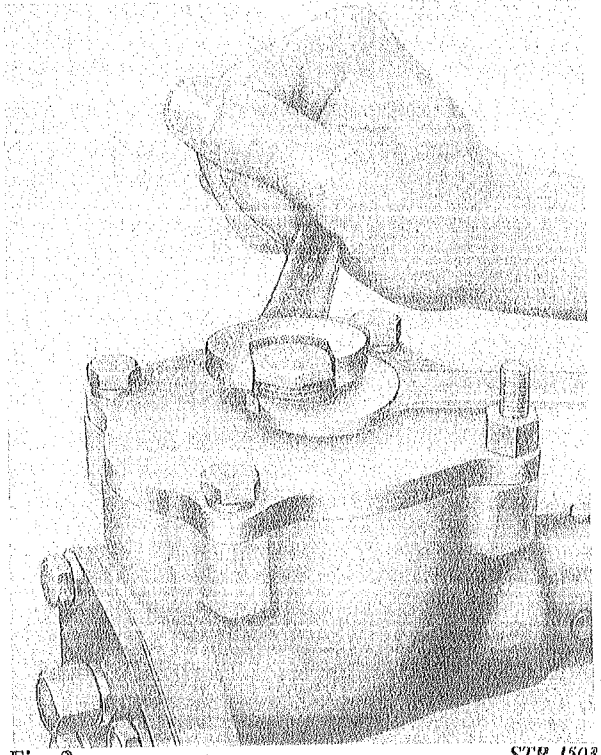

Fig. 2 *STR 1503*

Three setscrews and a special stud are used to secure the side cover. The steering gear must be in the straight ahead position when the thrust screw is adjusted. After tightening the locknut make sure that there is still no end float, or stiffness of the rocker shaft.

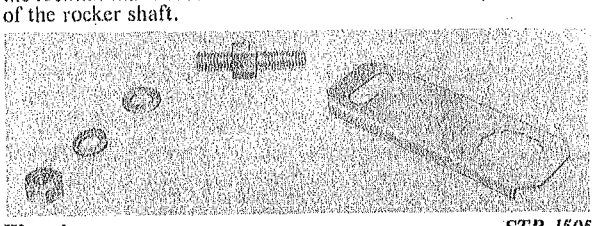

Fig. 4 *STR 1505*

The locking plate is fixed to the special stud with the nut and washers.

Issue 13

Published November 29, 1954

STEERING GEAR ADJUSTMENT—*continued*

Type	Range	Plate	Description	Number per Vehicle	Austin Part Number	Parts List Publication Number
A70	R.H.S. C.127101–157684 L.H.S., C.127135–157722		Steering gear assembly, less wheel and lever, R.H. Steering	1	1B 6188	Pubs. 780A, p. 42 Pub. 853, p. 39
			Steering gear assembly less wheel and lever, L.H. Steering	1	1B 6190	
			Cover plate with thrust button	1	7H 6750	
			Shims (steel) .004"–.005" thick	as req.	7H 6743	
			Shims (paper) .010" thick	as req.	7H 6744	
			Shims (plastic) .002" thick	as req.	7H 6745	
			Setscrews	4	7H 6758	
	R.H.S. C.157685 on L.H.S., C.157723 on		Steering gear assembly, less wheel and lever R.H. Steering	1	1B 6230	
			Steering gear assembly, less wheel and lever, L.H. Steering	1	1B 6232	
			Cover Plate	1	7H 6731	
			Joint washer, paper	1	7H 6744	
			Setscrews for cover plate	3	7H 6700	
			Spring washers	3	2K 1211	
			Thrust screw	1	7H 6799	
			Locknut for thrust screw	1	7H 6704	
			Lockplate for thrust screw.	1	7H 6801	
			Special stud for side cover and lockplate	1	7H 6800	
			Plain washer for stud	1	PWZ 106	
			Spring washer	1	2K 1211	
Austin-Healey 100	R.H.S., C.149950–219136 L.H.S. C.149930–219257		Steering gear assembly, less wheel and lever, R.H. Steering	1	1B 6217	Pub. 1050, Steering, p. 1
			Steering gear assembly, less wheel and lever, L.H. Steering	1	1B 6219	
	R.H.S., C.219137 on L.H.S., C.219258 on		Steering gear assembly, less wheel and lever, R.H. Steering	1	1B 6267	
			Steering gear assembly, less wheel and lever, L.H. Steering	1	1B 6269	

FOR YOUR RECORDS	PARTS LISTS
	STOCK CARDS
	PARTS ORDERED
	ALTERATIONS NOTED

Continued

STEERING GEAR ADJUSTMENT—*continued*

Type	Range	Plate	Description	Number per Vehicle	Austin Part Number	Parts List Publication Number
Austin-Healey 100	R.H.S., C.138975–219136 L.H.S. C.138031–219257		Cover plate with button, R.H. Steering	1	7H 6787	Pub. 1050, Steering, p. 1
			Cover plate with button, L.H. Steering	1	7H 6788	
			Joint washers, paper, .010" thick	as req.	7H 6744	
			Joint washers, steel, .005" thick	as req.	7H 6743	
			Joint washers, plastic, .002" thick	as req.	7H 6745	
			Setscrews, $\frac{7}{8}$" long, B.S.F.	4	7H 6700	
			Spring washers	4	2K 1211	
	R.H.S., C.219137 on L.H.S., C.219258 on		Cover plate, R.H. Steering	1	7H 6802	
			Cover plate, L.H. Steering	4	7H 6803	
			Joint washer, paper	1	7H 6744	
			Setscrews for cover plate	3	7H 6700	
			Spring washers	3	2K 1211	
			Thrust screw	1	7H 6799	
			Locknut for thrust screw	1	7H 6704	
			Lockplate for thrust screw	1	7H 6801	
			Special stud for side cover and lockplate	1	7H 6800	
			Nut for stud	1	2K 3985	
			Plain washer for nut	1	PWZ 106	
			Spring washer	1	2K 1211	

STEERING SIDE AND CROSS TUBE LEVERS

A 40 (GS.5), A 50 (HS.5)

A modified side and cross tube lever has been introduced to permit equal steering lock for both left and right hand turns. The new lever is identical with the old one except for the angular disposition of the unsplined keyway in the large hole —see illustration.

INTERCHANGEABILITY

The new side and cross tube levers will be supplied for all service replacements.

The old levers will continue to be used on the steering idlers only, until all stocks of the old levers are exhausted, after which the new levers will be fitted to the idlers also.

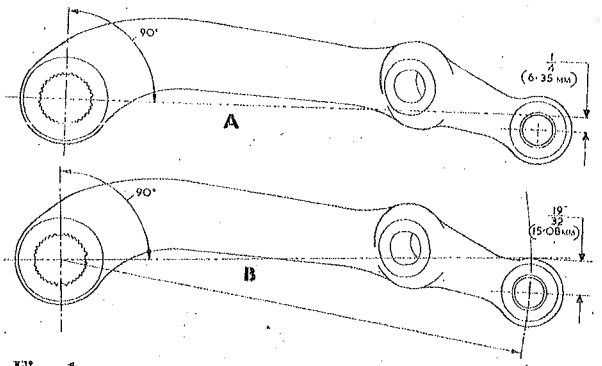

Fig. 1

STR 1521

If it is desired to improve the steering lock on one of the early cars, the new arm should be fitted to the steering box, and the rear steering lock stop on the steering box side of the car, should be filed away until it matches the stop on the idler side. This stop, see arrow Fig. 2, was built up at the time of manufacture to suit the original side tube lever, by depositing approximately $\frac{1}{16}$" (1.59 mm.) of weld metal.

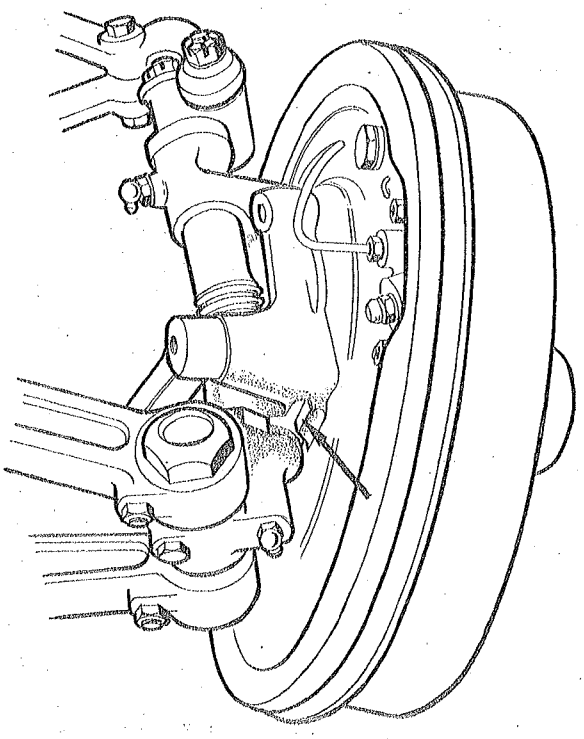

Fig. 2

STR 1522

A = Old levers, part numbers 1G6282 and 1G6283

B = New levers, part numbers 1G6328 and 1G6329

Continued

FOR YOUR RECORDS	PARTS LISTS
	STOCK CARDS
	PARTS ORDERED
	ALTERATIONS NOTED

STEERING SIDE AND CROSS TUBE LEVERS—*continued*

SUMMARY OF ALTERATION

Type	Range	Plate	Description	Number per Vehicle	Austin Part Number	Parts List Publication Number
A40 (GS.5) A50 (HS.5)	To C.E.6989		Steering side and cross rod lever, right hand (for steering box), R.H. Steering	1	1G 6282	Pub. 1099A, Steering, p. 2
			Steering side and cross rod lever, left hand (for steering box), L.H. Steering .	1	1G 6283	
	C.E.6990 on		Steering side and cross rod lever, right hand (for steering box), R.H. Steering	1	1G 6328	
			Steering side and cross rod lever, left hand (for steering box), L.H. Steering .	1	1G 6329	
	To*		Steering side and cross rod lever, left hand (for steering idler), R.H. Steering	1	1G 6283	
			Steering side and cross rod lever, right hand (for steering idler), L.H. Steering	1	1G 6282	
	*on		Steering side and cross rod lever, left hand (for steering idler), R.H. Steering.	1	1G 6329	Pub. 1099A, Steering, p. 3
			Steering side and cross rod lever, right hand (for steering idler), L.H. Steering	1	1G 6328	

* To be published at a later date.

INTERCHANGEABLE PARTS

The following parts have been superseded by new ones of modified design or material. These parts are interchangeable with their old counterparts and will be supplied for replacements when stocks of the old ones are exhausted.

Description	Old Part	New Part	Type and Parts List Publication Number
Sparking Plugs	2H 4228	2A 480	A 30 Pub. 883B, Electrical, p. 3
Remarks: The new plug has a gap of .022″ (.55 mm.) instead of .018″ (.45 mm.) to prevent misfiring at low engine speeds. Commencing Engine Number 32850.			

Description	Old Part	New Part	Type and Parts List Publication Number
Starter Gear	2A 292	2A 381	A 30 Pub. 883B, Engine, p. 3
Remarks: It is now established that the new starter gear 2A 381 can be used for replacements of 2A 292. Therefore, amend statement published in this Journal, Volume 24, section "Engine", page 47, under heading "Interchangeability" to this effect.			

Description	Old Part	New Part	Type
Exhaust Pipe with flange	1B 2700	1B 2954	Austin-Healey 100
Remarks: New pipe incorporates an improved type of flexible pipe to give longer life. COMMENCING CHASSIS NUMBERS:— R.H. Steering – – 149648 L.H. Steering – – 149628			

FOR YOUR RECORDS	PARTS LISTS
	STOCK CARDS
	PARTS ORDERED
	ALTERATIONS NOTED

Continued

INTERCHANGEABLE PARTS—*continued*

Description	Old Part	New Part	Type and Parts List Publication Number
Door Casing Clips	14G 1857	14B 2851	A 70 Pub. 780A, p. 81
Remarks: Modified design.			

Description	Old Part	New Part	Type and Parts List Publication Number
Front Door Window Glass Glazing Rubber and Draught Strips	14A 760	14A 989	A 30 Pub. 883B, Doors, p. 4
Remarks: Improved Design.			

Description	Old Part	New Part	Type and Parts List Publication Number
Cups for clutch thrust springs	7H 3026 (was 40805)	7H 3221	8-H.P. (AS.1) Pub. 371, p. 15 A 30 Pub. 883B, Engine, p. 17
Remarks: Slotted type cups now used. Interchangeable in sets of 6 only.			

Description	Old Part	New Part	Type and Parts List Publication Number
Tab Washers (for clutch release lever nuts) .	7H 3182	7H 3222	A 30 Pub. 883B, Engine, p. 17 8-H.P. (AS.1) Pub. 371, p. 15
Remarks: Smaller tab washers introduced.			

Continued

INTERCHANGEABLE PARTS—*continued*

Description	Old Part	New Part	Type and Parts List Publication Number
Boot Lid Hinge, right hand (chromium finish)	4G 5621	—	A 40 Saloon Pub. 884, p. 89
Boot Lid Hinge, right hand (painted finish) .	—	14G 4744	A 40 Coupe Pub. 884/1, p. 14
Boot Lid Hinge, left hand (chromium finish) .	4G 5622	—	A 70 Saloon Pub. 780A, p. 88
Boot Lid Hinge, left hand (painted finish) .	—	14G 4745	
Remarks: Boot lid hinges can be supplied either in chromium or painted finish.			

Description	Old Part	New Part	Type and Parts List Publication Number
Heater Hose, 24″ long, fresh air intake . .	4B 8693	—	A 40 Pubs. 884, p. 95, 884/1, p. 19
Heater Hose, 24½″ long, fresh air intake . .	—	14A 2612	A 70 Pubs. 780A, p. 95, 853/1, p. 21
Remarks: Length of hose increased from 24″ to 24½″.			

AMENDMENTS TO LITERATURE

8-H.P. (AS.1) PARTS LIST, PUBLICATION 371.	Page 88	Amend part number 2K 8975 for Packing (rubber) to read 2H 8975.
A 40 SALOON PARTS LIST, PUBLICATION 884.	Pages 35 & 44	Amend part number P 439 for Set of Linings and rivets, Export only, to read P 4006.
A 40 SPORTS PARTS LIST, PUBLICATION 805/1.	Page 48	Amend part number 4G 4823 for Driving Mirror to read 4B 4823.
A 40 COUPE PARTS LIST, PUBLICATION 884/1.	Page 15.	Amend part number 4G 2502 for Steering Column Packing to read 4B 2502.

Continued

AMENDMENTS TO LITERATURE—*continued*

A 125 PARTS LIST, PUBLICATION 779.

Page 81. Add "DM.1 only" in "Vehicle Range" column, against the following items:—

Rear Bumper with overiders	1	–	1D 5928
Overiders – – –	2	–	1D 5929
Setscrews, bumper to brackets – – –	2	–	2K 8307
Washers – – –	4	–	2K 1207
Spring Washers – –	2	–	2K 5898
Bracket, right hand, for rear bumper – – –	1	–	1D 5930
Bracket, left hand, for rear bumper – – –	1	–	1D 5931
Setscrews, short, brackets to frame – – –	2	–	2K 3230
Setscrews, long, brackets to frame – – –	2	–	2K 3236
Spring Washers – –	4	–	2K 5897

PART NUMBER ALTERATION LIST, PUBLICATION 777A.

Page 14. Amend part number 7033-59 to read 7033-59A.

THE AUSTIN SERVICE JOURNAL, CARS—VOLUME 23.

Section "Axle—Rear".

Page 12. Add the following data at the bottom of the page:—

Commencing Chassis Numbers:—

16-H.P. Taxi, R.H. Steering – –	153352
16-H.P. Hire-Car, L.H. Steering –	153571

Section "Body".

Page 37. Add the following data under "Commencing Body Numbers":—

A 40 – – – – – 93533

Note: The body number 54984 previously published refers to door casings in a different material only, utilizing the original screws and washers (see this Journal, Volume 23, section "Body", page 61).

Page 62. Add the following data under "Commencing Body Numbers":—

A 70 Saloon – – – 36629

Section "Engine".

Page 58. Under the heading "Interchangeability" amend the sentence to read "The new valve guide shroud can be used for replacements of the old one".

Section "Stores Data".

Page 59. Amend new part number 7H 7575 for Windscreen Wiper Blade (16-H.P. Taxi and Hire-Car) to read 2H 7575.

Section "Suspension".

Page 8. Add the following data at the bottom of the page:—

Commencing Chassis Numbers:—

A 125 Saloon, R.H. Steering – –	10388
A 125 Limousine, R.H. Steering –	10371

A 30 DISTINGUISHING FEATURES

The chassis details of the A 30 4-door saloon series AS.4 and 2-door saloon series A2S.4 are identical, both models differing from the A 30 4-door saloon series AS.3 in the following respects :—

The rear boot floor and petrol tank have been redesigned to make better use of the available space in the luggage boot. To effect this the petrol filler tube now rises from the rear of the tank and emerges through the rear skirt panel of the body. The new petrol filler tube A is of larger diameter than the old one B, making the

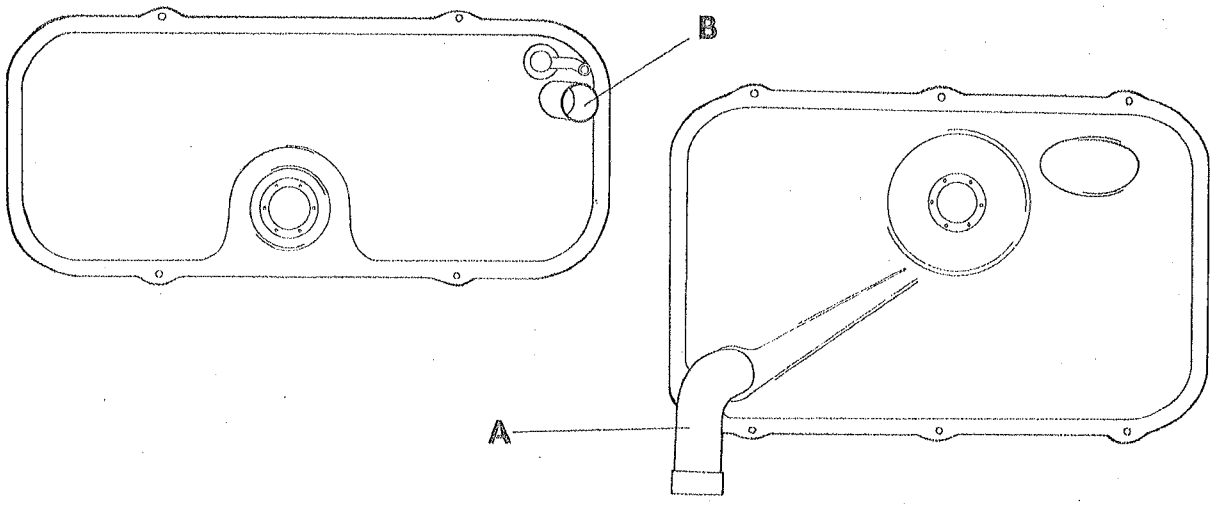

Fig. 1 STR/1295

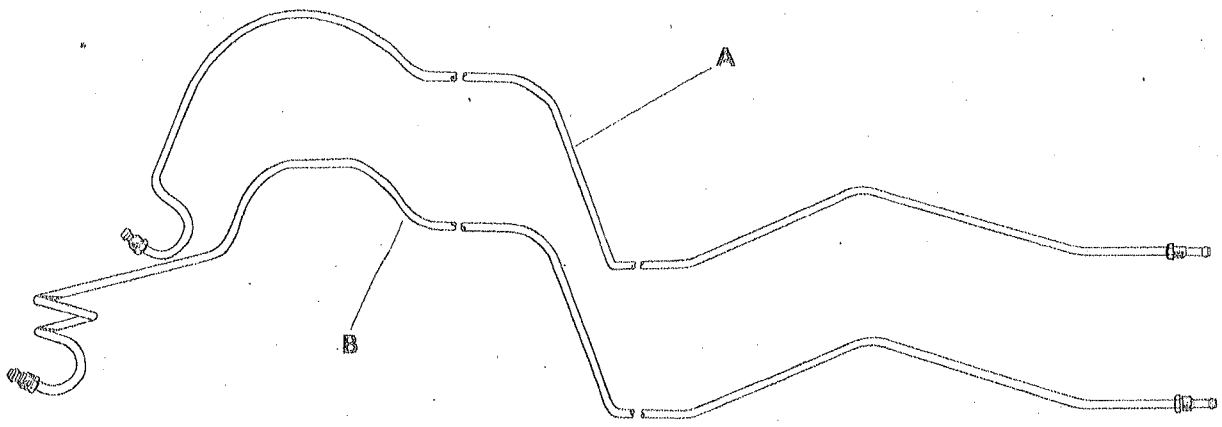

Fig. 2 STR 1296

Continued

A 30 DISTINGUISHING FEATURES—*continued*

tank self venting, and is an integral part of the tank (Fig. 1).

The petrol tank has been moved nearer to the back of the car, and the petrol pipe (tank end) has been lengthened from 57$\frac{7}{8}$" (147.0 cm.) A to 63$\frac{11}{32}$" (161.5 cm.) B to suit the repositioned petrol tank (Fig. 2).

The coil in the petrol tank has been reintroduced to facilitate assembly as there is no longer any possibility of the coil fouling the brake cross rod in the manner as described in this Journal, Volume 23, section "Fuel Tank", pages 9 and 10.

The new petrol tank and pipe cannot be used for replacements on the AS.3 series.

The exhaust pipe mounting has been modified to suit the new boot floor. The tail pipe has a new mounting bracket which requires an extra rubber mounting in addition to the one used on series AS.3. The new silencer and tail pipe assembly A will not interchange with the old one B (Fig. 3).

A new 3$\frac{1}{2}$ kilowatt heater is fitted as an optional extra in place of the recirculatory type which was an optional extra to series AS.3 (Fig. 4).

This change has necessitated repositioning the battery and starter switch, and altering the starter control cable and battery cables to suit. The new heater battery cables and starter control cable cannot replace those used on the AS.3 series.

SPECIAL NOTE:

On a few early A2S.4 cars the position of the starter switch bracket was such that the starter switch would have fouled the battery if the large type 38-ampere-hour battery (which is an optional extra) had been fitted. This was subsequently rectified by moving the position of the starter switch

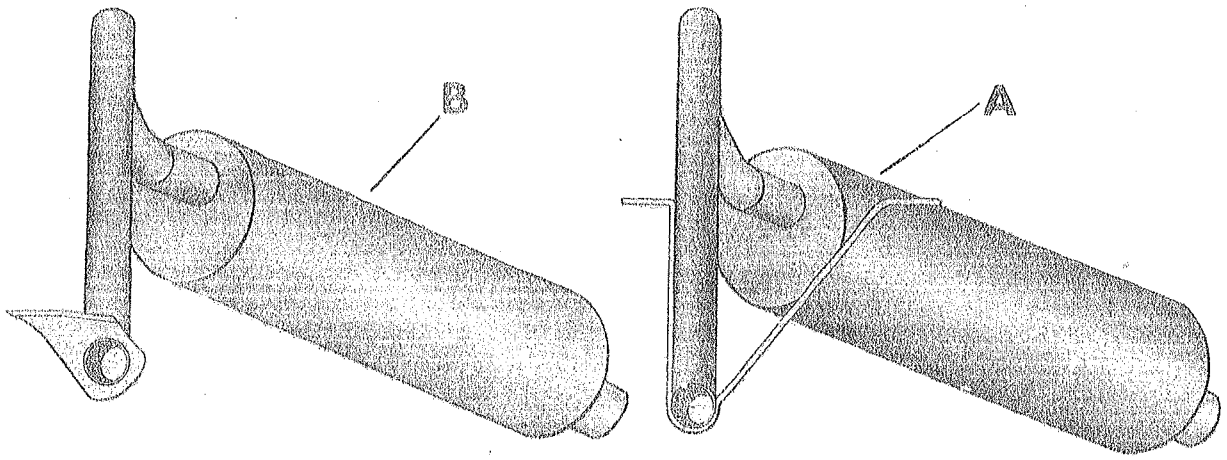

Fig. 3 STR 1297

Continued

A 30 DISTINGUISHING FEATURES—*Continued*

bracket ½" (12.7 mm.) rearwards and shortening the starter control cable from 9½" (24.13 cm.) to 9" (22.86 cm.) long. If it is desired to fit a larger battery on any of these cars, it will be necessary to remove the starter switch bracket by drilling out the spotwelds, and re-welding (or bolting) the bracket ½" (12.7 mm.) further back.

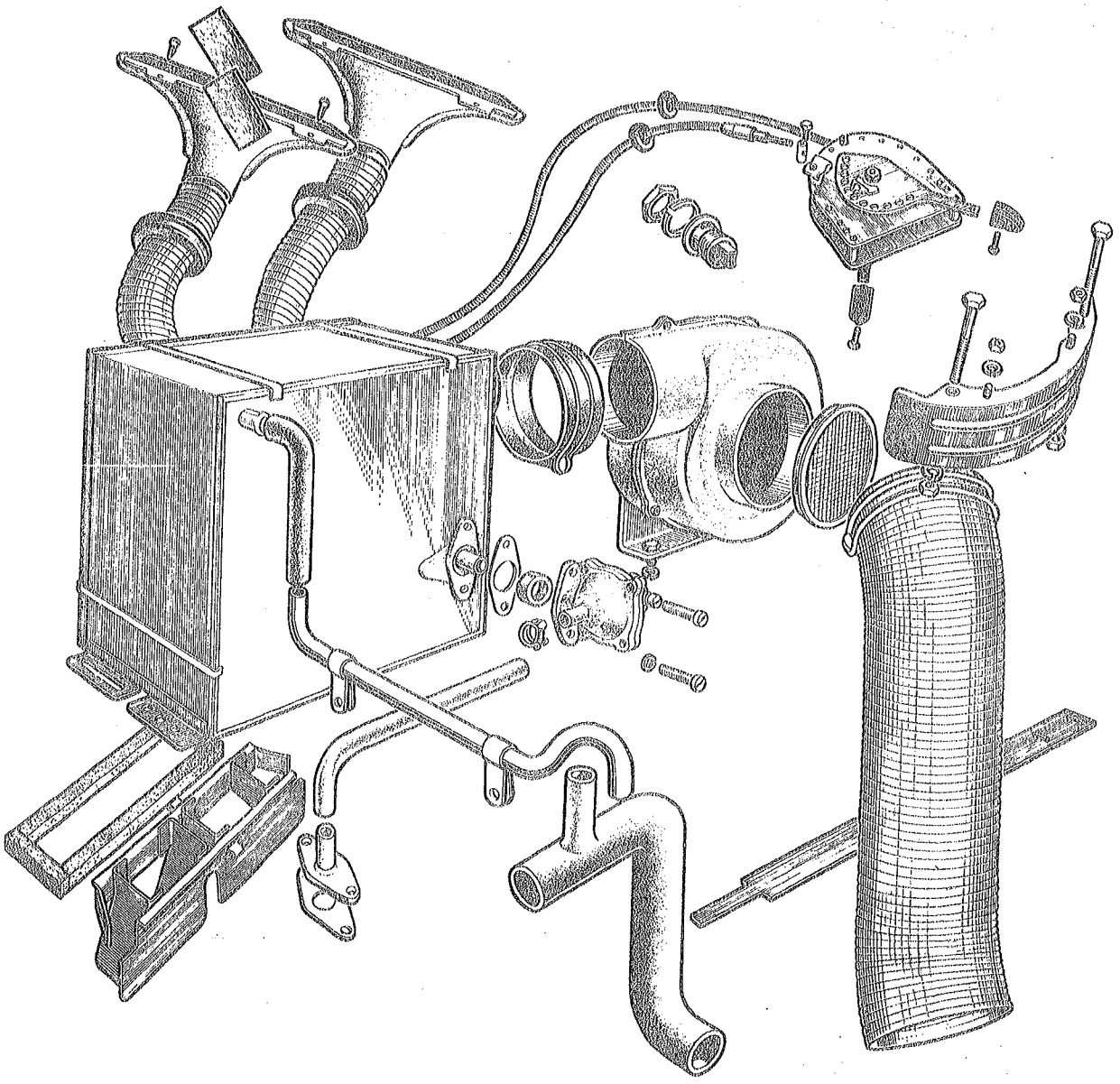

Fig. 4

STR 1287A

Continued

A 30 DISTINGUISHING FEATURES—*continued*

The instruments and instrument panel A have been re-designed; the speedometer B incorporates the fuel gauge, ignition, low oil pressure and

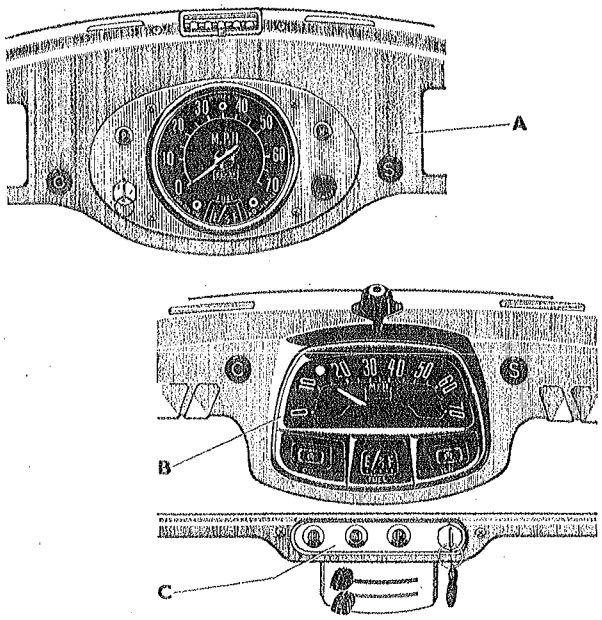

Fig. 5 *STR 1298*

high-beam warning lights. The panel switches remain unchanged but they have been repositioned at C (Fig. 5).

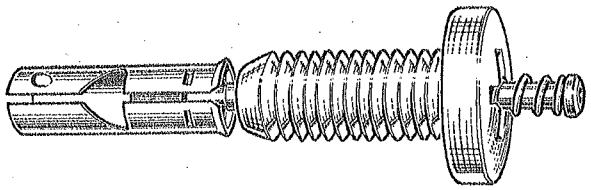

Fig. 6 *STR 1299*

An additional feature is the courtesy light, which operates automatically and lights up the floor of the car whenever either of the front doors open, the switch being built into a special door hinge screw (Fig. 6).

The main cable harness and chassis harness have been modified to suit the new arrangement. They will not interchange with those used on the AS.3 series.

The steering wheel has been re-designed to incorporate the horn push in the centre cap of the wheel instead of in the end of the lighting and dip switch. This has been accomplished by means of a brass slip-ring A, bolted into the hub

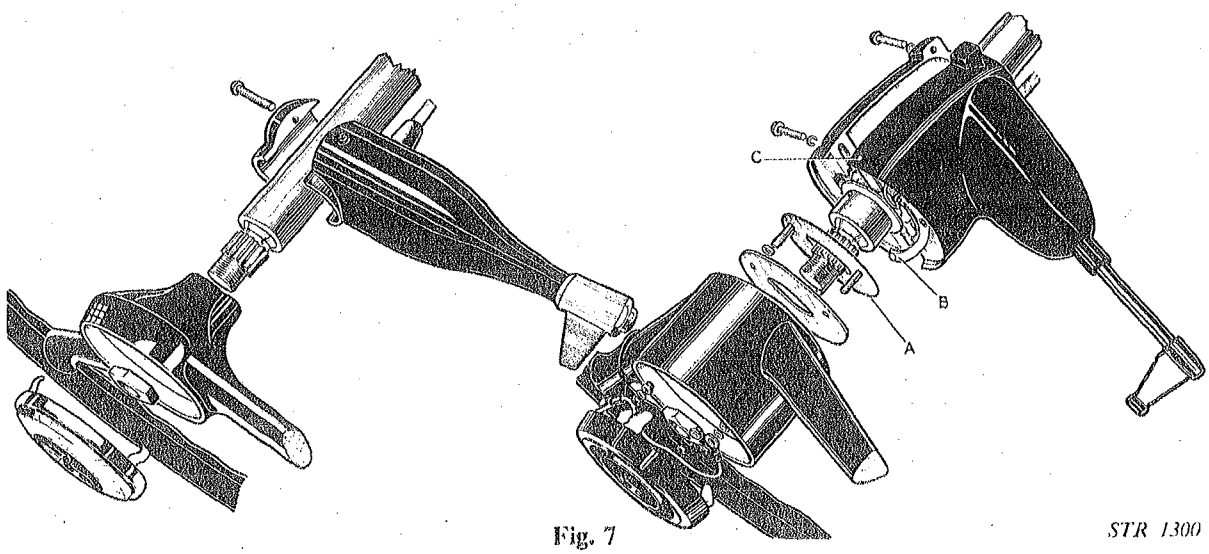

Fig. 7 *STR 1300*

Continued

A 30 DISTINGUISHING FEATURES—*continued*

of the steering wheel, which presses against a spring contact B on the new lighting and dip switch. In the new lighting and dip switch there is a small oil hole C for periodic lubrication of the steering column top bearing ; a few drops of light oil are all that is required (Fig. 7). The steering column has been shortened by $\frac{15}{16}$" (23.812 mm.) from $36\frac{1}{16}$" (91.6 cm.) to $35\frac{1}{8}$" (89.2 cm.), to improve the driving position.

The upper end of the outer column now incorporates a positive locational device for the lighting and dip switch. The new steering gear, steering wheel and lighting and dip switch are not interchangeable with the ones used on the AS.3 series.

Advantage has been taken of the extra clearance given by the re-designed dash panel to make the change speed lever more convenient to handle by reducing its length and making it more upright. The new change speed lever or the new gearbox assembly will not interchange with those used on the AS.3 series unless the new lever A is re-set as old lever B (Fig. 8).

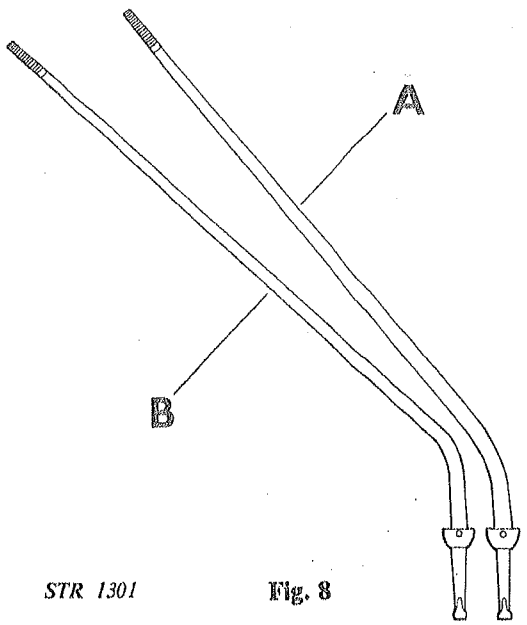

STR 1301 **Fig. 8**

The rear spring shackles have been increased in length from 2" (50.789 mm.) to $2\frac{3}{8}$" (60.324 mm.) between the spring pin centres B. This reduces the amount of angular movement by the shackle for any given deflection of the spring, and thereby improves the working conditions of the rubber spring bushes. In addition, to facilitate assembly, the length of thread A on the top shackle pin has been reduced from $\frac{3}{4}$" (19.05 mm.) to $\frac{9}{16}$" (14.287 mm.): it is secured with a single Simmonds nut instead of a plain nut with a locknut (Fig. 9).

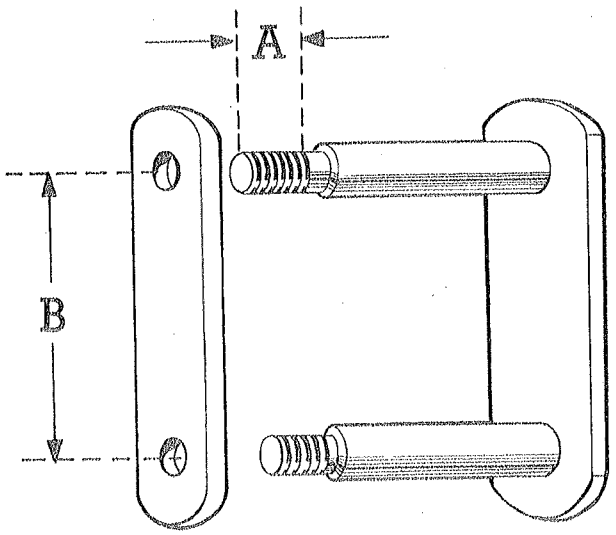

Fig. 9 *STR 1302*

The rear spring shackle, inner and outer, together with the Simmonds nut, can be used (in pairs only) to replace those used on AS.3 cars.

Improved new shock absorbers have also been fitted to prevent "fade". These can be used in pairs to replace the ones which were fitted to the AS.3 series.

Continued

A 30 DISTINGUISHING FEATURES—*Continued*

The clearances of the rear stabilising bar, from the propeller shaft and the body, have been made greater by increasing the radius and reducing the angle of the central bend on the stabiliser bar (Fig. 10). The new stabiliser bar A can be used to replace the original one B fitted to AS.3 cars.

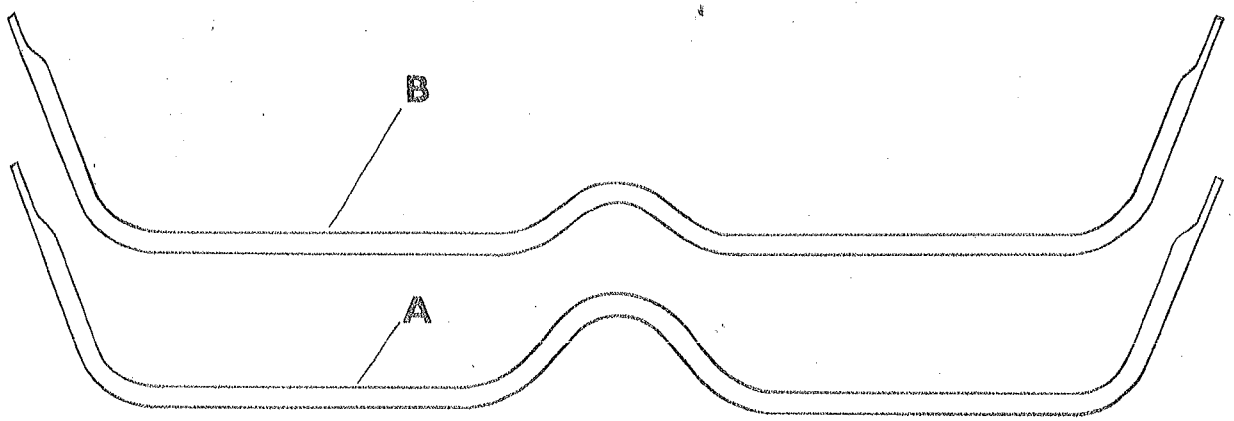

Fig. 10 STR 1303

INTERCHANGEABLE PARTS

The following parts have been superseded by new ones of modified design or material. These parts are interchangeable with their old counterparts and will be supplied for replacements when stocks of the old ones are exhausted.

SUMMARY OF ALTERATION

Description	Old Part	New Part	Type and Parts List Publication Number
Joint washer for oil reservoir	1B 1123	1B 2923	A 70 Pubs. 603A, p. 11, 730, p. 9, 780A, p. 9, 853, p. 9 16-H.P. Taxi Pub. 558A, p. 10 16-H.P. Hire-Car Pub. 728, p. 9
Joint washer for oil reservoir	1D 1283	1D 1944	A 125 Pubs. 430A, p. 9, 779, p. 10 A 135 Pub. 624, p. 8
Remarks: New joint washer provides a more adequate seal round front and rear main bearing studs. COMMENCING ENGINE NUMBERS:— A 125 . . . . . 10406 A 135 11945			

Description	Old Part	New Part	Type and Parts List Publication Number
Petrol tank strap	1B 2785	1B 2929	Austin-Healey 100
Remarks: Fibre pad on strap has been repositioned to facilitate assembly.			

COMMENCING CHASSIS NUMBERS:—

Austin-Healey 100, R.H. Steering . . 151608
L.H. Steering . . 151610

FOR YOUR RECORDS	PARTS LISTS
	STOCK CARDS
	PARTS ORDERED
	ALTERATIONS NOTED

Published April 26, 1954

AMENDMENTS TO LITERATURE

THE AUSTIN SERVICE JOURNAL, CARS—VOLUME 23

Section "Axle Front"

Page 1 Add the following data under Commencing Chassis Numbers:—

16-H.P. Hire-Car, R.H. Steering –	155737

Section "Axle Rear"

Page 12 Add the following data under Commencing Chassis Numbers:—

16-H.P. Hire-Car, R.H. Steering –	153579

Section "Steering"

Page 13 Add the following data under Commencing Chassis Numbers:—

A 40 Saloon, R.H. Steering	– –	822510
L.H. Steering	– –	822562
Coupé, R.H. Steering	– –	822595
L.H. Steering	– –	822664
Pick-Up, R.H. Steering	– –	822522
L.H. Steering	– –	824129
Van, R.H. Steering –	– –	822514
L.H. Steering –	– –	822525
Countryman, R.H. Steering	–	822537
L.H. Steering	–	824430

Page 14 Amend part number 7H 6433 for Anti-rattle Spring to read 7H 6432.

Amend part number 7H 6432 for Washer to read 7H 6433.

Page 17 Add the following data under Commencing Chassis Numbers:—

16-H.P. Hire-Car, R.H. Steering –	153579

Section "Suspension"

Page 8 Add the following data under Commencing Chassis Numbers:—

A 125 (Sheerline Limousine), L.H. Steering – – – –	10429

AUSTIN SERVICE JOURNAL, CARS—VOLUME 24

Section "Engine"

Page 1 Add the following data under Commencing Chassis Numbers:—

A 70 Saloon – – – – –	204884
Pick-Up – – – – –	174870

Continued

AMENDMENTS TO LITERATURE—*continued*

AUSTIN SERVICE JOURNAL, CARS—VOLUME 24

Section "Gearbox"

Page 16 Line 9. Delete 'B' after 'pegs'.

The illustrations appearing above Figures 24 and 25 have been positioned wrongly. Figure 24 refers to the illustration in the right hand column of the page and Figure 25 refers to the illustration in the left hand column of the page.

Page 17 At the bottom of the right hand column amend "2. Removing and refitting the operating piston and its housing" to read "2. Removing and refitting the accumulator piston and its housing".

Section "Suspension"

Page 5 Add the following data under Commencing Chassis Numbers:—

A 30 (AS.4)	R.H. Steering – – –	33953
	L.H. Steering – – –	33906
(A2S.4)	R.H. Steering – – –	33944
	L.H. Steering – – –	33966

A 40 SALOON PARTS LIST, PUBLICATION No. 884

Page 95 Amend item number 21 to read as follows:

Clip, $3\frac{9}{16}$" diameter – – 1 – 14G 799

Add after 14G 799,

Clip, air intake to heater – 1 – 3H 2940

A 40 COUPE PARTS LIST, PUBLICATION No. 884/1

Page 19 Amend item number 24 to read as follows:—

Clip, $3\frac{9}{16}$" diameter – – 1 – 14G 799

Add after 14G 799,

Clip, air intake to heater – 1 – 3H 2940

A 70 SALOON PARTS LIST, PUBLICATION No. 603A

Page 10 Amend part number 2K 5849 for Spring Washers (oil pump bottom cover), to read 2K 5894.

Published April 26, 1954

INTERCHANGEABLE PARTS

The following parts have been superseded by new ones of modified design or material. These parts are interchangeable with their old counterparts and will be supplied for replacements when stocks of the old ones are exhausted.

Description	Old Part	New Part	Type and Parts List Publication Number
Clutch Plate with linings	7H 3186	3H 3227	A 30 Pub. 883B, Engine, p. 17
Remarks: The clutch plate stop pins have been modified to reduce transmission noise. The stop pins are copper plated for identification purposes.			

Description	Old Part	New Part	Type and Parts List Publication Number
Adjusting Link for dynamo	1D 1277	2A 497	A 30 Pub. 883B, Engine, p. 16 A 40 Pub. 1099, Engine, p. 31
Remarks: Material change. COMMENCING ENGINE NUMBERS:— A 30 — — 49357 A 40 — — 958124			

FOR YOUR RECORDS	PARTS LISTS
	STOCK CARDS
	PARTS ORDERED
	ALTERATIONS NOTED

Published May 10 1954

AMENDMENTS TO LITERATURE

A 30 PARTS LIST, PUBLICATION No. 883B. Section "Engine".

Page 9. Amend part number 52K 303 for nuts for studs to read FNZ 506.

A 40 COUPE PARTS LIST, PUBLICATION No. 884/1.

Page 12. Add the following after Front Seat Assembly, left hand, 7H 9457 :—

Front Seat Frame Assembly, right hand	1	–	17H 156
Front Seat Frame Assembly, left hand	1	–	17H 157

A 70 PARTS LIST, PUBLICATION No. 603A.

Page 87. Amend part numbers as follows :—

Screen Glass (toughened plate)	1	–	4B 1839

to read :

Screen Glass (toughened plate)	1	–	4B 1840
Screen Glass (laminated plate)	1	–	4B 1840

to read :

Screen Glass (laminated plate)	1	–	4B 1839

THE AUSTIN SERVICE JOURNAL, CARS—VOLUME 23. Section "Electrical".

Page 16. Amend part number HZS 0405 for clamp bolt for bracket to read HZS 0406.

THE AUSTIN SERVICE JOURNAL, CARS—VOLUME 24. Section "Body".

Page 1. Amend part number 1G 3747 for Driving Mirror (frameless) less bracket to read 14G 3747.

Page 2. In the first sentence amend "wooden" floor to read "metal" floor. Under heading "Interchangeability" amend "wooden" floor to read "metal" floor.

INTERCHANGEABLE PARTS

The following parts have been superseded by new ones of modified design or material. These parts are interchangeable with their old counterparts and will be supplied for replacements when stocks of the old ones are exhausted.

Description	Old Part	New Part	Type and Parts List Publication Number
Clutch Plate with linings	7H 3077	7H 3201	AS.1, Pub. 371, p. 15
Clutch Plate with linings	7H 3186	7H 3201	A 30, Pub. 883B, Engine, p. 17
Clutch Plate with linings	7H 3227	7H 3201	
Remarks: Introduction of a clutch plate suitable for both cars to facilitate service.			

Description	Old Part	New Part	Type and Parts List Publication Number
Petrol Filler Cap	2A 184	2A 5381	A 30, Pub. 883B, Petrol Tank, p. 1
Remarks: New filler cap has a chromium plated finish.			

Description	Old Part	New Part	Type and Parts List Publication Number
Tension Spring for seat lock Assembly .	14G 1781	14G 4732	A 40, Pub. 1099, Seats, p. 2. A 70
Remarks: Stronger spring.			

Description	Old Part	New Part	Type and Parts List Publication Number
Drain Plug for petrol tank	2F 4249	2A 380	A 40, Austin-Healey 100, Petrol Tank, p. 1. A 70
Washer	2F 4250	6K 638	
Remarks: Modified drain plug with an "undercut" at the base of the thread. Use with 6K 638.			

Continued

FOR YOUR RECORDS	PARTS LISTS
	STOCK CARDS
	PARTS ORDERED
	ALTERATIONS NOTED

INTERCHANGEABLE PARTS—*continued*

Description	Old Part	New Part	Type and Parts List Publication Number
Front Door Casing, right hand . . .	4B 1183	4B 1228	A 70, Pub. 780A, p. 81
Front Door Casing, left hand	4B 1184	4B 1229	
Rear Door Casing, right hand	4B 1185	4B 1230	
Rear Door Casing, left hand	4B 1186	4B 1231	
Remarks: The new type door casing can be used to replace the old type, providing holes are drilled in the casing to accept the screws, see this Journal, Volume 23, section "Body", pages 37 and 61.			

Description	Old Part	New Part	Type and Parts List Publication Number
Joint Washer for oil reservoir	1B 1123	1B 2923	A 70, Pubs. 603A, p. 11 730, p. 9 780A, p. 9 853, p. 9 A 90, Pub. 787, p. 10 Taxi, Pub. 558A, p. 10 Hire-Car, Pub. 728, p. 9 Austin-Healey 100, Pub. 1050, Engine, p. 8
Joint Washer for oil reservoir	1D 1283	1D 1944	A 125, Pubs. 430A, p. 9 779, p. 10 A 135, Pub. 624, p. 8
Remarks: New joint washer provides a more adequate seal around main bearing studs. COMMENCING ENGINE NUMBERS:— A 125 – – 10406			

AMENDMENTS TO LITERATURE

A 30 PARTS LIST, PUBLICATION No. 883B, Section "Boot".

Page 1. Amend part number 3H 5478 for Lock Cover and Escutcheon to read 3A 5478.

A 40 PARTS LIST, PUBLICATION No. 1099, Section "Engine".

Page 23. Amend part number 7H 903 for Repair Kit for pump to read P 147.

Section "Gearbox".

Page 4. Delete item 25:—

CD 71—Dust Cover – 1 – 1G 3420

Add:—

Saloon C.	601669–601686 606355–606462 606950–606961 607675–608000 609061–609131 609260–845028	CD 71—Dust Cover	1	1G 3420
Commercial C.	609133–845033			
Sports C.	614776–753428			

Remarks: Dust Cover no longer fitted.

Section "Controls".

Page 7. Amend part number 1G 3272 for bushes in gearbox to read ALT-136.

Section "Doors".

Page 5. Add under 4G 7735 Private Locking Device, the following:—

Weathershield for private locking device	1	14G	1789
Split pin for weathershield – –	1	2K	1381

Section "Casings".

Page 3. Add after 4G 2119 Parcel Tray, the following:—

Clips – – – –	5	– 14A	2641

AUSTIN-HEALEY "100", PUBLICATION No. 1050. Section "Controls",

Page 3. Amend part number 1B 8817 for clutch pedal pad, R.H. Steering to read 1B 8750.

Continued

FOR YOUR RECORDS	PARTS LISTS
	STOCK CARDS
	PARTS ORDERED
	ALTERATIONS NOTED

AMENDMENTS TO LITERATURE—*continued*

AUSTIN-HEALEY "100"
PUBLICATION No. 1050—*continued.*

Section "Controls".

Page 3. Item 47—Amend:—

Nut	1	2K 3978

to read:—

Nut, B.S.F. (R.H. Steering)	1	2K 3978

Add:—

Nut, U.N.F. (L.H. Steering)	1	FNZ 107

A 70 SCHEDULE OF REPAIR CHARGES,
PUBLICATION No. 1084.

Page 7. Amend repair charge for operation number EE 10 (Side lamp bulb, remove and refit) to read 2/- instead of 6/- for BS.3, BK.3 and BW.4.

A 125 and A 135,
SCHEDULE OF REPAIR CHARGES,
PUBLICATION No. 1086.

Page 2. Amend repair charge for operation number E 23 (Remove and refit radiator) to read £2 2s. 0d. instead of £1 16s. 0d. for A 125 and A 135.

Page 7. Amend repair charge for operation number B3 (Adjust brakes, including bleeding) to read 12/- instead of 6/- for A 125 and A 135.

Page 8. Amend repair charge for operation number BM 3 (Remove and refit radiator cowl) to read £1 16s. 0d. instead of £2 2s. 0d. for A 125 and A 135.

THE AUSTIN SERVICE JOURNAL,
CARS—VOLUME 20.
Section "Transmission".

Page 19. Add the following Commencing Chassis Number:—

A 125, R.H. Steering	10501

THE AUSTIN SERVICE JOURNAL,
CARS—VOLUME 23.
Section "Axle—Front".

Page 1. Add the following data under "Commencing Chassis Numbers":—

Hire-Car, R.H. Steering	155737

THE AUSTIN SERVICE JOURNAL,
CARS—VOLUME 24.
Section "Engine".

Page 1. Add the following data under "Commencing Engine Numbers":—

A 70 Saloon	204884
A 70 Pick-Up	174870

Page 6. Add the following data under "Commencing Chassis Numbers":—

A 125, L.H. Steering	10480

Page 25. Amend Adaptor for oil filter (use 11B 190 with 2K 3150 setscrews) to read Adaptor for oil filter (use 11B 190 with 2K 3174 setscrews).

Continued

AMENDMENTS TO LITERATURE—*continued*

THE AUSTIN SERVICE JOURNAL,
CARS—VOLUME 24—*continued.*

Section "Repairs Data".

Page 28. Amend time cycle for operation E 23 (Remove and refit radiator) to read 3½ hours instead of 3 hours for A 125 and A 135.

Page 31. Amend time cycle for operation number B 3 (Adjust brakes, including bleeding as necessary) for A 125 and A 135 to read 1 hour instead of ½ hour.

Page 32. Amend time cycle for operation BM 3 (Remove and refit radiator cowl) to read 3 hours instead of 3½ hours for A 125 and A 135.

Section "Stores Data".

Page 14. Amend part number 3H 3227 in new part number column to read 7H 3227.

INTERCHANGEABLE PARTS

The following parts have been superseded by new ones of modified design or material. These parts are interchangeable with their old counterparts and will be supplied for replacements when stocks of the old ones are exhausted.

Description	Number per Vehicle	Austin Part Number	Parts List Publication Number
Piston with rings and gudgeon pin (standard) . .	4	2A 469	Pub. 883B, "Engine" p. 5
Piston with rings and gudgeon pin (.010″ o/s) . .	4	2A 469F	
Piston with rings and gudgeon pin (.020″ o/s) . .	4	2A 469A	
Piston with rings and gudgeon pin (.030″ o/s) . .	4	2A 469B	
Piston with rings and gudgeon pin (.040″ o/s) . .	4	2A 469D	
Remarks: New pistons, alternative in sets to 2A 207 and 2A 360, now being fitted.			

FOR YOUR RECORDS	PARTS LISTS
	STOCK CARDS
	PARTS ORDERED
	ALTERATIONS NOTED

Issue 7 *Published July 19, 1954*

INTERCHANGEABLE PARTS

The following parts have been superseded by new ones of modified design or material. These parts are interchangeable with their old counterparts and will be supplied for replacements when stocks of the old ones are exhausted.

Description	Old Part	New Part	Type and Parts List Publication Number
Door Weatherstrip, right hand	14A 2833	14A 3483	A 30, Pub. 883B/1, Weatherstrips, p. 17
Door Weatherstrip, left hand	14A 2834	14A 3484	
Remarks: Weatherstrip modified to facilitate assembly.			

Description	Old Part	New Part	Type and Parts List Publication Number
Ash Tray Assembly } Alternatives Ash Tray Assembly }	4B 6930 *14B 1557	14B 1691	A 40, Pub. 1099, Body Equipment, p. 3 Pub. 884/1, p. 15
Remarks: Fixing screw now part of main assembly. * Not previously listed to be added to Parts List.			

Description	Old Part	New Part	Type and Parts List Publication Number
Demister "Y" Piece	*4G 7423	4G 8435	A 40, Pub. 1099, Heater, p. 3 Pub. 884/1, p. 19
Remarks: Material change. * Not previously listed, to be added to Parts List.			

Continued

FOR YOUR RECORDS	PARTS LISTS
	STOCK CARDS
	PARTS ORDERED
	ALTERATIONS NOTED

INTERCHANGEABLE PARTS—*continued*

Description	Old Part	New Part	Type and Parts List Publication Number
Ball Pins	1B 3410	8G 633	A 40, Pub. 1099, Controls, p. 28 A 70, Pubs. 730, p. 22, 780A, p. 25 16-H.P. Taxi, Pub. 558A, p. 18
Ball Pins	1D 3593	8G 634	A 125, Pubs. 430A, p. 22, 779, p. 24 A 135, Pub. 624, p. 22
Remarks: Part number change only to assist records.			

Description	Old Part	New Part	Type and Parts List Publication Number
Grease Gun with adaptor	2H 3735	—	A 40, Pub. 1099, Tools, p. 1 A 70, Pubs. 780A, p. 67, 853, p. 63
Grease Gun with adaptor	—	1G 9346	
Adaptor for 1G 9346	—	1G 9348	
Grease Gun with adaptor	—	3H 3103	
Adaptor for 3H 3103	—	3H 3075	
Grease Gun with adaptor	2H 4664	—	A 125, Pubs. 430A, p. 71, 779, p. 82 A 135, Pub. 624, p. 76
Grease Gun with adaptor	—	1G 9346	
Adaptor for 1G 9346	—	1G 9348	
Grease Gun with adaptor	—	3H 3103	
Adaptor for 3H 3103	—	3H 3075	
Remarks: Introduction of two new grease guns as alternatives.			

Continued

INTERCHANGEABLE PARTS—*continued*

Description	Old Part	New Part	Type and Parts List Publication Number
Gear Carrier with differential case and gears .	B3–174	1B 7335	A 70, Pub. 780A, p. 45 A 90, Pub. 787, p. 50
Remarks: Part number change only to assist records.			

Description	Old Part	New Part	Type and Parts List Publication Number
Oil Seal	1D 3561	3H 2118	A 125, Pubs. 430A, p. 24, 779, p. 27 A 135, Pub. 624, p. 25
Remarks: Part number change only.			

Description	Old Part	New Part	Type and Parts List Publication Number
Flexible Hose Demister, 14″ long	4G 9761	14B 3790	Austin-Healey 100, Pub. 1050, Heater, p. 1
Flexible Hose Demister, 12″ long	4G 9762	14B 3791	
Remarks: Change of material only.			

AMENDMENTS TO LITERATURE

A 30 PARTS LIST, PUBLICATION No. 883B. Section "Engine".

Page 11. Amend item number 7 to read as follows:—
Studs for inlet and exhaust manifold – – – 4 – 52K 487
Cancel the following:—
Studs, outer for inlet and exhaust manifolds – – 2 – 52K 488

Page 16. Amend part number 52K 1566 for Bolt to bracket to read HBZ 0509.

A 30 PARTS LIST, PUBLICATION No. 883B/1.

Page 6. Add the following after Tonneau filler panel, left hand, 14A 678:—
Panel, rear, lower and apron assembly – – 1 – 14A 2420

A 30 PARTS LIST, PUBLICATION No. 883B/3.

Page 3. Add the following after Tonneau assembly, 14A 42:—
Panel, rear, lower and apron assembly – – – 1 – 14A 2420

A 30 PARTS LIST, PUBLICATION No. 883/4.

Page 19. Amend part number 14A 2561 for Brackets, front seat pivot tube, to rear 14A 2861.

Continued

AMENDMENTS TO LITERATURE—*continued*

A 40 SALOON PARTS LIST, PUBLICATION No. 1099.

Section "Engine".

Page 33. Amend part number 7H 3063 for Pressure plate to read 7H 3057.

Section "Heater".

Page 3. Add the following after item 8:—

Plugs, when fixing straps for heater are not fitted	–	2	– 3H 926

AUSTIN-HEALEY 100 PARTS LIST, PUBLICATION No. 1050.

Section "Boot".

Page 1. Cancel the following:—

Packing blocks for petrol tank – – – –		2	– 14B 2502

Section "Bumpers".

Page 1. Add the following:—

Front number plate with brackets (Home Market only) – – – –		1	– 1B 8937
Rear Number Plate – –		1	– 1B 8940
Bolts to bracket – –		2	– HZS 0404
Nuts for bolts – –		2	– FNZ 104
Plain washers – –		2	– PWZ 204
Spring washers – –		2	– LWZ 204

(For Rear Number Plate Bracket, refer to Body Equipment, page 1.)

Section "Electrical".

Page 1. Amend part number 2H 3061 for Speedometer, miles, to read 3H 2061.

Section "Engine".

Page 1. Add the following after item 1:—

Short Block Assembly, cylinder block with pistons, connecting rods, crankshaft and bearings only	–	1	– 8G 273

Page 14. Delete the following which has been listed in error:—

Pulley for fan and water pump	Export (hot climates)	1	– 1B 2172
Distance piece		1	– 1B 2173

16-H.P. HIRE-CAR PARTS LIST, PUBLICATION No. 728.

Page 9. Amend part number 1B 1375 for Dust Cap to read 1B 1735.

A 125 PARTS LIST, PUBLICATION No. 430A

Page 82. Amend item 17:—

Sealing Rubbers – –		2	– 8D 2892

to read:—

Sealing Rubber, right hand	–	1	– 8D 2892

Add:—

Sealing Rubber, left hand	–	1	– 8D 6559

continued

AMENDMENTS TO LITERATURE—*continued*

A 30 SCHEDULE OF REPAIR CHARGES, PUBLICATION No. 1082.	Page 3.	Amend repair charge for operation number R.A.5 (remove and refit hub oil seal, one side only) to read 12s. 6d. instead of 9s. In the description for operation number R.A.4 the word "bearings" should read "bearing".
A 40 SCHEDULE OF REPAIR CHARGES, PUBLICATION No. 1083.	Page 3.	Amend the description of operation number E.30 to read "Remove, overhaul and refit water pump".
	Page 4.	Amend repair charge for operation number R.A.5 (remove and refit hub oil seal, one side only) to read 12s. 6d. instead of 9s. in all three columns.
A 70 AND A 90 SCHEDULE OF REPAIR CHARGES, PUBLICATION Nos. 1084 AND 1085.	Page 3.	Amend repair charge for operation number R.A.5 (remove and refit hub oil seal, one side only) to read 12s. 6d. instead of 9s. in both columns. Amend the description of operation number R.A.4 to read "Remove and refit hub bearing, one side only".
THE AUSTIN SERVICE JOURNAL, CARS—VOLUME 24, Section "Body".	Page 3.	Amend part number 2K 4345 for Screws, to read 2K 3835. Add the following after Luggage Floor Assembly 4G 2384:— Felts for side panels – 2 – 14G 4570
Section "Engine".	Page 18.	Add the following data for Connecting Rod Bolts under "Commencing Engine Numbers":— A 125 Sheerline – – – – 11996
Section "Suspension".	Page 16.	Amend item 3 to read:— *Rear Shock Absorber, right hand (use 1G 9629 in pairs) 1 – 3H 2860 Amend item 4 to read:— *Rear Shock Absorber, left hand (use 1G 9631 in pairs) 1 – 3H 2862

INTERCHANGEABLE PARTS

The following parts have been superseded by new ones of modified design or material. These parts are interchangeable with their old counterparts and will be supplied for replacements when stocks of the old ones are exhausted.

Description	Old Part	New Part	Type and Parts List Publication Number
Inlet manifold with plug .	2A 107	2A 538	A 30 Pub. 883B, Engine, p. 11
Remarks: Manifold now has a boss which can be tapped to provide a connection for a suction operated windscreen washer.			

Description	Old Part	New Part	Type and Parts List Publication Number
Differential shafts . . .	1B 7231	1B 7475	A 70, Pub. 780A, p. 46 A 90, Pub. 787, p. 52
Remarks: Higher grade material.			

Description	Old Part	New Part	Type and Parts List Publication Number
Valve oil seals. . . .	AEF 112	AEK 113	A 70, Pubs. 780A, p. 5 853, p. 5 A 125, Pubs. 430A, p. 5 779, p. 5 A 135, Pub. 624, p. 5 Taxi, Pub. 558A, p. 5 Hire-Car, Pub. 728, p. 5
Remarks: Improved seal to reduce oil consumption			

Description	Old Part	New Part	Type and Parts List Publication Number
Windscreen bottom weather strip	14B 1863	14B 3778	Austin-Healey 100 Pub. 1050, Windscreen, p. 1
Remarks: Modified section to give improved protection against the weather			

FOR YOUR RECORDS	PARTS LISTS
	STOCK CARDS
	PARTS ORDERED
	ALTERATIONS NOTED

AMENDMENTS TO LITERATURE

A 30 PARTS LIST, PUBLICATION 883B/2.

Page 24. Amend item 24.

Washers for nuts – –	6	–	2K 5319

to read:—

Washers (plain) for nuts –	6	–	PWZ 105

Add after item 24.

Shakeproof washers – –	6	–	2K 8606

A 40 PARTS LIST, PUBLICATION 1099. Section "Gearbox"

Page 15. Amend item 6.

Setscrews ($\frac{3}{8}$" B.S.F. × $\frac{5}{8}$" long), mounting plate to crankcase – – –	8	–	2K 3136

To read:—

Setscrews ($\frac{3}{8}$" B.S.F. × $\frac{5}{8}$" long) mounting plate to crankcase – – –	8	–	2K 6404

Remarks: Improved material. Commencing—Engine Number 986275.

AUSTIN-HEALEY 100, PUBLICATION 1050. Section "Engine".

Page 15. Add after item 3:—

Rubber cover for petrol pump	1	–	11B 2003

Remarks: Protection against weather. Commencing—Chassis Number 160315.

Page 16. Amend item 17.

Joint washer to crankcase	1	–	1B 123

To read:—

Joint washers to crankcase and oil filter – –	2	–	1B 12

Section "Electrical".

Page 4. Amend part number 3B 50 for Grommet, flasher cable through dash, to read 11G 2053.

Continued

FOR YOUR RECORDS	PARTS LISTS
	STOCK CARDS
	PARTS ORDERED
	ALTERATIONS NOTED

AMENDMENTS TO LITERATURE—*continued*

AUSTIN-HEALEY 100, PUBLICATION 1050. Section "Windscreen".	Page 1.	Cancel item 9. Shouldered screws – – 2 – 14B 1861 Add after item 15:— Windscreen security spring assembly – – – 1 – 4B 5389
Section "Body Equipment".	Page 1.	Add after item 13 the following:— Plugs, front bumper apron panel – – – – 2 – 3H 926
16-H.P. HIRE-CAR, PUBLICATION 728.	Page 50.	Amend part number ALT-14 for Clips for rubber connection, water outlet pipe to radiator to read 8G 632. Amend part number ALT-14 for Clips for rubber connection, radiator to water pump to read 8G 632.
16-H.P. TAXI, PUBLICATION 558A.	Page 48.	Amend part number ALT-14 for Clips for rubber connection, water outlet pipe to radiator to read 8G 632. Amend part number ALT-14 for Clips for rubber connection, radiator to water pump to read 8G 632.
THE AUSTIN SERVICE JOURNAL, CARS—VOLUME 24, Section "Stores Data".	Page 6. Page 25.	In the left hand column, line 8, amend the word "tank" to read "pipe". Delete the words "in pairs" after part numbers 1G 1629 and 1G 1631.

SPECIAL AMENDMENT

DUAL STEERING CONTROL

A 40 Somerset

In the A 40 Parts List, Volume 1, Publication 1099, a list of special parts (including standard L.H. Steering parts) is given to enable an A40 Somerset Saloon, R.H. Steering, to be converted to dual steering control. As this model is now out of production the special parts (NOT normal L.H. steering parts) are not now available. Therefore the last page in the parts list, namely "Special Parts 1" is now cancelled.

INTERCHANGEABLE PARTS

The following parts have been superseded by new ones of modified design or material. These parts are interchangeable with their old counterparts and will be supplied for replacements when stocks of the old ones are exhausted.

Description	Old Part	New Part	Type and Parts List Publication Number
Licence holder	14G 1761	14G 5824	A 30 Pubs. 883B, Body Equipment, p. 1 883B/1, p. 22 883B/3, p. 16 883B/4, p. 20 A 40 Pub. 1099, Body Equipment, pp. 1/2
Remarks: Alternative type.			

Description	Old Part	New Part	Type and Parts List Publication Number
Pistons with rings and gudgeon pin .	1B 2376	11B 200	A 70 Pubs. 780A, p. 4 853, p. 4 16-H.P. Taxi Pub. 558A, p. 4 16-H.P. Hire-Car Pub. 728, p. 4
Remarks: Material change. COMMENCING ENGINE NUMBERS:— A 70 – – – – 215001 16-H.P. Taxi – – – 211001 16-H.P. Hire-Car – – 211030			

Description	Old Part	New Part	Type and Parts List Publication Number
Sealing rubbers for petrol tank mounting	14B 2503	14B 2852	Austin-Healey 100 Pub. 1050, Boot, p. 1
Remarks: Improved method of sealing.			

Continued

FOR YOUR RECORDS	PARTS LISTS
	STOCK CARDS
	PARTS ORDERED
	ALTERATIONS NOTED

Published November 29, 1954

INTERCHANGEABLE PARTS—*continued*

Description	Old Part	New Part	Type and Parts List Publication Number
Cylinder head with valve guides, core plugs and studs	D2-78	68G 141	A 135 Pub. 624, p. 5
Cylinder head with valve guides, core plugs and studs	D2-116	68G 141	
Cylinder head with valve guides, core plugs and studs	H7-141	68G 141	
Remarks: 68G 141 is a conversion set and includes two different sets of valve rocker bracket studs.			

Description	Old Part	New Part	Type and Parts List Publication Number
Cylinder head with valve guides, core plugs and studs	D2-14	68G 140	A 125 Pubs. 430A, p. 5 779, p. 5
Cylinder head with valve guides, core plugs and studs	D2-111	68G 140	
Cylinder head with valve guides, core plugs and studs	H7-139	68G 140	
Cylinder head conversion set to suit engine sling brackets	D2-173	68G 140	
Remarks: 68G 140 is a conversion set and includes two different sets of valve rocker bracket studs.			

AMENDMENTS TO LITERATURE

A 30 PARTS LIST, PUBLICATION 883B.
Section "Doors"

Page 5. Delete the following:—

Frame	1	— 14A	578
Glass channel	1	— 14A	582
Sealing rubber	1	— 14A	585
Finishing channel	1	— 14A	587
Frame	1	— 14A	579
Glass channel	1	— 14A	583
Sealing rubber	1	— 14A	586
Finishing channel	1	— 14A	570
Frame	1	— 14A	661
Glass channel	1	— 14A	665
Sealing rubber	1	— 14A	668
Frame	1	— 14A	662
Glass channel	1	— 14A	666
Sealing rubber	1	— 14A	669

Remarks: Cannot be serviced.

Continued

AMENDMENTS TO LITERATURE—*continued*

A 30 PARTS LIST, PUBLICATION 883B.
Section "Electrical"

Page 6. Add after item 20 the following:—

Cable, inner – – –	1	– 14A	874

Section "Tools"

Page 1. Add after item 23 the following:—

Paint touch-up pencil –	1	– 2A	5377

Remarks: When ordering state colour required.

A 30 PARTS LIST, PUBLICATION 883B/1.

Page 11. Delete the following:—

Lock with outside locking device, right hand – –	1	– 14A	2520
Remote control, right hand–	1	– 14A	2455
Connecting link, right hand	1	– 14A	2453
Lock, left hand – – –	1	– 14A	2521
Remote control, left hand –	1	– 14A	2456
Connecting link, left hand –	1	– 14A	2454

Remarks: Cannot be serviced.

Page 20. Amend item 41, part number 14G 799 for Clip for sleeve to read 14G 5630.

A 30 PARTS LIST, PUBLICATION 883B/2.

Page 13. Add after item 15 the following:—

Cable, inner – – –	1	– 14A	2597

Page 27. Amend the Chassis Range column for part number 14G 4782 to read:—

AS.4 R.H.S. C.25631–76817
L.H.S. C.33906–74741
A2S.4 R.H.S. C.25621–76795
L.H.S. C.33715–77089

Add after item 8 the following:—

AS.4 R.H.S. C.76818 on L.H.S. C.74742 on A2S.4 R.H.S. C.76796 on L.H.S. C.77090 on	Tool Kit – Hold-All	1 – 14A	234

Continued

AMENDMENTS TO LITERATURE—*continued*

A 30 PARTS LIST, PUBLICATION 883B/3.

Page 8. Delete the following:—

Frame	1	–	14A	2770
Glass channel	1	–	14A	2772
Sealing rubber	1	–	14A	2774
Finishing channel	1	–	14A	587
Frame	1	–	14A	2771
Glass channel	1	–	14A	2773
Sealing rubber	1	–	14A	2775
Finishing channel	1	–	14A	570
Frame	1	–	14A	2794
Glass channel	1	–	14A	2796
Sealing rubber	1	–	14A	2800
Finishing channel	1	–	14A	2802
Frame	1	–	14A	2795
Glass channel	1	–	14A	2797
Sealing rubber	1	–	14A	2801
Finishing channel	1	–	14A	2803

Remarks: Cannot be serviced.

Page 14. Amend part number 14A 2875 for Control unit gear angle bracket to read 14A 2786.

Page 15. Amend item 42, part number 14G 799 for Clip for sleeve to read 14G 5630.

A 30 PARTS LIST, PUBLICATION 883B/4.

Page 12. Amend part number 14A 2467, for Spring for regulators to read 14A 3508.

Page 20. Amend item 27, part number 14G 799 for Clip for sleeve to read 14G 5630.

A 40 PARTS LIST, PUBLICATION 1099.
Section "Boot".

Page 3. Add after item 4 the following:—

Luggage floor conversion set	1	–	G4	444

Section "Heater"

Page 3. Amend item 26,

Clips, 3 1/16" diameter	2	–	2H	455

to read:—

Clip, 3½" diameter	1	–	14G	5630
Clip, air intake to heater	1	–	3H	2940

Section "Mudwings"

Page 2. Add the following after item 24:—

Saloon C.286001–657000	Rear wing, right hand	1	–	4G	872
	Rear wing, left hand	1	–	4G	873

A 70 PARTS LIST, PUBLICATION 780A.

Page 67. Add the following:—

Paint touch-up pencil	1	–	2A	5377

Remarks: When ordering state colour required.

Continued

AMENDMENTS TO LITERATURE—*continued*

A 70 PARTS LIST, PUBLICATION 780A

Page 95. Amend item 12 for Clips for hose 1⅛" diameter – – – 2 – 14G 799
To read:—
Clips for hose 3½" diameter – 2 – 14G 5630

A 70 PARTS LIST PUBLICATION 853/1.

Page 21. Amend item 22
Clips for hose 3⅛" diameter 2 – 14G 799
To read:—
Clips for hose 3½" diameter – 2 – 14G 5630

AUSTIN-HEALEY 100 PARTS LIST. PUBLICATION 1050.
Section "Body Equipment"

Page 1. Add the following:—
Rubber buffers for blanking fixing holes for brake fluid container, R.H. Steering – 2 – 3H 926

Section "Body Shell"

Page 1. Add after item 24 the following:—
Rubber buffers – – 2 – 14B 766

Section "Bonnet"

Page 1. Add after part number 14B 1850 the following:—
Radiator grille – – – 1 – 14B 4568
Radiator grille surround – 1 – 14B 4569
Screws, self-tapping – – 12 – PTZ 602

Section "Bumpers"

Page 1. Add after item 13:—
Rubber grommet, rear bumper spring bar to body, right hand – – 1 – 1A 9307
Rubber grommet, rear bumper spring bar to body, left hand – – 1 – 1A 9308

Section "Electrical"

Page 1. Amend item 10 to read:—
To C.156839 (Fixing rods, B.S.F. thread) – – 4 – 3H 3057
Add after item 10:—
C.156840 Fixing rods,
U.N.F. thread – – 4 – 1B 2906
Washers – – – 4 – 1B 2907
Washers – – – 4 – 2K 9420
Spring washers – – 4 – 2K 2543

Continued

AMENDMENTS TO LITERATURE—*continued*

AUSTIN-HEALEY 100 PARTS LIST, PUBLICATION 1050.
Section "Electrical"

Page 5. Add after item 30:—

Rubber rings for side lamp cables	2	– 2H	35

Section "Seats"

Page 1. Amend the quantity of part number 14B 2881, for Washer plates to read 4 instead of 6.
Add the following, after:—

Plain washers (small)	9	– PWZ	104
Plain washers	3	– PWZ	106

Commencing Chassis Number:—
R.H. Steering – 144659
L.H. Steering – 154660

A 125 PARTS LIST, PUBLICATION 430A

Page 71. Add the following:—

Paint touch-up pencil	1	– 2A	5377

Remarks: When ordering state colour required.

THE AUSTIN SERVICE JOURNAL, Cars—Volume 24.
Section "Body"

Page 3. Add under 2K 1209, for Spring washer, in Summary of Alteration panel:—

Support trunk floor, side, right hand	1	– 4G	4999
Support trunk floor, side, left hand	1	– 4G	5450
Support trunk floor, front	1	– 4G	5451
Reinforcement for front support floor	1	– 14G	3794
Stiffener, wheelarch to rear mounting	1	– 4G	9913
Stiffener, wheelarch to rear mounting	1	– 4G	9914
Stiffener, wheelarch to rear mounting (rear)	1	– 4G	9915
Stiffener, wheelarch to rear mounting (rear)	1	– 4G	9916
Mounting bracket, reinforcement	1	– 4G	8618
Mounting bracket and angle support	1	– 4G	9398

Page 21. Delete the following from the Range column of the Summary of Alteration panel:—
AS.4 – To B. 405107
AS.4 – B. 405108 on.

Section "Stores Data"

Page 23. Amend reference to 14A 2861 for Brackets, front seat pivot tube, to read 14A 2581.

INTERCHANGEABLE PARTS

The following parts have been superseded by new ones of modified design or material. These parts are interchangeable with their old counterparts and will be supplied for replacements when stocks of the old ones are exhausted.

SUMMARY OF ALTERATION

Description	Old Part	New Part	Type and Parts List Publication Number
Felt, handbrake cover plate	14A 803		A 30 Pubs. 883B Floor Fittings, p. 1 883B/1, p. 17 883B/3, p. 12 883B/4, p. 16
Sealing washer handbrake cover plate .		14A 3591	
Remarks: Rubber seal now fitted, instead of a felt seal.			

Description	Old Part	New Part	Type and Parts List Publication Number
Cork rings, large	2A 4063	2A 4178	A 30 Pub. 883B/2, p. 21
Cork rings, small	2A 4165	2A 4177	
Cork rings	1A 4764	1G 4505	A 40 Pub. 1099 Front Suspension, p. 3 A 40/A 50 Pub. 1099A Front Suspension, p. 1 A 70 Pubs. 780A, p. 36 853, p. 33 Austin-Healey 100 Pub. 1050 Front Suspension, p. 1
Remarks: Improved material specification			

Continued

FOR YOUR RECORDS	PARTS LISTS
	STOCK CARDS
	PARTS ORDERED
	ALTERATIONS NOTED

AMENDMENTS TO LITERATURE

A 30 PARTS LIST, PUBLICATION 883B/2.

Page 25. Add after part number 2A 504 the following:—

Joint washer for filler cap	–	1	– 7H 1827

A 40 PARTS LIST, PUBLICATION 1099.
Section "Doors".

Page 21. Amend part number 4B 7875, for Fixing screws to read 4B 6844.
Amend part number 4B 7967, for Rubber washers for fixing screws to read 4B 7875.
Amend part number 4B 7876, for Spring washers to read 4B 7967.

Section "Glass".

Page 1. Amend part number 4G 5693, for Front door glasses (laminated sheet) to read 4G 5689.
Amend:—

Rear door glasses	–	2	– 4G 5693 to read
Rear door glasses (toughened sheet)	–	2	– 4G 5693

Add the following:—

Rear door glasses (laminated sheet)	–	2	– 4G 5694

Page 10. Amend part number 4G 1639, for Draught excluders, front and rear doorways to read 14G 1639.

A 40/A 50 PARTS LIST, PUBLICATION 1099A.
Section "A 40 Engine".

Page 8. Amend part number 2K 6349, for Plug to read 2K 6343.
Amend the following part numbers to read:—

To E.2G 108 Valve rocker shaft with plugs	–	1	– 1G 2297
To E. 1H 223 Plug (brass)	–	1	– 2K 6343

Add:—

E.2G 109 on Valve rocker shaft with plugs	–	1	– 11G 62
E.1H 224 on Plug (Pressed steel)	1		– 6K 878

Page 16. Amend part number 52K 1566, for Bolt to bracket to read HBZ 0509.

Section "A 50 Engine".

Page 9. Amend the following part numbers to read:—

To E.2G 108 Valve rocker shaft with plugs	–	1	– 1G 2297
To E.1H 223 Plug (brass)	–	1	– 2K 6343

Add:—

E.2G 109 on Valve rocker shaft with plugs	–	1	– 11G 62
E.1H 224 on Plug (Pressed steel)	1		– 6K 878

Page 17. Amend part number 52K 1566, for Bolt to bracket to read HBZ 0509.

Continued

AMENDMENTS TO LITERATURE—*continued*

A 40/A 50 PARTS LIST, PUBLICATION 1099A.

Section "Body Shell".	Page 2.	Amend part number PAN 0408, for Pan head screws to body to read PMN 0408.
	Page 3.	Amend part number PNN 0408, for Pan head screws to body to read PMN 0408.
THE AUSTIN SERVICE JOURNAL, CARS—VOLUME 22. Section "Engine".	Page 46.	Add the following data under the heading "Commencing Engine Numbers" A 125 / A 135 – – – – – – 12100
THE AUSTIN SERVICE JOURNAL, CARS—VOLUME 24. Section "Body".	Page 28.	The reference to Volume 24, Section "Body", page 35, should read Volume 23, Section "Body", page 35.
Section "Engine".	Page 41.	Amend part number 1D 1894, for Valve rockers with bush and adjusting screw to read 1D 1794.
Section "Stores Data".	Page 16.	Amend reference to 2A 184 for Petrol Filler cap to read 2A 509. Amend reference to publication number 883B Petrol Tank, p. 1 to read 883B/2, p. 25.

CAR ENGINE AND CHASSIS SERIAL NUMBERS

The system of giving cars a separate engine and chassis serial number has now been discontinued in favour of a joint car/engine serial number. The body will continue to have a separate serial number. The following list shows the last chassis number and the first car/engine number for each range of vehicle. The abbreviation C.E. will be used in parts lists to indicate a car/engine number.

The car/engine serial number system has been in use from the outset of production in the case of the A 40/A 50 Cambridge. It should be noted that all cars in the A 70, Austin-Healey 100, 16-H.P. Taxi and Hire Car range will share the same serial number sequence. A 30, A 40/A 50, A 125 and A 135, have each had a separate range allocated to them.

Model	Finishing Chassis Number	Commencing Car/Engine Number
A 30	72037	73000
A 70	161964	219000
Austin-Healey 100	161885	219000
16 H.P. Taxi and Hire Car	162037	219000
A 125 and A 135	10697	121000

INTERCHANGEABLE PARTS

The following parts have been superseded by new ones of modified design or material. These parts are interchangeable with their old counterparts and will be supplied for replacements when stocks of the old ones are exhausted.

Description	Old Part	New Part	Type and Parts List Publication Number
Layshaft	1B 3329	1B 3702	A70, Pubs. 780A, p. 31. 853, p. 28. A90, Pub. 787, p. 34. Austin-Healey 100 Pub. 1050, Gearbox, p. 3.
Remarks: Modified drilling to improve oil feed to front layshaft bearing.			

Description	Old Part	New Part	Type and Parts List Publication Number
Valve spring cup	1B 2875	11B 263	A70 Pubs. 780A, p. 5, 853, p. 5, 16-H.P. Taxi Pub. 558A, p. 5. 16-H.P. Hire-Car Pub. 728, p. 5. A125 Pubs. 430A, p. 5. 779, p. 5. A135 Pub. 624, p. 5.
Valve spring cup	1B 2811	11B 262	Austin-Healey 100 Pub. 1050, Engine, p. 9.
Remarks : Thicker flange to increase strength.			

Continued

FOR YOUR RECORDS	PARTS LISTS
	STOCK CARDS
	PARTS ORDERED
	ALTERATIONS NOTED

INTERCHANGEABLE PARTS—*continued*

Description	Old Part	New Part	Type and Parts List Publication Number
Crankshaft gear	1B 2373	11B 231	A70 Pubs. 780A, p. 7 853, p. 6. 16-H.P. Hire-Car Pub. 728, p. 7. Austin-Healey 100 Pub. 1050, Engine, p. 4.
Remarks: Improved material.			

Description	Old Part	New Part	Type and Parts List Publication Number
Tank unit for gauge	1G 2690	11G 2063	A40/50 Pub. 1099A, Petrol Tank, p.1.
Remarks: Modified design. Commencing Chassis Engine Number – 8425			

Description	Old Part	New Part	Type and Parts List Publication Number
Oil reservoir	1B 1117	11B 340	A70 Pubs. 780A, p. 9, 853, p. 9. A90 Pub. 787, p. 10, Austin-Healey 100 Pub. 1050, Engine, p. 8. 16-H.P. Taxi Pub. 558A, p. 10. 16-H.P. Hire-Car, Pub.728, p. 9.
Remarks: Standardization of oil reservoir.			

AMENDMENTS TO LITERATURE

A 30 PARTS LIST, PUBLICATION 883B, Section "Gearbox".

Page 13. Add the word "fibre" after part number 6K 593.
Add after item 8.

Joint washer for bush, copper	1	–	11G 3084

Section "Rear Axle".

Page 5. Amend part number P.439, for Brake shoe return spring set, to read P.493.

Section "Steering".

Page 4. Amend part number 7H 6409, for Filler plug, to read 2K 8209.

A30 PARTS LIST, PUBLICATION 883B/1.

Page 15. Amend part number 14A 1384, for Telescopic boot lid stay assembly, to read 14A 2634.

A30 PARTS LIST, PUBLICATION 883B/3.

Page 9. Amend part number 14A 1384, for Telescopic boot lid stay assembly, to read 14A 2634.

A40 PARTS LIST, PUBLICATION 1099, Section "Bonnet".

Page 2. Amend part number 4G 6932, for Plates "Austin of England" to read 4B 6932.

Section "Steering".

Page 3. Amend part number 7H 6026, for Spring washers, to read LWN 105.

A40/A50 PARTS LIST PUBLICATION 1099A, Section "A40 Engine".

Page 1. Add after item 11 the following:—

Plug for redundant dipper rod boss	1	–	2K 4608

Page 3. Amend part number 1G 2950, for Camshaft, to read 1G 2591.
Amend part number 52K 1675, Nuts for bolts to read 52K 1673.

Page 13. Add after item 22:—

Water pump repair kit	1	–	8G 2130

Page 14. Amend part number 1G 2616, for Petrol pipe, pump to carburetter with banjo union, to read 1G 2973.
Amend the following:—

Air cleaner and intake silencer oil bath type		1	–	3H 3074
Stay for air cleaner front		1	–	1G 2514
Stay for air cleaner, rear		1	–	1G 2515
Setscrews	Export	4	–	HZS 0405
Washers	Market	4	–	PWZ 104
Spring washers		4	–	LWN 204
Rubber connection, air cleaner to valve rocker cover		1	–	1G 1641

To read:—

Air cleaner and intake silencer oil bath type	Export Market	1	–	1G 2988

Continued

FOR YOUR RECORDS	PARTS LISTS
	STOCK CARDS
	PARTS ORDERED
	ALTERATIONS NOTED

AMENDMENTS TO LITERATURE—*continued*

A40/50 PARTS LIST, PUBLICATION 1099A, Section "A40 Engine".

Page 14—continued.

Rubber insulator, air cleaner to carburetter		1	–	1G 2989
Clip, insulator to air cleaner		1	–	7H 1820
Bolt for air cleaner cover		1	–	7H 1817
Filter element		1	–	7H 1819
Cork seating for element		1	–	7H 1678
Brace for air cleaner upper	Export Market	1	–	1G 2724
Brace for air cleaner, lower		1	–	11G 61
Setscrew for brace		1	–	HZS 0505
Spring washer		1	–	LWN 205
Rubber connection, air cleaner to valve rocker cover		1	–	1G 2725

Amend items 34—37 to read:—

Clip, air cleaner to carburetter		1	–	1H 146
Bolt for clip	Home	1	–	HBZ 0420
Nut for bolt	Market	1	–	FNZ 104
Washer		1	–	PWZ 104

Section "A50 Engine"

Page 1. Amend part number 11G 148, for Plug for oil filter boss to read 11G 14.

Add after item 12 the following:—

Plug for redundant dipper rod boss	– –	1	–	2K 4608

Amend part number 2K 460, for Plug for rear main bearing cap to read 2K 4608.

Page 3. Amend part number 11G 49, for Engine front support bracket, right hand to read 11G 48.

Page 9. Amend part number 1G 2294 for Adjusting screws to read 1G 2296.

Page 14. Add after item 22:—

Water pump repair kit		1	–	8G 2130

Page 15. Amend part number 1G 2616, for Petrol pipe, pump to carburetter with banjo union, to read 1G 2973.

Amend the following:—

Air cleaner and intake silencer (oil bath type)		1	–	3H 3074
Stay for air cleaner front		1	–	1G 2514
Stay for air cleaner, rear		1	–	1G 2515
Setscrews	Export	4	–	HZS 0405
Washers	Market	4	–	PWZ 104
Spring washers		4	–	LWN 204
Rubber connection air cleaner to valve rocker cover		1	–	1G 1641

Continued

AMENDMENTS TO LITERATURE—*continued*

A40/A50 PARTS LIST, PUBLICATION 1099A, Section "A50 Engine".

To read:—

Page 15. Air cleaner and intake silencer oil bath type		1	–	1G 2988
Rubber insulator air cleaner to carburetter		1	–	1G 2989
Clip, insulator to air cleaner		1	–	7H 1820
Bolt for air cleaner cover		1	–	7H 1817
Filter element		1	–	7H 1819
Cork seating for element	Export	1	–	7H 1678
Brace for air cleaner, upper	Market	1	–	1G 2724
Brace for air cleaner, lower		1	–	11G 61
Setscrew for brace		1	–	HZS 0505
Spring washer		1	–	LWN 205
Rubber connection, air cleaner to valve rocker cover		1	–	1G 2725

Amend items 34 – 37 to read:—

Clip, air cleaner to carburetter		1	–	1H 146
Bolt for clip	Home	1	–	HBZ 420
Nut for bolt	Market	1	–	FNZ 104
Washer		1	–	PWZ 104

Section "Gearbox".

Page 3. Amend:—

Joint washer for bush		1	–	6K 593

To read:—

Joint washer for bush, fibre		1	–	6K 593

Add after item 7:—

Joint washer for bush, copper		1	–	11G 3084

Amend part number 1G 9533, for Mounting cross member, to read 1G 9653.

Section "Electrical".

Page 1. Add after item 25 the following:—

Red lens for ignition warning light on speedometer		1	–	7H 1828
Green lens for oil pressure warning light on speedometer		1	–	7H 1829

Add after item 28 the following:—

Inner speedometer flex		1	–	7H 1812

Add after item 36 the following:—

Inner speedometer flex		1	–	7H 1813

Add after item 34 the following:—

Bulb		1	–	7H 1822

Continued

AMENDMENTS TO LITERATURE—*continued*

A40/A50 PARTS LIST, PUBLICATION 1099A, Section "Electrical".

Page 3. Amend items 1 to 7

Body cable harness		1	–	11G 2001
Cable for right hand trafficator	Fitt-	1	–	6K743
Cable for left hand trafficator	ings for	1	–	6K 745
Rubber sleeves at trafficator	Flasher Unit	12	–	4G 4871
Earthing leads.		2	–	3H 2894
Body cable harness	Fitt-	1	–	11G 2004
Cable flasher unit to fuse box (A4)	ings for Trafficators	1	–	11G 2012

To read:—

Body cable harness		1	–	11G 2001
Cable for right hand trafficator		1	–	6K 743
Cable for left hand trafficator	Fittings for Trafficators	1	–	6K 745
Rubber sleeves at traffi-cators		2	–	4G 4871
Earthing leads		2	–	3H 2894
Body cable harness	Fittings for Flasher	1	–	11G 2004
Cable, flasher unit to fuse block (A4)	Unit	1	–	11G 2012

Page 4. Add after item 1 the following:—

Light unit	2	–	7H 5483

Add after item 6 the following:—

Light unit	2	–	7H 5485

Add after item 11 the following:—

Light unit	2	–	7H 5484

Page 4. Add after item 16 the following:—

Light unit	2	–	7H 5523

Add after item 20 the following:—

Headlamp rims	2	–	17H 5292

Add after item 25 the following:—

Lens and rims assembly	2	–	17H 5294

Add after item 30 the following:—

Lens and rim assembly	2	–	17H 5295

Add after item 36 the following:—

Lens	2	–	17H 5293

Add after item 41 the following:—

Glass	1	–	17H 5301

Add after item 42 the following:—

Rubber sealing	1	–	17H 5302

Page 5. Delete part number 14G 3718, for Wiper motor and cable.

Continued

AMENDMENTS TO LITERATURE—*continued*

A40/A50 PARTS LIST PUBLICATION 1099A, Section "Rear – Axle".

Page 1. Amend part number †ATB 7145, in footnote, to read ATB 7143.

Page 2. Amend part number 2K 7213, for Taper roller bearing for pinion, front to read 2A 7213.

Page 3. Amend part number P.767, for * Brake shoes with lining, rear brakes, to read P.767B.

Section "Steering".

Page 1. Add after 1G 2894 the following:—

Knob for indicator	1	–	17H 5300

Delete part number 1G 6306, for Horn button and stator tube, R.H. Steering.

Amend description of part number 1G 6307 to read Horn button and stator tube assembly.

Add after item 14 the following:—

Top cover assembly with horn button	1	–	17H 5296
Stator tube cable	1	–	17H 5297

Page 3. Amend the following:—

Idler body with bushes and oil seal, R.H. Steering	1	–	7H 6483
Idler body with bushes and oil seal, L.H. Steering	1	–	7H 6484
Oil seal	1	–	7H 6430
Cover for idler body	1	–	7H 6486
Joint washers	As Req.	–	7H 6487
Setscrews, cover to body	3	–	7H 6438
Spring washers	3	–	7H 6026
Oiling plug	1	–	7H 6409
Idler shaft	1	–	7H 6485

To read:—

Idler body with bushes and oil seal, R.H. Steering	1	–	1G 6320
Idler body with bushes and oil seal, L.H. Steering	1	–	1G 6321
Oil seal	1	–	3H 3132
Cover for idler body	1	–	1B 6137
Joint washers –	As Req.	–	1B 6138
Setscrews, cover to body	3	–	HZS 0505
Spring washers	3	–	LWZ 105
Oiling plug	1	–	2K 8209
Idler shaft	1	–	1G 6258

Add after item 12 the following:—

Idler repair kit	1	–	8G 4115

Continued

AMENDMENTS TO LITERATURE—*continued*

A40/A50 PARTS LIST, PUBLICATION 1099A, Section "Front Suspension".

Page 1. Amend part number 51K 334, for Nuts for pins, to read FNN 407.
Amend part number 52K 1695 for Nuts for spindles to read FNZ 810.
Amend part number CPS 0308, for Split pins, to read CPS 0412.
Amend part number 1G 4440, for Front suspension cross member, to read 1G 4493.
Amend part number HBN 0615, for Bolts for clamped arms, to read HBN 0616.
Amend part number 3H 2192, for Grease nipples, to read 3H 3028.

Page 2. Add after item 11 the following:—

Swivel axle pin and bush set	1	–	8G 4116

Page 3. Amend part number P.4023, for Wheel cylinder repair kit, to read P.476.
Amend part number P.4020, for Brake shoes with linings, front brakes, to read P.4020B.

Section "Rear Suspension".

Page 2. Delete part numbers 1G 9339 and 1G 9342.
Insert after item 5:—

Link for shock absorbers	2	–	1G 9339

Section "Controls".

Page 1. Delete part numbers 1A 1829 and 1F 1293.
Add after item 1 the following:—

Collars for shaft	2	–	1A 1829

Delete part numbers 1G 2697 and 1G 2701.
Add after item 4 the following:—

Accelerator pedal spring	1	–	1G 889

Page 2. Amend part number HZS 0510, for Setscrews, master cylinder to pedal lever bracket, to read HZS 0511.
Add after item 20 the following:—

Clutch master cylinder repair kit	1	–	8G 2127

Add after item 40 the following:—

Clutch operating cylinder repair kit	1	–	8G 2125

Page 3. Add after item 12 the following:—

Master cylinder repair kit	1	–	P 762

Amend part number 52K 2038, for Setscrews to pedal lever bracket, to read HZS 0511.
Add after item 17 the following:—

Packing piece, master cylinder to bracket	1	–	1G 9442
Stud, master cylinder to bracket	1	–	52K 489
Nut for stud	1	–	FNZ 105
Spring washer	1	–	LWZ 105

Continued

AMENDMENTS TO LITERATURE—*continued*

A40/A50 PARTS LIST, PUBLICATION 1099A, Section "Controls".

Page 5. Amend part number 2H 2641, for Brake "pull-off" springs for cross rods, to read 2H 1641.

Page 6. Delete part number CPS 0410 for Split pin, spring to control rod.
Add after item 22:—

Anchor plate (on gearbox), for spring	1	–	11G 3122

Amend part number 5C 2546, for Rivets, to read RRS 0207.

Page 7. Add after item 34 the following:—

Change speed cross shaft bracket, outer with ball socket	1	–	4G 1298
Ball socket	1	–	1B 3403
Screws, bracket to body	2	–	HZS 0505
Special washers	2	–	LWN 205

Section "Petrol Tank".

Page 1. Amend part number 2K 6428, for Screws, unit to tank to read 53K 165.
Delete part numbers 2K 5555 and 2K 8932.
Add after item 17:—

Clips for pipe	6	–	ALT 123

THE AUSTIN-HEALEY 100, PUBLICATION 1050, Section "Gearbox and Overdrive"

Page 7. Amend part number 52K 3028, for Bolts rubber mountings to frame, to read HZS 0507.

Section "Steering".

Page 3. Amend part number 3H 3127, for Oil seal, to read 3H 3132.

A70 PARTS LIST, PUBLICATION 780A.

Page 44. Amend part number 3H 3127, for Oil seal, to read 3H 3132.

A70 PARTS LIST, PUBLICATION 853.

Page 40. Amend part number 3H 3127, for Oil seal, to read 3H 3132.

Continued

AMENDMENTS TO LITERATURE—*continued*

THE AUSTIN SERVICE JOURNAL
Cars—Volume 24,

Section "Axle – Front".	Page 4. All reference to GT 8G should read GT 8K.
Section "Steering".	Page 12. Amend the word "three" in line 16 to read "these."
Section "Stores Data".	Page 27. Reference to "Engine" page 16, item 17, Joint washer to crankcase should read 1B 1233 and Joint washer to crankcase and oil filter should read 1B 1233.
	Page 28. Reference to 1G 1629 should read 1G 9629. Reference to 1G 1631 should read 1G 9631.
Section "Tools".	Page 22. All reference to GT 8G should read GT 8K.

REAR ROAD SPRINGS

Austin-Healey 100

A new rear road spring has been introduced to ensure that there is adequate ground clearance when the car has finally settled down on its springs. The new rear spring has ½" (12.7 mm.) positive camber A, whereas the old one had ½" (6.35 mm.) negative camber B, normally loaded, see illustrations for comparison.

INTERCHANGEABILITY

The new springs can be used to replace the old ones, but only in pairs. Main leaves are not interchangeable.

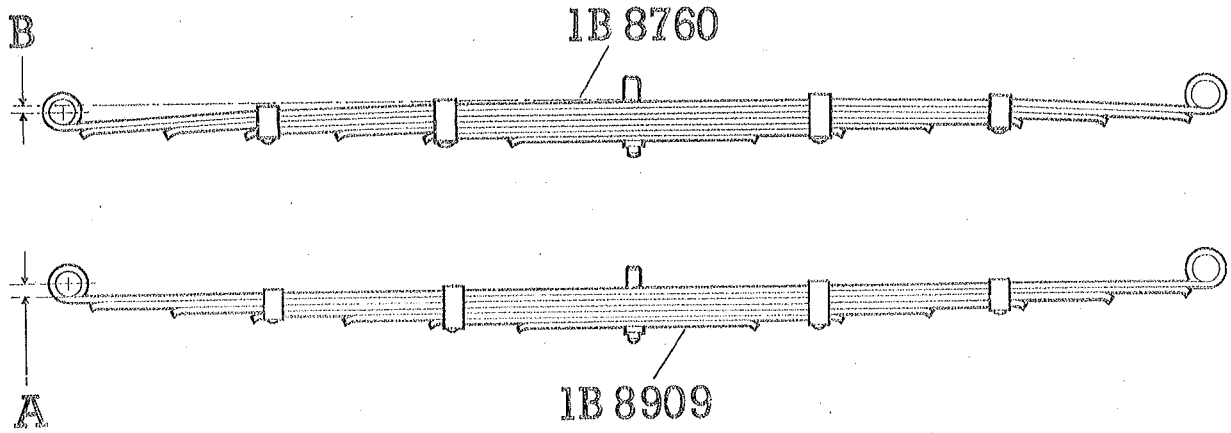

STR 1280

SUMMARY OF ALTERATION

Description	Number Off	Old Part	New Part	Type
Rear Springs with bushes . . .	2	1B 8760	1B 8909	Austin-Healey 100
Main Leaves	2	1B 8761	1B 8910	

COMMENCING CHASSIS NUMBERS:—

R.H. Steering — — 148987
L.H. Steering — — 148921

FOR YOUR RECORDS	PARTS LISTS
	STOCK CARDS
	PARTS ORDERED
	ALTERATIONS NOTED

FRONT SUSPENSION LINK BEARINGS

A 40

Further to the articles appearing in this Journal, Volume 23, section "Suspension", pages 3 and 6, flangeless type bearings for the trunnion and lower links of the front suspension have now been approved as standard fitment on A 40 vehicles.

INTERCHANGEABILITY

The flangeless type bearings can be used to replace the old type on A 40 vehicles.

NOTE.—1A 4761 and 1A 4781 are still used on A 70 vehicles.

SUMMARY OF ALTERATION

Description	Number Off	Old Part	New Part	Parts List Publication Number
Bearings for trunnion links . . .	4	1A 4761	ALT-131	Pubs. 579A/1, p. 16
Bearings for lower links	8	1A 4781	ALT-132	884, p. 32

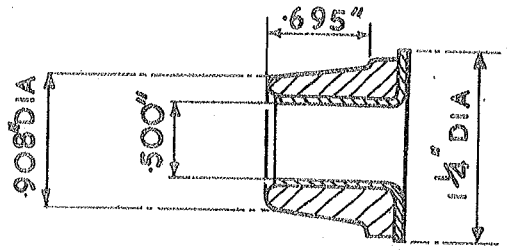

1A4761

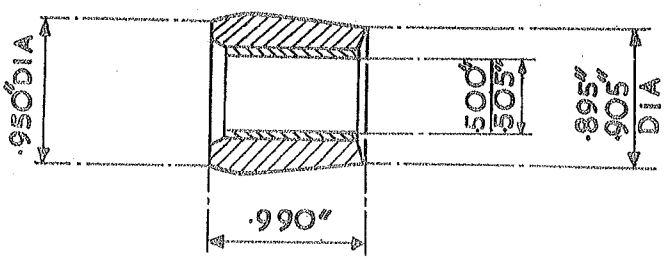

ALT-131

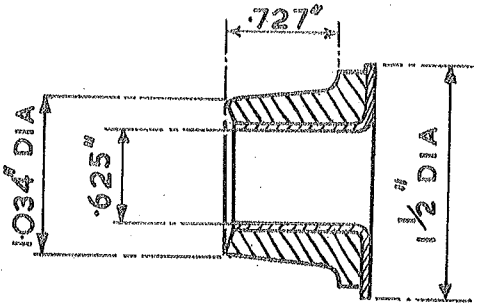

1A4781

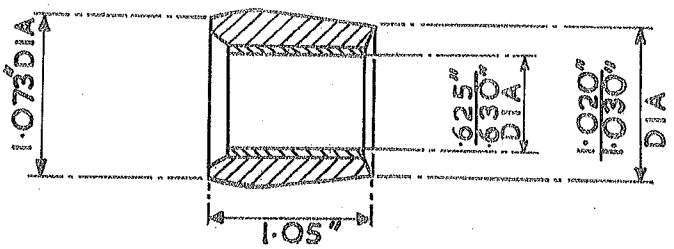

ALT-132

STR 879A

FOR YOUR RECORDS	PARTS LISTS
	STOCK CARDS
	PARTS ORDERED
	ALTERATIONS NOTED

Continued

FRONT SUSPENSION LINK BEARINGS—*continued*

COMMENCING CHASSIS NUMBERS:—

A 40 Saloon, R.H. Steering – –	808638
L.H. Steering – –	808660
Van, R.H. Steering – – –	808639
L.H. Steering – – –	809037
Pick-Up, R.H. Steering – –	808646
L.H. Steering – –	808690
Countryman, R.H. Steering –	808784
L.H. Steering –	814045
Coupe, R.H. Steering – –	808653
L.H. Steering – –	809136

REAR AXLE BUMPER BRACKETS

Austin-Healey 100

The rear axle bumper brackets have been modified to increase the clearance between the tyre and the bracket. The new bracket is similar to the old one, but the upper fixing flanges A have been repositioned to permit the bracket to fit farther under the wheelarch. The fixing holes in the wheelarch for the lower flanges B have been repositioned to suit the new brackets (see illustrations for comparison).

INTERCHANGEABILITY

The new brackets may be used in pairs for replacements of the old ones, provided that new $\frac{1}{4}$" (6.35 mm.) holes are drilled in the wheelarch for the lower fixing bolts.

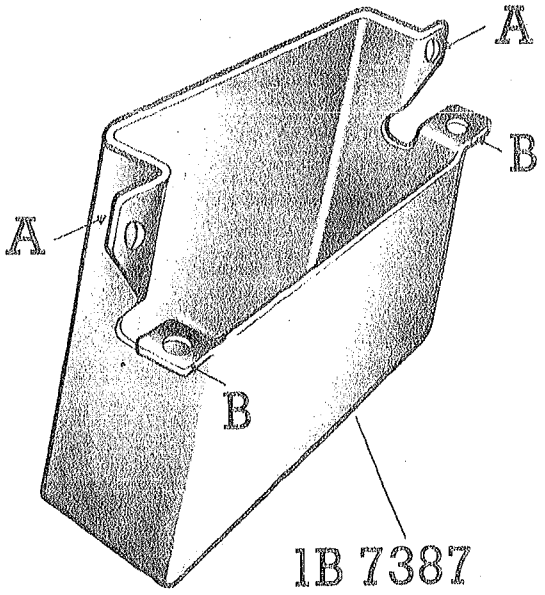

Old Bumper Bracket *STR 1284*

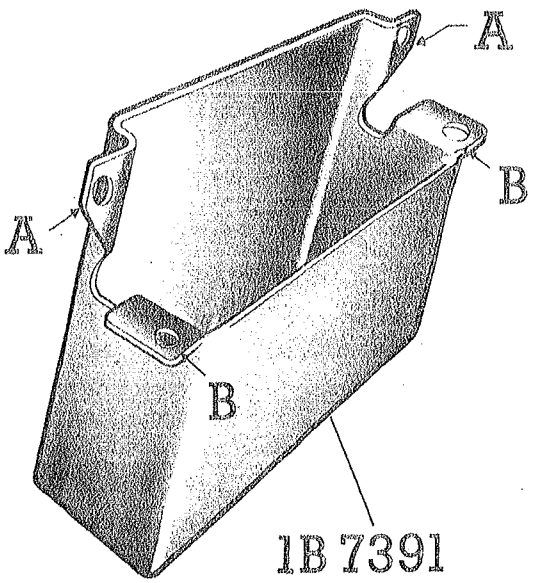

New Bumper Bracket *STR 1285*

SUMMARY OF ALTERATION

Description	Number Off	Old Part	New Part	Type
Brackets for rear axle bumpers	2	1B 7387	1B 7391	Austin-Healey 100

COMMENCING CHASSIS NUMBERS:—

R.H. Steering — — 146479
L.H. Steering — — 146476

FOR YOUR RECORDS	PARTS LISTS
	STOCK CARDS
	PARTS ORDERED
	ALTERATIONS NOTED

FRONT SHOCK ABSORBER MOUNTINGS

A 30

Attention is drawn to the necessity of checking and tightening up, if necessary, the front shock absorber attachment setscrews, not only on Pre-delivery Check, but also at the After Sales Service.

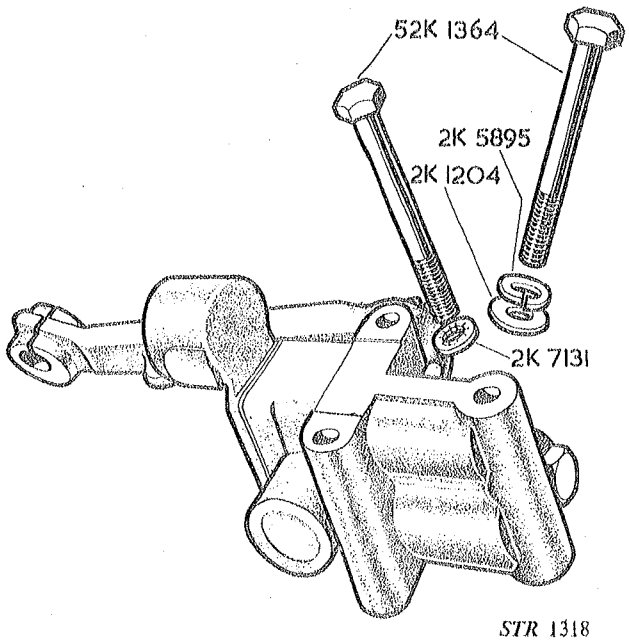

STR 1318

Shakeproof washers (part number 2K 7131) fitted under the heads of the shock absorber setscrews have recently been dispensed with in favour of heavy duty spring washers (part number 2K 5895), and as an additional safeguard, plain steel washers (part number 2K 1204) have now been included. Accordingly the setscrews have been increased in length from $3\frac{7}{8}$" (96.425 mm.) to 4" (101.600 mm.) to accommodate the extra thickness of the washers; they retain the same part number 52K 1364.

At routine overhaul periods, or when shock absorbers are detached for any reason, it is recommended that the longer setscrews, together with heavy duty spring washer and plain steel washer, are used in lieu of the original parts. Under no circumstances should the shock absorber setscrews be replaced by any other than the screws supplied by this Company, which are made from 55 tons (87 kg.) tensile steel.

REAR SHOCK ABSORBER LINK PIN

A 30, A 40

The ball pin in the knuckle end of the rear shock absorber links now has two flats incorporated in the design. The flats enable the ball pin to be held with the aid of a spanner whilst the nut is fully tightened. This method ensures that the link is correctly attached to the rear axle case and thus prevents premature wear of the ball pin and its rubber cushion.

INTERCHANGEABILITY

As interchangeability is not affected, part numbers 3H 2341, 3H 2342, 3H 2860 and 3H 2862 of the shock absorbers remain unchanged.

COMMENCING CHASSIS NUMBERS:—

A 30 2-Door,	R.H. Steering	31878
	L.H. Steering	32003
A 40 Saloon,	R.H. Steering	783392
	L.H. Steering	783396
Coupe,	R.H. Steering	783421
	L.H. Steering	784095
Van,	R.H. Steering	783398
	L.H. Steering	783560
Countryman,	R.H. Steering	783404
	L.H. Steering	783861
Pick-Up,	R.H. Steering	783394
	L.H. Steering	785318

FOR YOUR RECORDS	
	PARTS LISTS
	STOCK CARDS
	PARTS ORDERED
	ALTERATIONS NOTED

BRAKE BACKPLATE LOCKWASHERS

A 40, A 70, Austin-Healey 100

A new lockwasher has been introduced for the upper setscrews securing the brake backplates to the swivel axles. The new lockwasher has a wider cross section which prevents it buckling when the setscrews are being tightened.

INTERCHANGEABILITY

The new lockwashers should be used to replace the old ones in this application.

SUMMARY OF ALTERATION

Description	Number Off	Old Part	New Part	Type and Parts List Publication Number
Lockwashers for setscrews, swivel axles to backplates	2	1G 4282	1G 4471	A 40 Pubs. 579A/1, p. 17 884, p. 34 A 70 Pubs. 780A, p. 38 853, p. 35 Austin-Healey 100

COMMENCING CHASSIS NUMBERS:—

A 40 Saloon, R.H. Steering – – – –	833956
L.H. Steering – – – –	833971
Van, R.H. Steering – – – –	833973
Countryman, R.H. Steering – – –	833987
L.H. Steering – – –	834467
Pick-Up, R.H. Steering – – –	833992
L.H. Steering – – –	835331
Coupe, R.H. Steering – – – –	833965
L.H. Steering – – – –	834034
A 70 Saloon, R.H. Steering – – – –	152146
L.H. Steering – – – –	152274
Pick-Up, R.H. Steering – – –	152288
L.H. Steering – – –	152263
Austin-Healey 100, R.H. Steering – –	151690
L.H. Steering – –	151691

FOR YOUR RECORDS	PARTS LISTS
	STOCK CARDS
	PARTS ORDERED
	ALTERATIONS NOTED

Published March 29, 1954

REAR ROAD SPRINGS

Austin-Healey 100

Stronger and stiffer rear road springs, which were formerly supplied only to special order for racing purposes, are now being fitted as standard initial equipment to further improve the performance of the Austin-Healey car. The new springs are of the reverse camber type, similar to the ones which were fitted prior to the recent introduction of positive camber springs, refer to this Journal, Volume 24, Cars ,"Suspension", page 1. The new springs, part number 1B 8929, which have eight leaves instead of seven, are readily distinguishable from the old ones, part number 1B 8909. The top spring leaf is increased in thickness from $\frac{5}{32}$" (3.969 mm.) to $\frac{3}{16}$" (4.7625 mm.) and there is a special stiffening and safety clip A fitted around the eye at both ends of the spring—see Fig. 1.

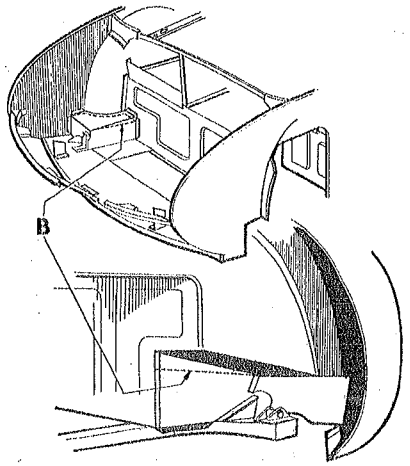

Fig. 2 *STR 1378*

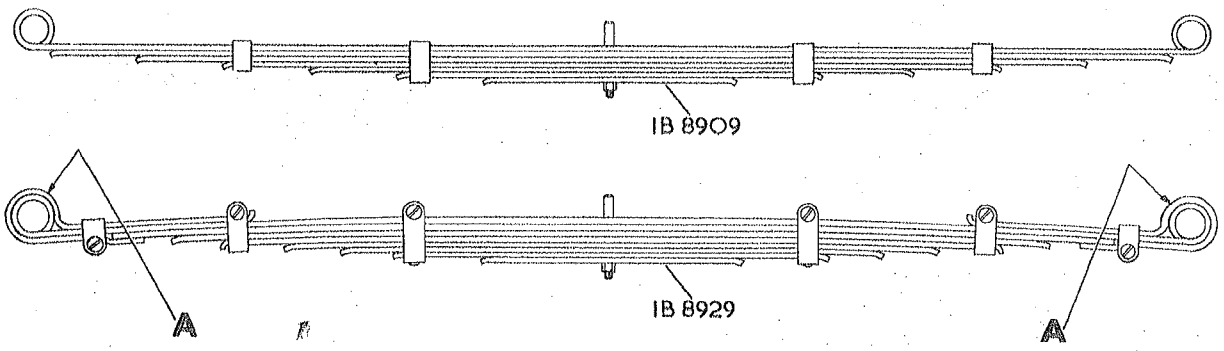

Fig. 1 *STR 1377*

Continued

FOR YOUR RECORDS	PARTS LISTS
	STOCK CARDS
	PARTS ORDERED
	ALTERATIONS NOTED

REAR ROAD SPRINGS—*continued*

To accommodate the extra thickness of the spring, the toe bolt has been lengthened from $1\frac{9}{16}$" (39.687 mm.) to $1\frac{3}{4}$" (44.449 mm.) and the spring clips from $2\frac{3}{4}$" (69.849 mm.) to $2\frac{7}{8}$" (73.024 mm.).

The extra height of the new spring has necessitated modifications to the body to give sufficient clearance between the top of spring and the body when the spring is in the full bump position. The top of the rear spring shackle box has been raised by $1\frac{1}{4}$" (31.749 mm.) at its front end, as shown by the dotted line B which marks the position of the original top—see Fig. 2. At the front end of the rear spring the floor panel has been raised at C by $\frac{3}{4}$" (19.05 mm.) immediately above the shackle—see Fig. 3.

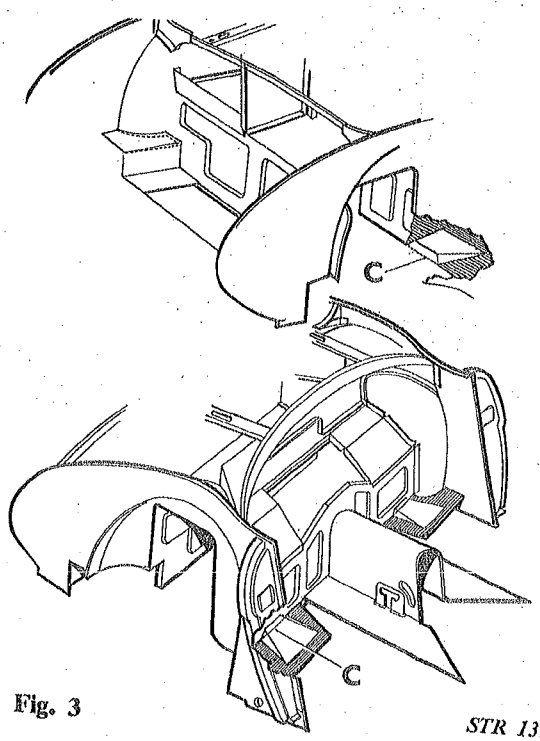

Fig. 3 STR 1379

INTERCHANGEABILITY

The new springs cannot be fitted unless the body is modified to give sufficient clearance at full bump. Further details for modification to the body will be published in due course.

SUMMARY OF ALTERATION

Type	Range	Description	Number per Vehicle	Austin Part Number	Parts List Publication Number
BN.1	R.H.S. C.148987–154646 L.H.S. C.148921–154648 except*	Rear springs with bushes Main leaves with bushes	2 2	1B 8909 1B 8910	Pub. 1050, Rear Suspension, p. 1.
	R.H.S. C.154647 on, and* L.H.S. C.154649 on, and*	Rear springs with bushes Main leaves with bushes	2 2	1B 8929 1B 8930	

Continued

REAR ROAD SPRINGS—*continued*

SUMMARY OF ALTERATION—*continued*

Type	Range	Description	Number per Vehicle	Austin Part Number	Parts List Publication Number
BN.1	R.H.S. To C.154646 L.H.S. To C.154648 except*	Rear spring clips . . .	4	1G 5103	Pub. 1050, Rear Suspension, p. 1
		Toe bolts	2	1B 8759	
	R.H.S. C.154647 on, and* L.H.S. C.154649 on, and*	Rear spring clips . . .	4	1G 5271	
		Toe bolts	2	1B 8931	

*152233–152242, 152244, 152246, 152248–152252, 152254, 152255, 152257–152422, 152424–152475, 152477–152484, 152487, 152490–152505, 152507–152511, 152514–152540, 152542–152553, 152556–152559, 152562–152578, 152580–152736, 152739–152744, 152746–152768, 152770–152777, 152779–152935, 152937–152942, 152944, 152945, 152947–152949, 152951, 152953–152973, 152975, 152976, 152978–153320, 153799–153898, 154100–154645.

FRONT SHOCK ABSORBERS

Austin-Healey 100

New front shock absorbers are being fitted to further improve the riding qualities of the car and to reduce shock absorber 'fade'. The new shock absorbers are identical with the old ones except for the valves which have a modified torque leak setting.

INTERCHANGEABILITY

The new shock absorbers are interchangeable, in pairs, with the old ones and will be supplied for replacements.

SUMMARY OF ALTERATION

Type	Range	Plate	Description	Number per Vehicle	Austin Part Number	Parts List Publication Number
BN.1	R.H.S. C.138975–153856 L.H.S. C.138031–153854	F.1	Front shock absorbers, with arms (use 1B 8935 in pairs) – – – –	2	3H 3045	Pub. 1050, Front Suspension, p. 1
	R.H.S. C.153857 on L.H.S. C.153855 on	F.1	Front shock absorbers with arms	2	1B 8935	

FOR YOUR RECORDS	PARTS LISTS
	STOCK CARDS
	PARTS ORDERED
	ALTERATIONS NOTED

CORK RINGS FOR FULCRUM PIN

A 30

A modified cork ring is now being fitted at the small end of the outer fulcrum pin for the front suspension lower link. The modified cork ring, part number 2A 4165, is of the same external diameter and thickness as the old one, but the internal diameter A has been reduced to $\frac{3}{4}$" (19.05 mm.). The old ring, part number 2A 4063, which was previously used at both ends of the fulcrum pin has an internal diameter B of $\frac{13}{16}$" (20.637 mm.), and continues to be used at the large end of the fulcrum pin—see illustration.

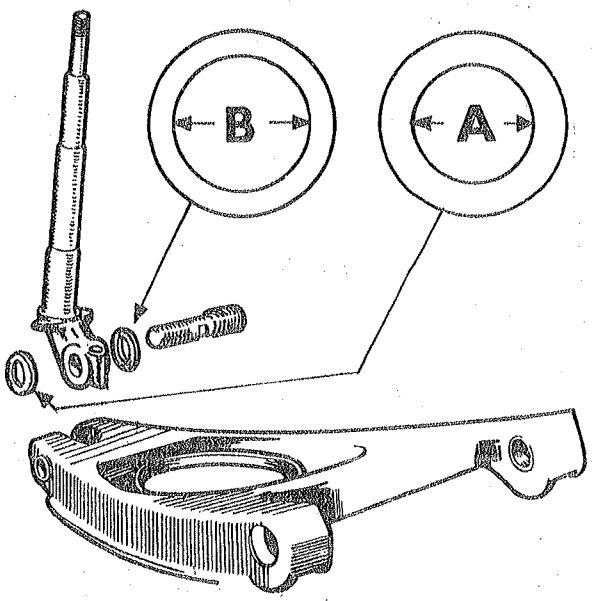

STR 1388

INTERCHANGEABILITY

When making replacements use the cork rings in pairs, one large and one small on each fulcrum pin.

SUMMARY OF ALTERATION

Type	Range	Plate	Description	Number per Vehicle	Austin Part Number	Parts List Publication Number
AS.3	R.H.S. to C.28470 L.H.S. to C.29852	F.30	Cork rings (use 2A 4063 with 2A 4165 in pairs) .	4	2A 4063	Pub. 883B, Front Suspension, p. 1.
AS.4	R.H.S. C.25631–34444 L.H.S. C.33906–34443					
A2S.4	R.H.S. C.25621–34452 L.H.S. C.30715–34449					
AS.4	R.H.S. C.34445 on L.H.S. C.34444 on	F.30	Cork rings ($\frac{13}{16}$" internal diameter)	2	2A 4063	
A2S.4	R.H.S. C.34454 on L.H.S. C.34450 on		Cork rings ($\frac{3}{4}$" internal diameter)	2	2A 4165	

FOR YOUR RECORDS	PARTS LISTS
	STOCK CARDS
	PARTS ORDERED
	ALTERATIONS NOTED

Published May 10, 1954

SETSCREWS, STABILIZER BAR TO SHOCK ABSORBERS

A 125, A 135

The setscrews securing the stabilizer bar to the rear shock absorber arms have now been dispensed with in favour of a nut and bolt fixing.

This has necessitated a modification to the shock absorber arm, which now has an additional raised surface on the outer face to provide a good seating for the nut.

INTERCHANGEABILITY

The new bolts and nuts can only be used with the shock absorbers having the modified arm. The part numbers of the shock absorbers remain unchanged.

SUMMARY OF ALTERATION

Description	Number Off	Old Part	New Part	Type and Parts List Publication Number
Setscrews to shock absorbers . .	2	2K 8880	—	A 125 Pubs. 430A, p. 30, 779, p. 34
Bolts, stabilizer bar to shock absorber arms	2	—	2K 7683	
Nuts for bolts	2	—	2K 3977	A 135 Pub. 624, p. 31

COMMENCING CHASSIS NUMBERS :—

A 125 : To follow at a later date.

A 135, R.H. Steering – – 10422

FOR YOUR RECORDS	PARTS LISTS
	STOCK CARDS
	PARTS ORDERED
	ALTERATIONS NOTED

FRONT AND REAR SHOCK ABSORBERS

A 30

New and improved shock absorbers have been introduced. The new shock absorbers, A and B, can be distinguished readily from the old ones, C and D, by the external appearance of the casing —see Fig. 1.

The working principle of the shock absorbers is not changed in any way, but the compression and rebound valves have been redesigned to form a new co-axial arrangement, the working of which is as follows:—

On the compression (bump) stroke, oil from the compression cylinder C is forced through the drilling A to the annular groove B from which it passes along the drillings D to overcome the compression spring E, thus allowing the oil to pass the compression valve F into the valve chamber G. From the valve chamber the oil is drawn along the drillings H, annular groove J and drilling K to the rebound cylinder R—see the dotted line, Fig. 2.

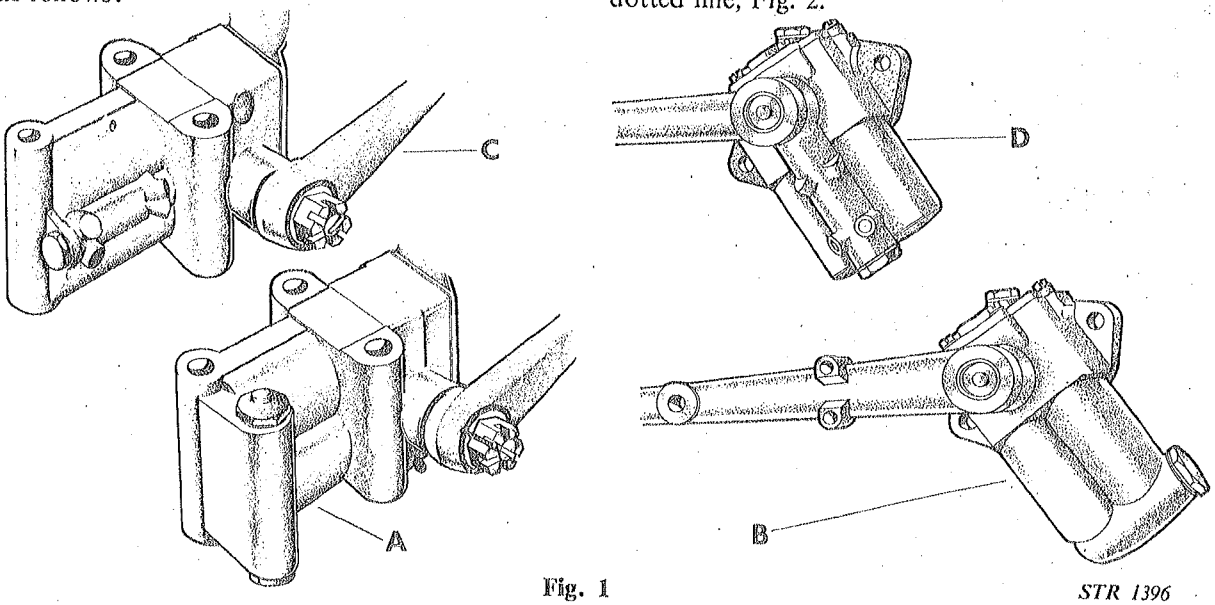

Fig. 1

STR 1396

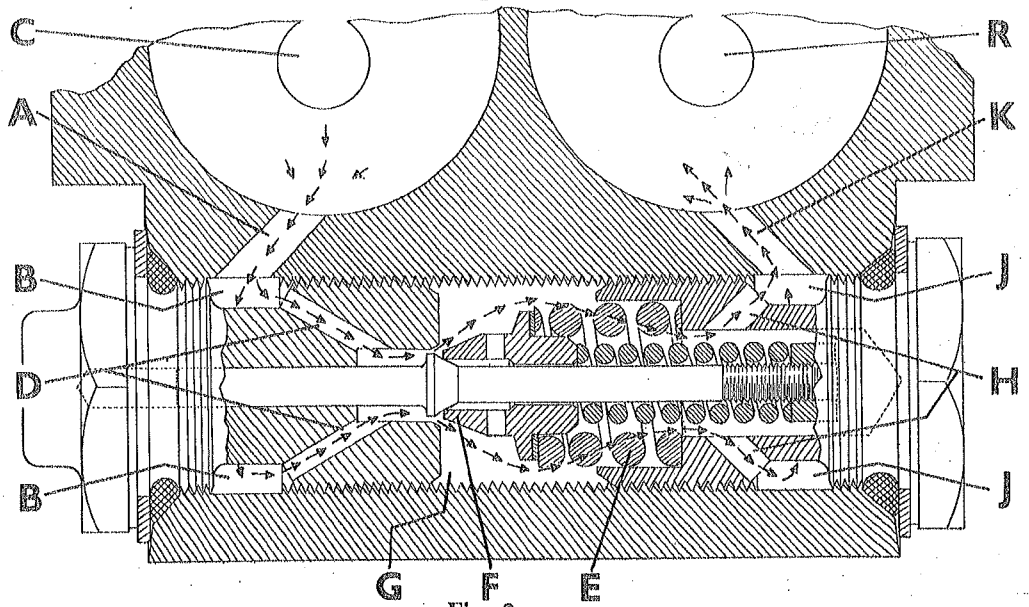

Fig. 2

STR 1397

Continued

FRONT AND REAR SHOCK ABSORBERS—*continued*

On the rebound stroke the oil is forced back along K, J and H to the valve chamber G. The pressure of oil in the valve chamber overcomes the rebound spring L and allows the oil to pass through the drilling M and by the valve N to return along D, B and A to the compression cylinder C—see the dotted line, Fig. 3.

In addition to the co-axial valve, the compression pistons are now fitted with piston rings, and the rebound pistons are fitted with a rubber cup seal.

The advantage of these arrangements is improved performance at higher temperatures with overall efficiency under arduous conditions as well as to reduce the working stresses of the valve springs, thus ensuring consistent operation over long periods of service. It is emphasised that the valves of shock absorbers are carefully set by the manufacturers and no attempt should be made to alter them in any way.

INTERCHANGEABILITY

The new shock absorbers may be used in pairs for replacement purposes.

NOTE: An intermediate type of shock absorber was introduced on the above car—refer to Austin Service Journal, Cars, Volume 24, section "Stores Data", page 9 and to Publication 883B Supplement Number 2, pages 20 and 22. These shock absorbers incorporated the rubber cup seal on the rebound piston only.

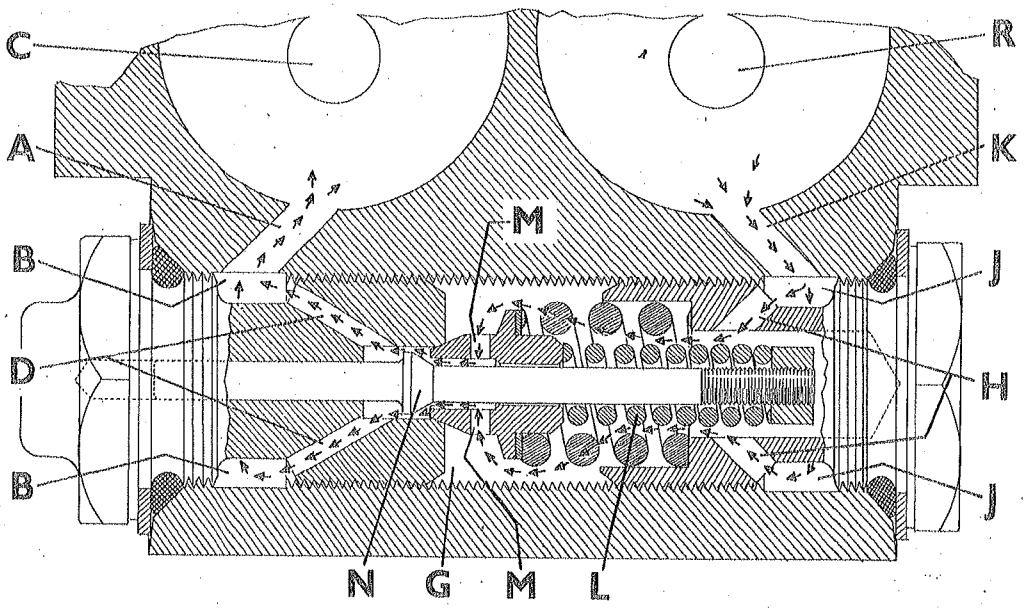

Fig. 3 *STR 1398*

SUMMARY OF ALTERATION

Type	Range	Plate	Description	Number per Vehicle	Austin Part Number	Parts List Publication Number
A 30	C.33066–54826	F.13	Front shock absorber with arm, right hand	1	2A 4157	Pub. 883B, Front Suspension, p. 1
			Front shock absorber with arm, left hand	1	2A 4159	
	C.54827 on		Front shock absorber with arm, right hand	1	2A 4172	
			Front shock absorber with arm, left hand	1	2A 4174	
	C.25621–56281		Rear shock absorber, right hand	1	2A 5349	Pub. 883B, Rear Suspension, p. 2
			Rear shock absorber, left hand	1	2A 5351	
	C.56282 on		Rear shock absorber, with arm and link, right hand	1	2A 5372	
			Rear shock absorber, with arm and link, left hand	1	2A 5374	

SHOCK ABSORBERS

A 40

A co-axial valve arrangement (referred to in this Journal, Volume 24, section "Suspension", pages 14 and 15) has now been incorporated in the front shock absorbers fitted to A 40 Cars and Commercial vehicles. The larger valve chamber A distinguishes the new shock absorber from the old one, which has a smaller valve chamber B—see illustration. In addition to co-axial valves on the front shock absorbers, both front and rear shock absorbers are now fitted with piston rings and rubber cup seals. The external appearance of the rear shock absorbers is unchanged, but the new ones can be identified by the letter P stamped on the shock absorber body.

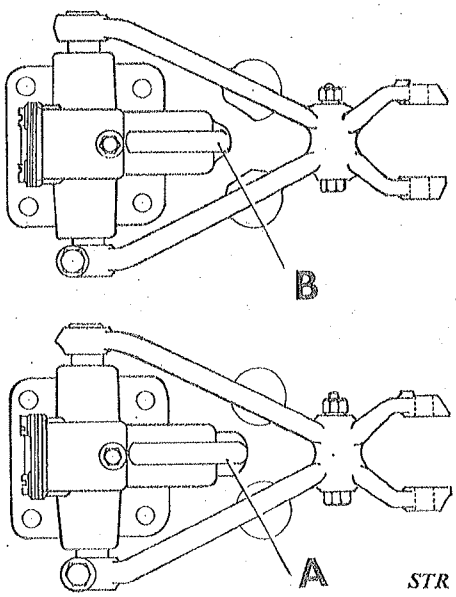

STR 1445

INTERCHANGEABILITY

The new shock absorbers may be used in pairs, for example, a pair of fronts or a pair of rears, for replacement purposes.

SUMMARY OF ALTERATION

Type	Range	Plate	Description	Number per Vehicle	Austin Part Number	Parts List Publication Number
A 40	C.732036–853536		Front shock absorbers with arms (use 1G 4488 in pairs) . . .	2	3H 2858	Pub. 1099, Front Suspension, p. 1
	C.853537 on		Front shock absorbers with arms.	2	1G 4488	
	C.732036–855060		*Rear shock absorber, right hand (use 1G 9630 in pairs) . . .	1	3H 2860	Pub. 1099, Rear Suspension, p. 2
			*Rear shock absorber, left hand (use 1G 9632 in pairs) . . .	1	3H 2862	
	C.855061 on		Rear shock absorber, right hand .	1	1G 9629	
			Rear shock absorber, left hand .	1	1G 9631	

* Not previously listed but see Austin Service Journal, Volume 23—Cars, section "Suspension", pages 9 and 10.

FOR YOUR RECORDS	PARTS LISTS
	STOCK CARDS
	PARTS ORDERED
	ALTERATIONS NOTED

Issue 7

Published July 19, 1954

FRONT SUSPENSION LINK BEARINGS

A 70, Austin-Healey 100

The flangeless type of bearings which were recently introduced for use on the A 40 range of vehicles (see this Journal, Volume 23, section "Suspension", page 3) are now also being used on the A 70 and Austin-Healey 100.

INTERCHANGEABILITY

The modified bearings are interchangeable with their old counterparts.

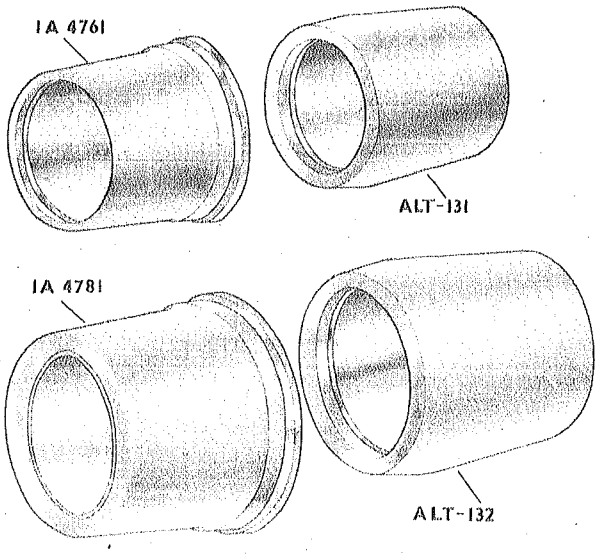

STR 1455

SUMMARY OF ALTERATION

Type	Range	Plate	Description	Number per Vehicle	Austin Part Number	Parts List Publication Number
Austin-Healey 100	C.138031–156135	F 7	Bearings for trunnion links	4	1A 4761	Pub. 1050, Front Suspension, p. 1
	C.156136 on		Bearings for trunnion links	4	ALT–131	
	C.138031–156135	F 21	Bearings for lower links	8	1A 4781	
	C.156136 on		Bearings for lower links	8	ALT–132	
A 70	To C.157684		Bearings for trunnion links	4	1A 4761	Saloon, Pub. 780A, p. 36 Pick-Up, Pub. 853, p. 34
	C.157685 on		Bearings for trunnion links	4	ALT–131	
	To C.157684		Bearings for lower links	8	1A 4781	
	C.157685 on		Bearings for lower links	8	ALT–132	

FOR YOUR RECORDS	PARTS LISTS
	STOCK CARDS
	PARTS ORDERED
	ALTERATIONS NOTED

Issue 8

Published September 20, 1954

FRONT AND REAR SHOCK ABSORBERS

A 70

New front and rear shock absorbers incorporating co-axial valves, piston rings and piston seals have been introduced. The working of the co-axial valves has already been described in this Journal, Volume 24, section "Suspension", pages 14 and 15.

INTERCHANGEABILITY

The new shock absorbers can be fitted in pairs, that is, a pair for the front or a pair for the rear, to replace the old ones.

SUMMARY OF ALTERATION

Description	Number Off	Old Part	New Part	Type and Parts List Publication Number
Rear Shock Absorber with link, right hand	1	3H 2919	1B 8987	A 70, Pubs. 853, p. 31 780A, p. 34
Rear Shock Absorber with link, left hand	1	3H 2921	1B 8989	
Front Shock Absorbers with arms .	2	3H 2915	1B 4347	A 70, Pubs. 853, p. 33, 780A, p. 36

COMMENCING CHASSIS NUMBERS:—

Front Shock Absorbers – –	C.156491
Rear Shock Absorbers – –	C.158689

FOR YOUR RECORDS	PARTS LISTS
	STOCK CARDS
	PARTS ORDERED
	ALTERATIONS NOTED

SHOCK ABSORBERS

Austin-Healey 100

The new co-axial type shock absorbers, referred to in this Journal, Volume 24, section "Suspension", pages 14, 15 are now being fitted to the Austin-Healey 100.

INTERCHANGEABILITY

The new shock absorbers will be supplied for replacements and should be fitted in pairs.

SUMMARY OF ALTERATION

Type	Range	Plate	Description	Number per Vehicle	Austin Part Number	Parts List Publication Number
Austin-Healey 100	C.153855–219136	F.1	Front shock absorbers with arms	2	1B 8935	Pub. 1050, Front Suspension, p. 1
	C.219137 on		Front shock absorbers with arms	2	1B 4403	
	C.138031–220087		Rear shock absorber with arm, right hand . . .	1	1B 8807	
			Rear shock absorber with arm, left hand . . .	1	1B 8808	
	C.220088 on		Rear shock absorber with arm and link, right hand	1	1B 7444	Pub. 1050, Rear Suspension, p. 2
			Rear shock absorber with arm, right hand . . .	1	1B 7445	
			Rear shock absorber with arm and link, left hand .	1	1B 7447	
			Rear shock absorber with arm, left hand . . .	1	1B 7448	

FOR YOUR RECORDS	PARTS LISTS
	STOCK CARDS
	PARTS ORDERED
	ALTERATIONS NOTED

SWIVEL AXLE TOP BUSH

A 30

To facilitate production the bore in the swivel axle for the upper bush has been made the same as for the lower bush. The outside diameter of the new bush A is .818" (20.77 mm.), whereas the diameter of the old bush B is .756" (19.20 mm.) see illustration. The hole in the swivel axle has been increased in diameter from .752" (19.10 mm.) to .815" (20.69 mm.). The inside diameter of the bush has not been altered.

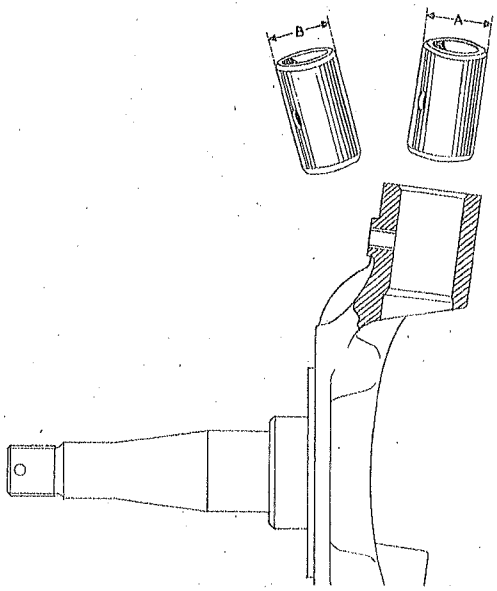

STR 1520

INTERCHANGEABILITY

The new swivel axle with bushes is interchangeable with the old one and the part number remains unchanged. The bushes are not interchangeable.

SUMMARY OF ALTERATION

Type	Range	Plate	Description	Number per Vehicle	Austin Part Number	Parts List Publication Number
A 30	C.101–79638	F2	Swivel axle bushes, top .	2	2A 4012	Pub. 883B, Front Suspension, p. 1
	C.79639 on		Swivel axle bushes, top .	2	2A 4176	

FOR YOUR RECORDS	PARTS LISTS
	STOCK CARDS
	PARTS ORDERED
	ALTERATIONS NOTED

FRONT SUSPENSION LINK BEARINGS

A 70, Austin-Healey 100

Further to the article in this Journal, Volume 24, "Suspension", page 17, the flanged type bearings have been reintroduced on the A 70 and Austin-Healey 100.

INTERCHANGEABILITY

The flanged type of bearings are interchangeable with the flangeless type.

SUMMARY OF ALTERATION

Type	Range	Plate	Description	Number per Vehicle	Austin Part Number	Parts List Publication Number
Austin-Healey 100	C.156136–158336		Bearings for trunnion links	4	ALT-131	Pub. 1050, Front Suspension, p. 1
	C.158337 on	F 7	Bearings for trunnion links	4	1A 4761	
	C.156136–158336		Bearings for lower links .	8	ALT-132	
	C.158337 on	F 21	Bearings for lower links .	8	1A 4781	
A 70	C.157685–158336		Bearings for trunnion links	4	ALT-131	Saloon, Pub. 780A, p. 36 Pick-up, Pub. 853, p. 34
	C.158337 on	J 9	Bearings for trunnion links	4	1A 4761	
	C.157685–158336		Bearings for lower links .	8	ALT-132	
	C.158337 on	J 23	Bearings for lower links .	8	1A 4781	

TORQUE WRENCHES AND SOCKET SETS

Since the publication of torque figures in this Journal, Volume 23, section "Repairs Data", pages 15 and 19, of various nuts, bolts and setscrews used in particular applications, requests have been received for suitable torque wrenches and socket sets.

This equipment can be obtained from any good tool factor, or direct from Messrs. V. L. Churchill & Co. Ltd., Walnut Tree Walk, Lambeth North, London, S.E.11, who market several torque wrenches of varying capacities as listed below.

Size	Capacity	Square Drive
Number 1	8 to 20 lb. ft.	$\frac{3}{8}$" (9.525 mm.)
Number 2	16 to 100 lb. ft.	$\frac{1}{2}$" (12.700 mm.)
Number 3	25 to 150 lb. ft.	$\frac{1}{2}$" (12.700 mm.)
Number 4	125 to 300 lb. ft.	$\frac{3}{4}$" (19.050 mm.)

Numbers 2 and 3 sizes will accommodate the torque wrench loadings which have already been published.

Socket wrench sets can also be obtained from Messrs. V. L. Churchill to suit both Whitworth and American size hexagons for B.S.F. and U.N.F. threaded nuts, bolts and setscrews respectively.

FOR YOUR RECORDS	PARTS LISTS
	STOCK CARDS
	PARTS ORDERED
	ALTERATIONS NOTED

FRONT HUB DUST CAP EXTRACTOR

Austin-Healey 100

A tool for extracting the press-in type dust cap from the front hub has been added to the tool kit supplied with the car. The tool comprises a pillar, threaded internally $\frac{5}{16}$" U.N.F. at one end, and threaded externally $\frac{1}{2}$" U.N.F. at the other end: there are also two washers and a nut. The extractor is used as illustrated by screwing the pillar A onto the bolt B (welded to the dust cap C for extraction purposes): the washers D and nut E are then put in place, and the nut E is tightened until the dust cap C is withdrawn. It is important to hold the end F of the extractor pillar A with a spanner, while the nut E is tightened, to prevent the pillar A from turning and twisting the dust cap.

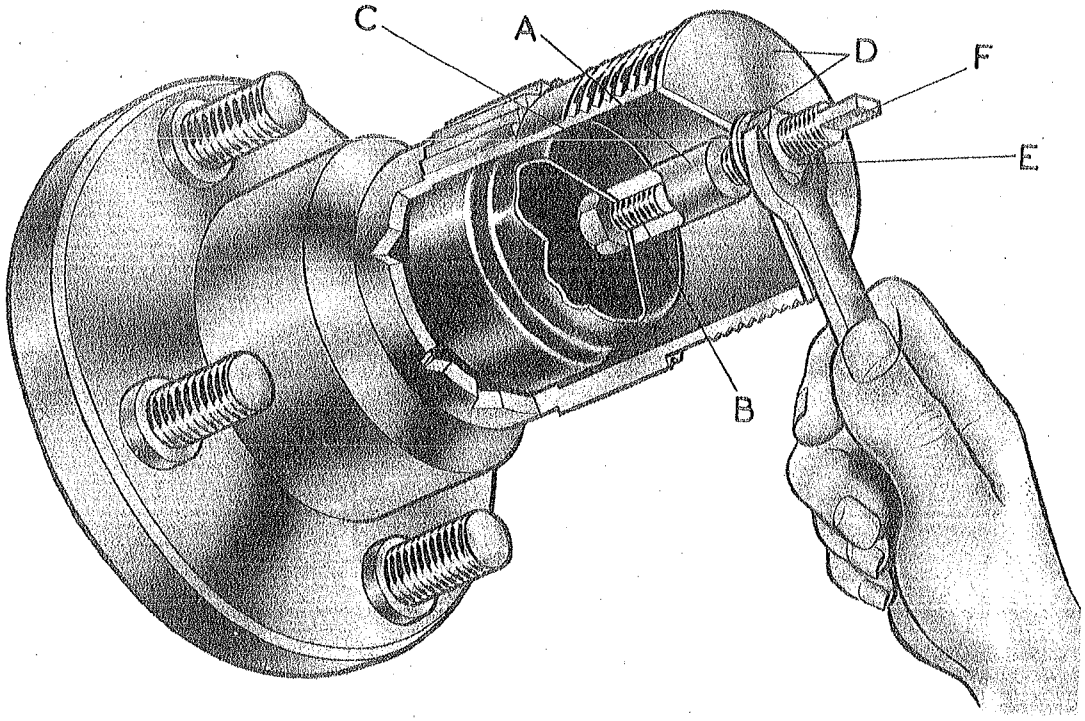

STR 1278

SUMMARY OF ALTERATION

Description	Number Off	New Part	Type
Extractor for front hub dust cap	1	1B 4339	Austin-Healey 100

COMMENCING CHASSIS NUMBERS:—

R.H. Steering – – 148987
L.H. Steering – – 148935

FOR YOUR RECORDS	PARTS LISTS
	STOCK CARDS
	PARTS ORDERED
	ALTERATIONS NOTED

OVERDRIVE UNIT—ANNULUS COUPLING FLANGE OIL SEAL REMOVER

Austin-Healey 100

TOOL NUMBER – – – – GT 176

WEIGHT – – – – – 4½ lb.

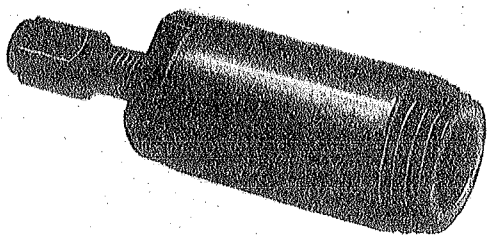

STR 1321

This oil seal remover, of entirely new design, will remove a defective oil seal from the rear end of the overdrive unit.

It consists of a heavy steel body with a tapered thread at one end, and a substantial centre screw.

Flats are provided at the top end of the tool so that the body can be held firmly whilst the centre screw is secured up against the mainshaft.

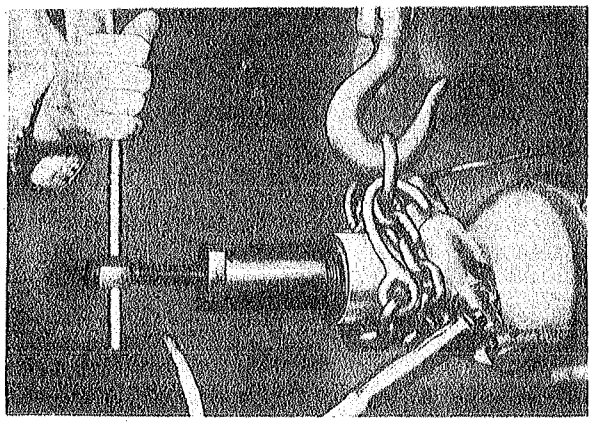

STR 1322

Full details of the method of application can be found in this Journal, Volume 24, section "Gearbox", page 28.

OVERDRIVE UNIT—ANNULUS COUPLING FLANGE OIL SEAL REPLACER

Austin-Healey 100

TOOL NUMBER – – – – GT 177
WEIGHT – – – – – 2 lb.

Tool GT 177 has been designed and introduced to ensure that the oil seal in the overdrive unit casing is correctly fitted.

By this means, neither the oil seal nor the overdrive casing, which is made of aluminium, can be damaged.

The application of the tool is fully described and illustrated in this Journal, Volume 24, section "Gearbox", page 28.

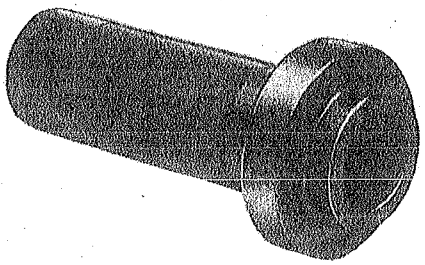

STR 1323

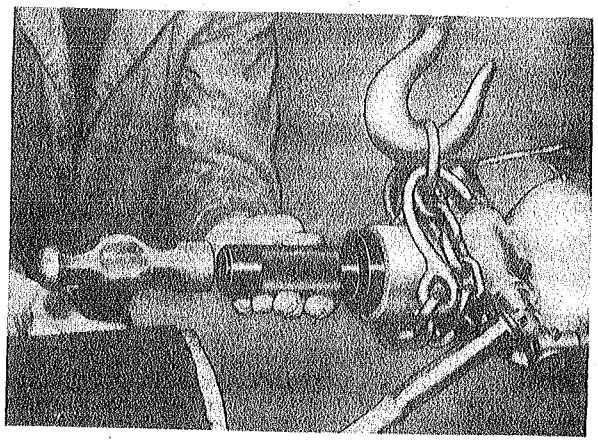

STR 1324

OVERDRIVE UNIT—DUMMY MAINSHAFT

Austin-Healey 100

TOOL NUMBER – – – – GT 185

WEIGHT – – – – – 2¾ lb.

This dummy mainshaft is essential when rebuilding the overdrive unit. Made of high quality steel, to very accurate dimensions, it will ensure speed and accuracy when reassembling.

The application of the dummy mainshaft A is shown in Fig. 2; more comprehensive details can be found in this Journal, Volume 24, section "Gearbox", pages 15 and 22.

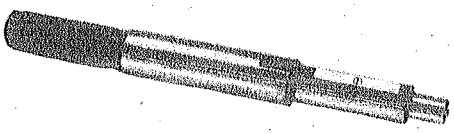

Fig. 1 *STR 1310*

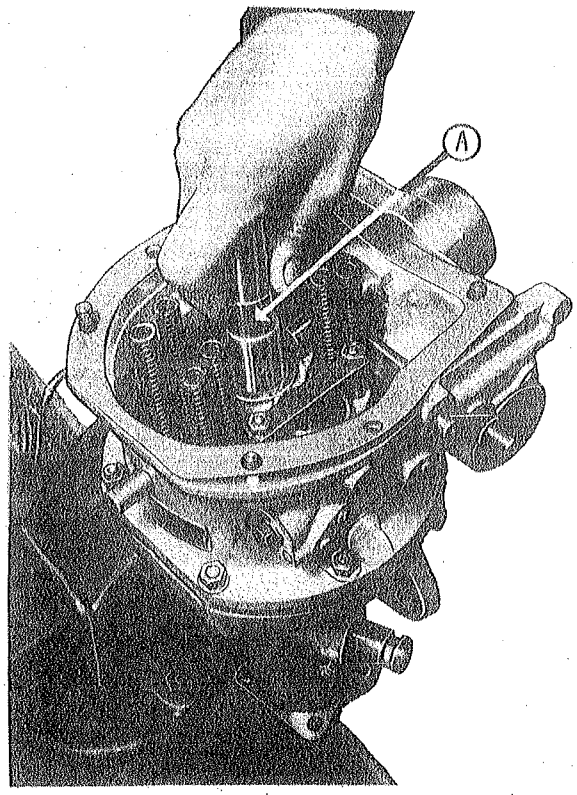

Fig. 2 *STR 1190*

OVERDRIVE UNIT—OIL PUMP BODY REMOVER

Austin-Healey 100

TOOL NUMBER – – – – GT 183

WEIGHT – – – – – 2 lb.

If the oil pump body is to be withdrawn without damage to either the overdrive casing or the oil pump, then this specially designed tool GT 183 must be used. Time will also be saved when called upon to remove a tightly fitting oil pump.

The tool comprises a steel body A, a thrust washer to reduce friction, a centre screw B having a squared end C, to enable the screw to be held by a spanner, and a large wing nut D.

Details of the removal of a pump body appear in this Journal, Volume 24, section "Gearbox", page 17.

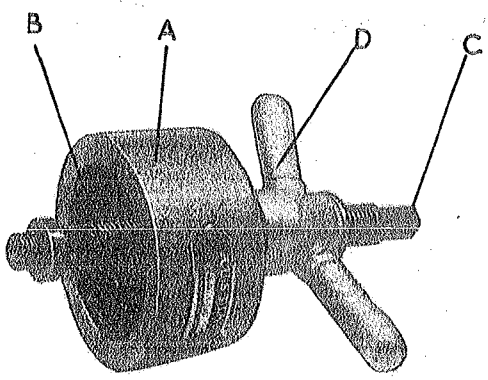

STR 1311

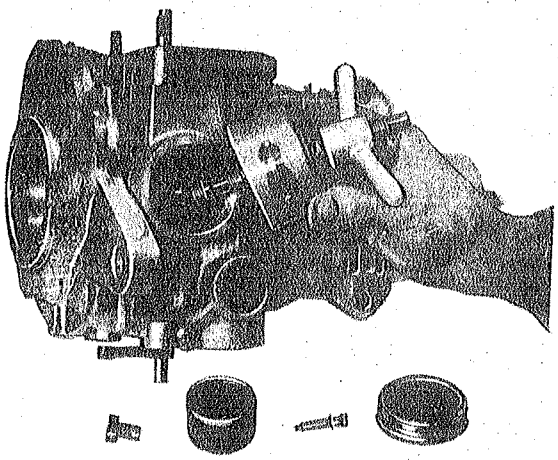

STR 1312

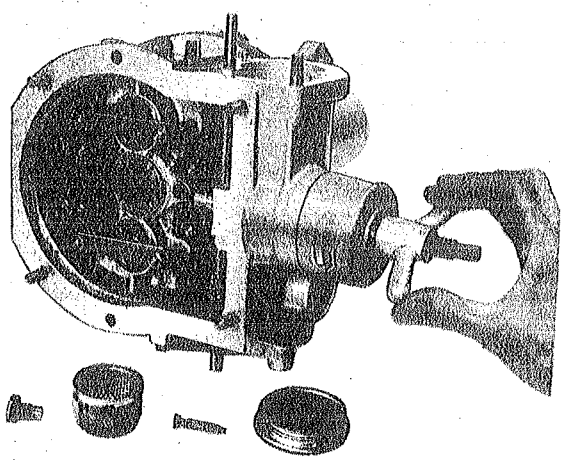

STR 1313

OVERDRIVE UNIT—OIL PUMP BODY REPLACER

Austin-Healey 100

TOOL NUMBER – – – – GT 184
WEIGHT – – – – 1 lb. 2 oz.

Tool GT 184 consists of a body A and two steel guide pegs B. When this tool is used the oil pump body is very accurately positioned in the overdrive unit housing, before, and during its replacement.

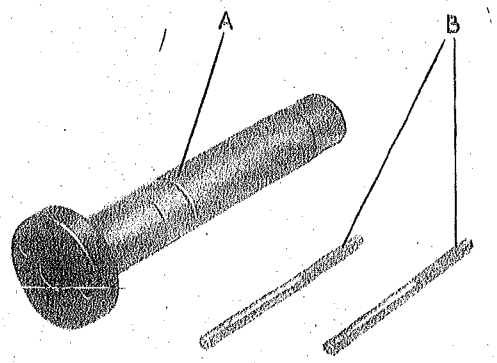

STR 1314

Full particulars of its use appear in this Journal, Volume 24, section "Gearbox", page 17.

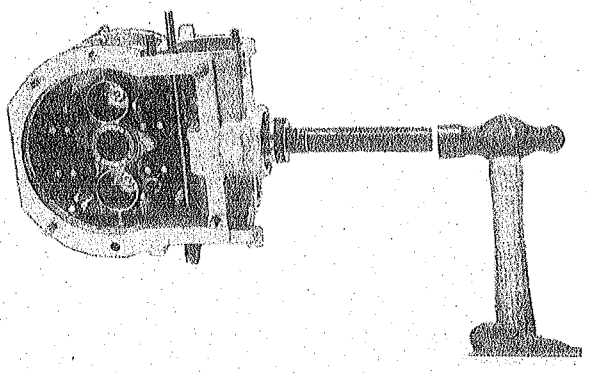

STR 1325

OVERDRIVE UNIT—ACCUMULATOR HOUSING REMOVER

Austin-Healey 100

TOOL NUMBER – – – – GT 182
WEIGHT – – – – – 1¾ lb.

The difficulty of removing the accumulator housing from its bore is completely overcome by the use of this tool.

It consists of a body A, through which is fitted the centre screw B, terminating in a flange C, large wing nut D and a rubber ring E.

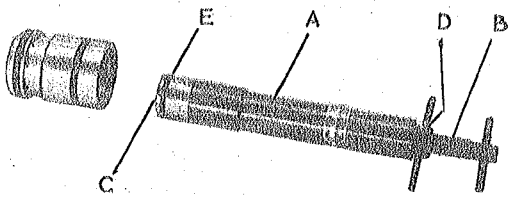

STR 1315

Full details of the operation of this tool can be found in this Journal, Volume 24, section "Gearbox", page 18.

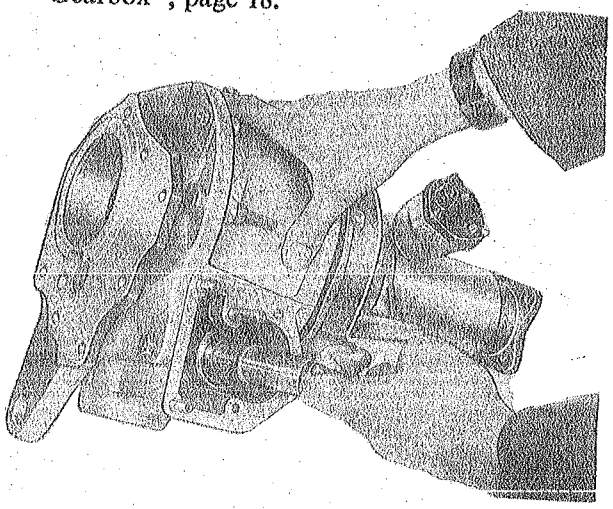

STR 1197

OVERDRIVE UNIT—ACCUMULATOR HOUSING RING GUIDE

Austin-Healey 100

TOOL NUMBER – – – – GT 181
WEIGHT – – – – – ¾ lb.

This ring guide is designed to prevent permanent distortion of the lower rubber ring when it is being fitted to the accumulator housing.

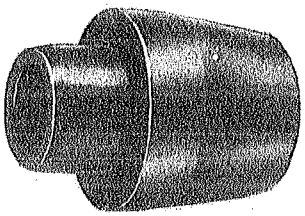

STR 1316

Stretching of the lower rubber ring will take place if it is forced over the full diameter of the housing, but if it be rolled gently up the tapered face of the ring guide, and into position in the lower groove of the housing, no distortion will occur.

The upper ring should be rolled on from the tapered end of the housing to locate it in its groove. The accompanying illustration shows the correct sequence of assembly for the lower ring.

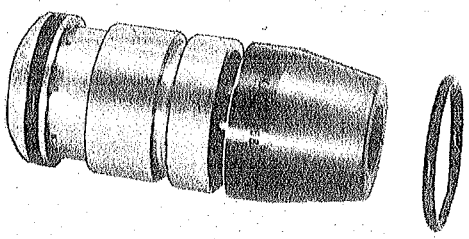

STR 1329

OVERDRIVE UNIT—ACCUMULATOR HOUSING AND OPERATING PISTON RING COMPRESSORS

Austin-Healey 100

TOOL NUMBER	GT 179
WEIGHT	6 oz.
TOOL NUMBER	GT 180
WEIGHT	8 oz.

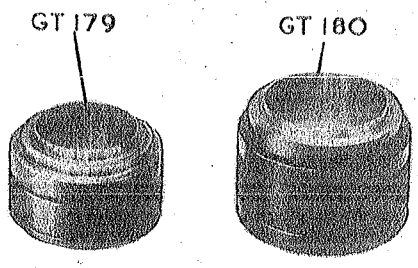

Fig. 1 *STR 1317*

The possibility of breaking piston rings or of damaging the small cylinder bores is entirely overcome by the use of these ring compressors.

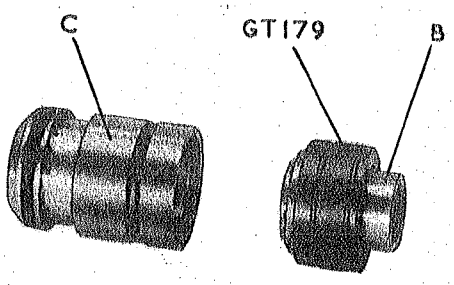

Fig. 2 *STR 1326*

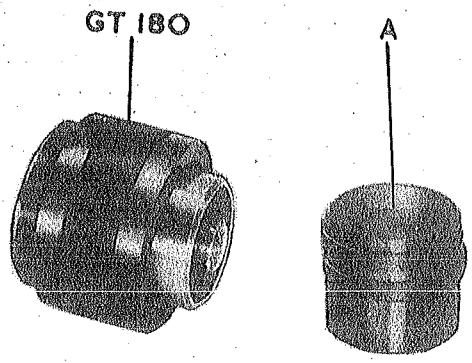

Fig. 3 *STR 1327*

Tool GT 179 is for fitting the accumulator piston with rings B to its housing C (Fig. 2) and GT 180 for fitting the operating piston with rings A (Fig. 3).

Full details of these ring compressors being used can be found in this Journal, Volume 24, section "Gearbox", pages 18 and 20.

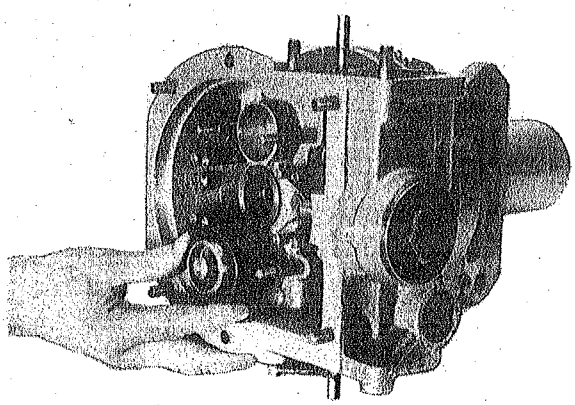

Fig. 4 *STR 1328*

OVERDRIVE UNIT—UNIDIRECTIONAL CLUTCH ASSEMBLY RING

Austin-Healey 100

TOOL NUMBER – – – – GT 178

WEIGHT – – – – – ½ lb.

This precision made assembly ring is an essential tool for reassembling the unidirectional clutch.

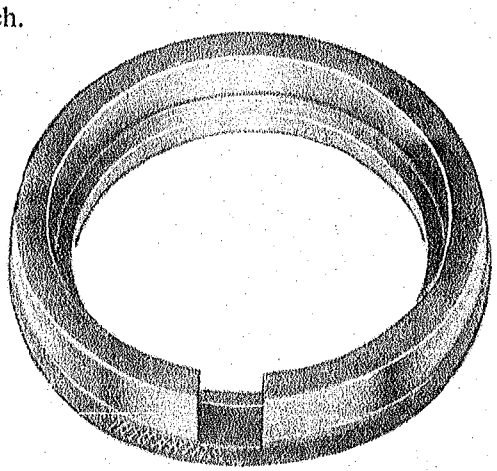

Fig. 1 *STR 1201*

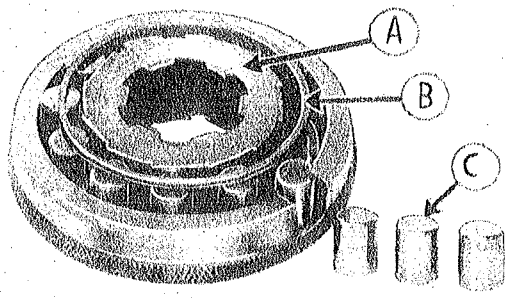

Fig. 2 *STR 1202*

Fig. 2 shows the inner member A, cage and spring B of the clutch being put together; it is important to make sure that the spring is in the right way in order to cause the cage to urge the rollers up the inclined faces of the inner member.

The inner member with cage and spring is then placed into the assembly ring and the rollers C are pushed in through the slot in the rim of the ring. The unidirectional clutch can then be transferred from the tool to the annulus.

RADIATOR FLUSHING ADAPTORS

All Vehicles

TOOL NUMBER – – – – GT 187
WEIGHT – – – – – 1¾ lb.

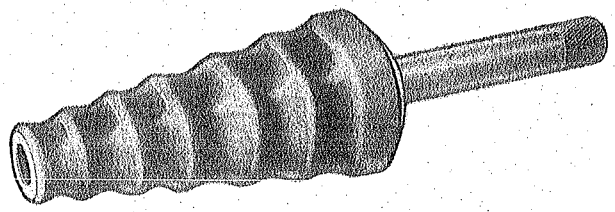

STR 1304

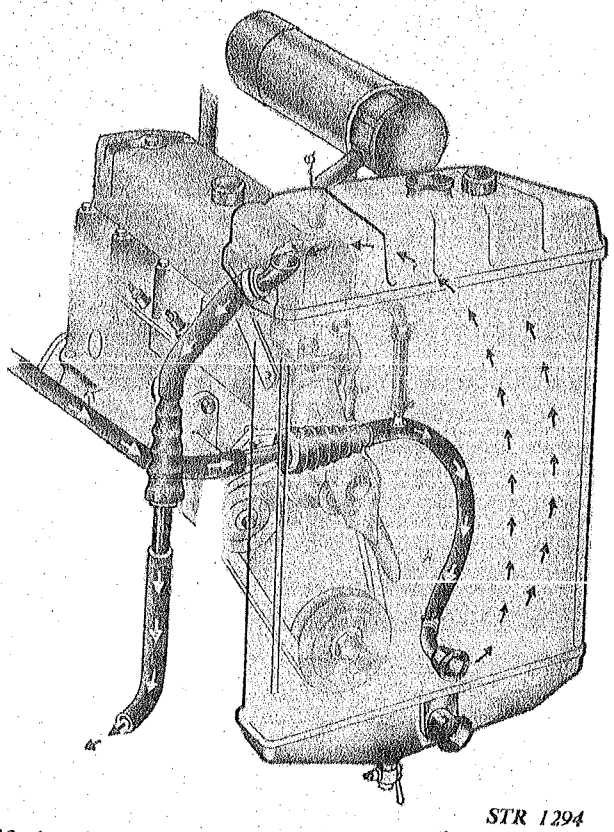

STR 1294

These adaptors, made in alloy and brass, are so designed that every size of hose fitted to post-war Austin vehicles is covered.

By their use, the operation of reverse flushing of radiators, recommended at least twice yearly, will become an easy task.

The adaptors should be used in pairs, one for the radiator inlet hose and one for the outlet hose, and the brass inlet pipe is of 1" (25.400 mm.) diameter. This has been found to be the size of the water mains supply hose generally used, and if there is any variation, it is suggested that a reducing sleeve be obtained locally.

The method and use of these adaptors is fully described in this Journal, Volume 24, section "Radiator", page 1.

GREASE GUN

16-H.P. Taxi and Hire-Car

In response to many requests a grease gun of increased capacity has been introduced in the tool kit of the above models.

SUMMARY OF ALTERATION

Description		Number Off	Old Part	New Part	Type and Parts List Publication Number
Grease gun with adaptor	Alternatives	1	2H 3735	—	16-H.P. Taxi Pub. 558A, p. 58
Grease gun with adaptor	Alternatives	1	2H 4385	—	
Grease gun	Alternatives	1	2H 4664	—	
Grease gun with adaptor . . .		1	—	1F 8324	16-H.P. Hire-Car Pub. 728, p. 63
Adaptor for grease guns . . .		1	—	1F 8326	

COMMENCING CHASSIS NUMBERS:—

16-H.P. Taxi . . . 147091

FOR YOUR RECORDS	PARTS LISTS
	STOCK CARDS
	PARTS ORDERED
	ALTERATIONS NOTED

Published April 26, 1954

TOOLS

Austin-Healey 100

A lead hammer is now being supplied in place of the hide hammer for removing the hub caps from the Austin-Healey 100.

SUMMARY OF ALTERATION

Type	Range	Plate	Description	Number per Vehicle	Austin Part Number	Parts List Publication Number
Austin-Healey 100	C.138031–159256		Hammer, hide . . .	1	3H 3128	Pub. 1050, Tools, p. 1
	C.159257 on		Hammer, lead . . .	1	1B 8996	

TOOL KIT

A 30

A modified grease gun and a modified box spanner are now being supplied with the tool kit of the above car.

INTERCHANGEABILITY: The new parts will be supplied when stocks of the old ones are exhausted.

SUMMARY OF ALTERATION

Type	Range	Plate	Description	Number per Vehicle	Austin Part Number	Parts List Publication Number
A 30	C.101–64649		Grease gun with adaptor	1	3H 2278	Pub. 883B/2, p. 28
			Spanner, box, for sparking plug and gearbox filler and drain plugs .	1	3H 2419	
	C.64650 on		Grease gun	1	2A 5380	
			Spanner, box, for sparking plug	1	2A 5379	

FOR YOUR RECORDS	PARTS LISTS
	STOCK CARDS
	PARTS ORDERED
	ALTERATIONS NOTED

Published September 20, 1954

SERVICE TOOLS

A40/A50 (GS.5, HS.5)

The following tools, already contained within the existing range of AUSTIN MULTI-PURPOSE TOOLS, are also suitable for the A40 (GS.5) and A50 (HS.5).

Description of Tool	Part Number	Service Journal Reference Section "Tools"	
		Volume	Page
ENGINE			
Camshaft liner remover and replacer	GT 124	22	2
Clutch assembly jig	GT 99	21	14
Clutch centraliser	GT 39	19	56
Crankshaft gear and pulley extractor	18G 2 (was GT 2)	19	8
Crankshaft gear replacer	GT 1	19	1
Engine front cover locating bush	GT 3	19	6
Oil release valve grinding-in tool	GT 69	23	13
Piston ring clamp	18G 55 (was GT 55)	20	1
Starting nut spanner	GT 98	23	7
Valve grinding-in tool	GT 29	19	30
Valve rocker bush replacer	GT 51	19	61
Valve seat cutter (exhaust)	GT 25	19	45
Valve seat cutter (inlet)	18G 174 (was GT 174)	...	...
Valve seat cutter handle	GT 27	19	45
Valve seat cutter pilot	GT 31	19	45
Valve seat glaze breaker, exhaust	GT 188	...	...
Valve seat glaze breaker, inlet	18G 196	...	...
Valve seat narrowing cutter, top, inlet	18G 199	...	...
Valve seat narrowing cutter, bottom, inlet ...	18G 200	...	...
Valve seat narrowing cutter, top, exhaust ...	18G 201	...	...
Valve seat narrowing cutter, bottom, exhaust ...	18G 202	...	...
Valve spring compressor	GT 45	19	40
Water pump bearing remover	GT 60	19	15
Water pump bearing replacer	GT 60	19	15

Continued

SERVICE TOOLS—*continued*

Description of Tool	Part Number	Service Journal Reference Section "Tools"	
		Volume	Page
GEARBOX			
Dummy layshaft	GT 141	23	10
First motion shaft nut spanner	GT 5	19	4
First motion shaft assembly replacer	GT 4	19	11
Selector fork rod guide	GT 41	19	37
STEERING			
Steering ball joint separator	GT 125	22	6
Steering wheel extractor	GT 70	20	13
REAR AXLE			
Bevel pinion shaft flange wrench	GT 34	19	31
Bevel pinion setting gauge	GT 191	...	...

Additional Service Tools, special to the A40 (GS.5) and A50 (HS.5) will be notified in subsequent issues of The Austin Service Journal—Cars.

SERVICE TOOLS

Part Number Alterations

Certain Service Tool part numbers have been altered, and it is essential that the new part numbers given below be quoted on all future orders.

These alterations should also be made to the Service Tool List, Publication 941B.

SUMMARY OF ALTERATION

Description	Old Part Number	New Part Number
Crankshaft gear extractor	GT 2	18G 2
Valve seat cutter pilot	GT 27	18G 27
Valve seat cutter	GT 28	18G 28
Piston ring clamp	GT 55	18G 55
Oil pump release valve grinding-in tool	GT 69	18G 69
Starting nut spanner	GT 97	18G 97
Valve spring compressor	GT 106	18G 106
Atomiser testing machine	GT 109	18G 109
Rear hub assembly replacer and bearing remover	GT 145	18G 145
Camshaft liner remover and replacer	GT 147	18G 147
Differential case bearing remover adaptor	GT 172	18G 172
Valve seat cutter	GT 174	18G 174
Bevel pinion setting gauge	GT 191	18G 191
Chain tensioner wrench	SR 482	18G 241
Valve spring compressor	SR 537	18G 106
Cylinder liner extractor	SR 538	18G 227
Valve guide drift	SR 539	18G 228
Valve guide reamer	SR 540	18G 229
Valve seat cutter pilot	SR 541	18G 230
Fan pulley and crankshaft gear extractor (basis tool only)	SR 542	18G 231
Piston ring clamp	SR 543	18G 55
Camshaft sprocket extractor adaptors (2 screwed legs—use with 18G 231)	SR 544	18G 247
Fuel injection pump and camshaft sprocket locking plate	SR 545/6	18G 232
Oil pump driven gear extractor	SR 547	18G 2
Atomiser testing machine	SR 549	18G 109
Swan necked test pipe	SR 550	18G 233
Injector cleaning outfit (Simms)	SR 551	18G 234
Fuel injection pump coupling flange remover	SR 552	18G 235
Fuel injection pump coupling flange wrench	SR 553	18G 236
Fuel injection pump delivery valve extractor	SR 554	18G 237
Fuel injection camshaft bearing remover and replacer	SR 555/6	18G 238
Fuel injection pump bearing outer race remover	SR 557	18G 239
Fuel injection pump bearing outer race replacer	SR 558	18G 240
Injector lap, 6.00 mm.	SR 560	18G 242
Injector lap, 6.01 mm.	SR 561	18G 243
Injector lap, 6.02 mm.	SR 562	18G 244

FOR YOUR RECORDS	
	PARTS LISTS
	STOCK CARDS
	PARTS ORDERED
	ALTERATIONS NOTED

MAINSHAFT BEARING REPLACER FOR OVERDRIVE UNIT

Austin-Healey 100

TOOL NUMBER – – – – GT 186
WEIGHT – – – – – 4 lb.



STR 1309

Improvised tools can do much damage, especially when used to fit ball and roller bearings, and GT 186 has been designed to ensure that the ball bearing fitted to the adaptor plate at the rear end of the gearbox, is fitted speedily and without damage to either adaptor plate, shaft or ball bearing. The use of this tool is more fully described in this Journal, Volume 24, section "Gearbox", page 14.

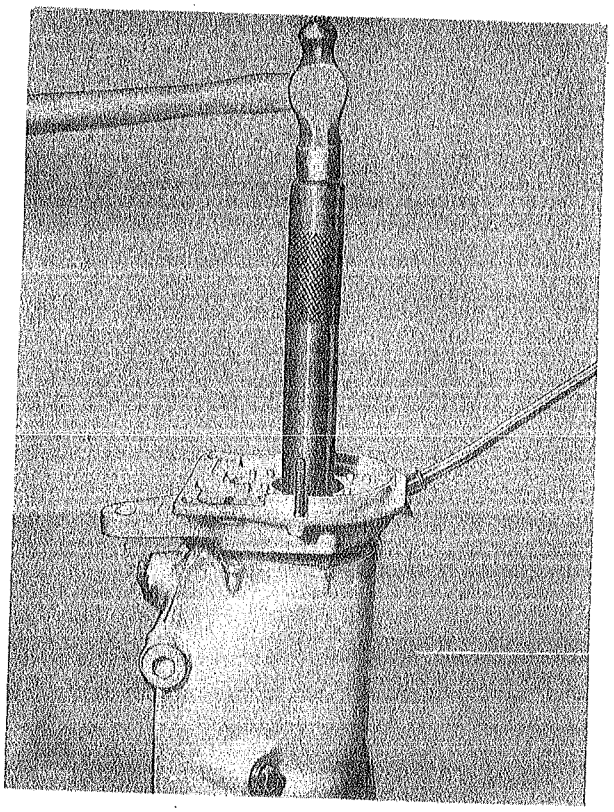

STR 1490

WATER PUMP BODY REFACING TOOL

All Models fitted with carbon seal

TOOL NUMBER – – – – GT 193

WEIGHT – – – – – 8¾ lb.

This hand-operated re-facing tool consists of a high speed cutter mounted on an arbor, a thrust race, adjusting nut, and three pilots.

The three pilots enable the tool to be used on all Austin Models and on all water pumps fitted with a carbon seal.

Full details as to the method to be employed in using this re-facer will be found in this Journal, Volume 24, section "Engine", page 74.

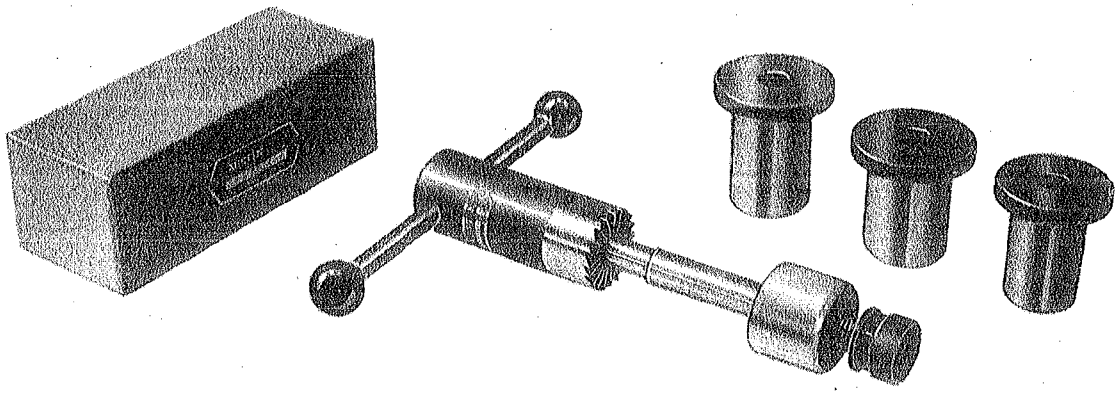

STR 1440

VALVE SEAT GLAZE BREAKERS

All Models

TOOL NUMBERS – – – GT 188
GT 189
GT 190
18G 195
18G 196

WEIGHT – – – – – 6 oz. (each)

Worn valve seats usually have a glass-hard surface. These glaze breakers will be advantageous in preparing the valve seats ready for recutting and finishing. If hardened valve seats inserts have been fitted, then these glaze breakers must not be used: the inserts should be renewed. The cutters of the tools are staggered to prevent scoring the valve seats during the operation.

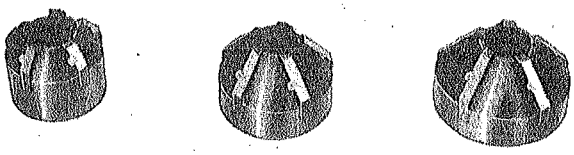

STR 1441

Application:—

A 30 – – – – – – – 18G 195

A 40 exhaust, A 40 inlet (series 2, 3), A 50 exhaust – – – – GT 188

A 40 inlet (series 4 and 5), A 50 inlet – 18G 196

8-H.P., 10-H.P., 12-H.P., 16-H.P., 16-H.P. Taxi and Hire-Car, A 70, A 125, A 135 (inlet and exhaust), Austin-Healey 100, A 90, A 135 (3 carburetters) exhaust – – – GT 189

Austin-Healey 100, A 90, A 135 (3 carburetters) inlet – – – GT 190

Operational details can be found in this Journal, Volume 24, section "Engine", page 75.

VALVE SEAT NARROWING CUTTERS

All Models

TOOL NUMBERS – 18G 197 (top)
18G 198 (bottom)
18G 199 (top)
18G 200 (bottom)
18G 201 (top)
18G 202 (bottom)
18G 203 (top)
18G 204 (bottom)
18G 205 (top)
18G 206 (bottom)

WEIGHT – – – – –4 oz. (each)

These special narrowing cutters have been designed to enable the width of valve seats to be maintained at their original dimension. Two types are available, one having a 15° angle for the top of the seating and the other having a 75° angle for the bottom or inside edge.

The cutters are intended to be used with the standard range of pilots and handle which are available for finishing valve seats.

If hardened valve seat inserts have been fitted, then these narrowing cutters must not be used: the inserts should be renewed.

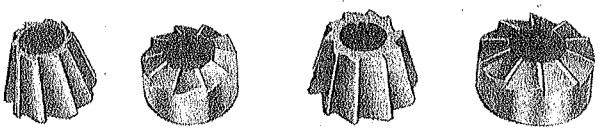

STR 1442

Application:—

A 30 – – – – –	18G 197/198
A 40 (Series 2, 3) inlet and exhaust. A 40 (Series 4, 5) exhaust. A 50 exhaust –	18G 201/202
A 40 (Series 4, 5) inlet, A 50 inlet	18G 199/200
8-H.P., 10-H.P., 12-H.P., 16-H.P., 16-H.P. Taxi and Hire-Car, A 70, A 125, A 135 (inlet and exhaust), Austin-Healey 100, A 90, A 135 (3 carburetters) exhaust – – – –	18G 203/204
Austin-Healey 100, A 90, A 135 (3 carburetters) inlet – –	18G 205/206

Operational details can be found in this Journal, Volume 24, section "Engine", page 76.

FRONT HUB EXTRACTOR ADAPTORS

Austin-Healey 100

TOOL NUMBERS:—	Weight
GT 8G (right hand thread)	2 lb.
GT 8H (left hand thread)	2 lb.
GT 8J	1 lb.

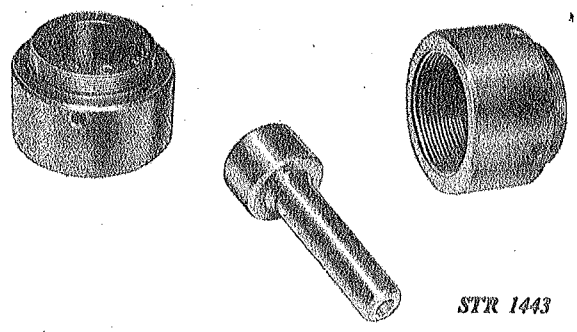

STR 1443

These adaptors, to be used in conjunction with hub extractor GT 8 are threaded internally to suit both the right and left hand threads of Austin-Healey 100 front hubs.

GT 8G has a right hand internal thread to remove the left hand hub, and GT 8H has a left hand internal thread to remove the right hand hub.

The centre screw extension GT 8J is centralised and held in position by locating its large diameter in the adaptor.

This ensures a direct and central pull against the swivel axle.

The application of these adaptors is described and illustrated in this Journal, Volume 24, section "Axle-Front", page 4.

STEERING ARM EXTRACTOR THRUST PADS

All Models, except A 30

TOOL NUMBER – – – GT 75B

WEIGHT (set of 3) – – – 1 lb.

Since the steering rocker and idler shaft now have U.N.F. threads (see this Journal, Volume 23, section "Steering", page 19) a new set of thrust pads have been introduced to be used with GT 75A Steering Arm Remover.

These thrust pads screw on to the rocker or idler shaft, after removal of the nut and washer, thus protecting the threads whilst the arm is being withdrawn.

They are supplied in sets of 3, in a strong fibre box, and should be ordered under part number GT 75B.

Steering rocker and idler shaft threads can be identified as follows—B.S.F. threads—No marking, U.N.F. threads—a letter 'U' is stamped on the end of the shaft as shown at "A" in the illustrations.

Full details of their applications can be found in this Journal, Volume 22, section "Tools", page 1.

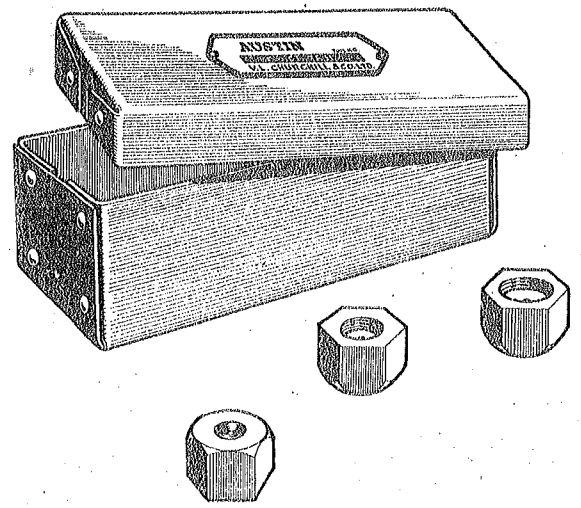

STR 1496

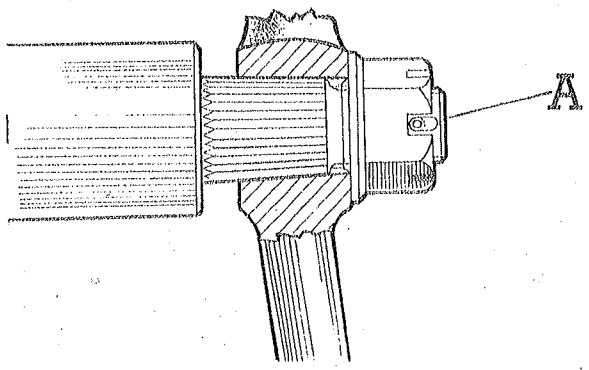

STR 1027A

SERVICE TOOLS

Part Number Alterations

Certain Service Tool part numbers have been altered, and it is essential that the new part numbers given below be quoted in all future orders.

These alterations should also be made to the Service Tool List, Publication 941B.

SUMMARY OF ALTERATION

Description	Old Part Number	New Part Number
Valve seat cutter	GT 25	18G 25
Valve seat cutter pilot	GT 31	18G 31
Front hub extractor adaptor	GT 8G	GT 8K

DIFFERENTIAL CASE BEARING REMOVER ADAPTORS

A 30

TOOL NUMBER – – – – 18G172
WEIGHT – – – – – 3½ lb.

These adaptors are designed to be used with GT.47A for the removal of the differential case bearings fitted to the A 30 rear axle.

The set comprises four segments and one thrust pad complete in a box.

Full details of the use and operation of these adaptors will be found in this Journal, Volume 24, section "Axle—Rear", page 16.

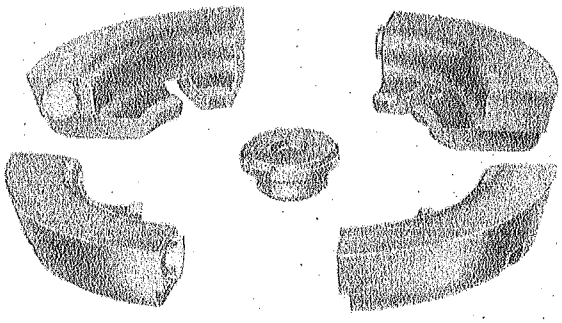

STR 1153

BEVEL PINION BEARING PRE-LOAD GAUGE

A 30, A 40, A 50, A 70, A 90, Austin-Healey 100, A 125 and A 135

TOOL NUMBER – – – – 18G207
WEIGHT – – – – – 4 lb. 6 ozs.

This precision-made pre-load gauge consists of a steel rod A, calibrated in pounds from 3 to 20, along which slides a weight B held in any position required by a knurled headed set screw C. A small gearbox D carries swinging arms E which can be moved to suit any circle from 2⅜" to 4" diameter (60.3 mm. to 101.6 mm.)

These arms are held in position on the bevel pinion flange by means of knurled nuts, F.

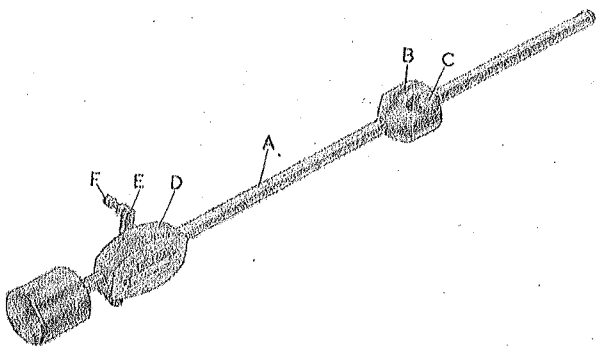

STR 1518A

Details of the full use of this tool can be found in this Journal, Volume 24, section "Axle—Rear", page 16.

DIFFERENTIAL BEARING GAUGE

A30, A40/A50, A90 "Six"

Tool Number 18G 191A
Weight . . . . . 2½lb.

This gauge, designed to be used in conjunction with 18G 191, consists of a machined surface plate A, a gauge block B, two fixing bolts C, and a small indicator finger D, (Fig. 1).

The use of this gauge enables the operator to accurately measure the thickness of differential bearings, which must be taken into consideration when determining the number of shims required to give the correct amount of back lash between crown wheel and bevel pinion. The surface plate, bolts, and finger can also be used with the dial indicator to check back lash, (Fig. 2).

Full details of the use and range of this tool will be published in this Journal, section, Axle-Rear.

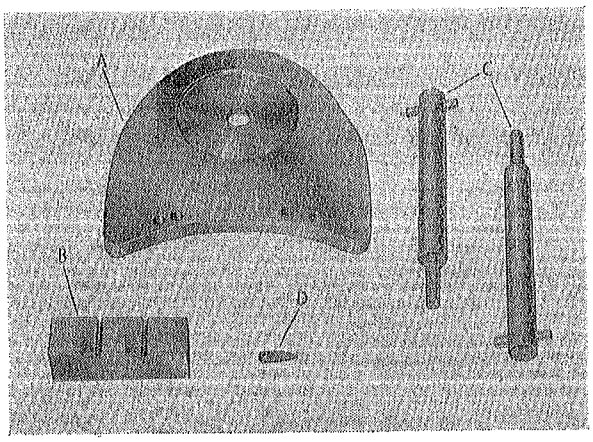

Fig. 1 *STR 1523*

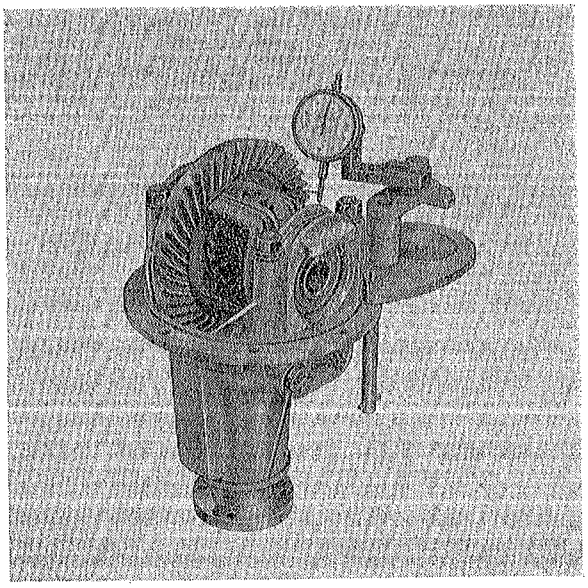

Fig. 2 *STR 1527*

BEVEL PINION SETTING GAUGE

A30, A40/A50, A90 "Six", A125 and A135

Tool Number 18G 191
Weight . . . . . 3 lb.

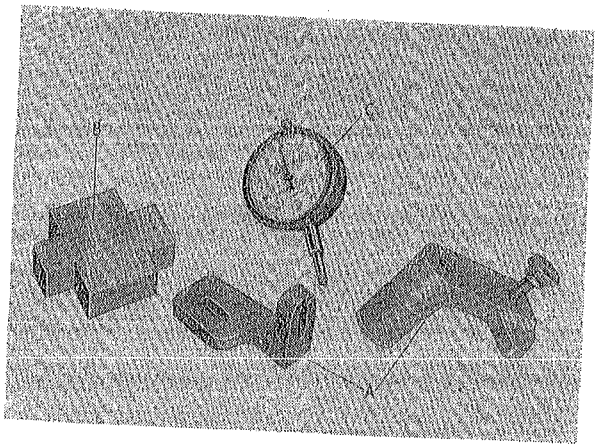

STR 1524

This accurate setting gauge consists of a magnetic pillar and bracket A, fourstep gauge block B, and a dial indicator C.

This equipment is essential if accurate locating of the bevel pinion in the differential gear carrier is to be achieved. Unless this is done a reconditioned axle will not give the desired performance.

The application of this tool does not apply to A30 rear axles fitted prior to chassis number 15779.

Full details as to the use of this setting gauge will be published in this Journal, section, Axle-Rear.

FOR YOUR RECORDS	PARTS LISTS
	STOCK CARDS
	PARTS ORDERED
	ALTERATIONS NOTED

PROPELLER SHAFT

A 30

A new propeller shaft using larger size universal joints has been introduced. The bevel pinion flange on the rear axle has been made larger to suit the new shaft, and new bolts and nuts are used to secure the flanges together.

INTERCHANGEABILITY

The new propeller shaft can be used for replacements of the old ones on AS.4 and A2S.4 series cars provided that the new bevel pinion flange part number ATA 7056 together with the new fixing bolts are also fitted. It can also be fitted to AS.3 series cars subsequent to chassis number 15779 provided that the new bevel pinion flange and fixings are fitted together with the new AS.4 series stabilizer bar, part number 2A 5334. On AS.3 series cars prior to chassis number 15779 the new propeller shaft can only be fitted if the new gear carrier assembly 2A 7230 is also fitted, together with the stabilizer bar 2A 5334.

SUMMARY OF ALTERATION

Type	Range	Plate	Description	Number per Vehicle	Austin Part Number	Parts List Publication Number
A 30	C.101–49777		Propeller shaft assembly	1	2A 7017	Pub. 883B, Propeller Shaft, p. 1
			Bolts for flange	4	2A 7018	
			Nuts for bolts	4	52K 301	
			Lockwashers	2	6K 632	
			Flange yoke	1	17H 3809	
			Sleeve yoke	1	17H 3810	
			Journal assemblies with bearings and snap rings	2 sets	P.309	
			Snap rings	8	17H 3811	
			Lubricators for journal assemblies	2	17H 3813	
			Washers for lubricators	2	17H 3814	
	C.49778 on		Propeller shaft assembly	1	2A 7229	
			Bolts for flange	4	HBZ 0510	
			Nuts for bolts	4	LNZ 205	
			Spring washers	4	LWZ 105	
			Flange yoke	1	17H 3828	
			Sleeve yoke	1	17H 3825	
			Journal assemblies with bearings and snap rings (was P.300)	2 sets	8G 3000	
			Snap rings	8	7H 3877	
			Lubricators for journal assemblies	2	7H 3858	

Continued

FOR YOUR RECORDS	PARTS LISTS
	STOCK CARDS
	PARTS ORDERED
	ALTERATIONS NOTED

PROPELLER SHAFT—*continued*

SUMMARY OF ALTERATION—*continued.*

Type	Range	Plate	Description	Number per Vehicle	Austin Part Number	Parts List Publication Number
A 30	C.15779–43420		*Rear axle assembly, right hand steering (use 2A 7223)	1	2A 7193	Pub. 883B, Rear Axle, pp. 1 and 3
			*Rear axle assembly, left hand steering (use 2A 7223)	1	2A 7194	
	C.43421–49777		*Rear axle assembly, right hand steering . . .	1	2A 7223	
			*Rear axle assembly, left hand steering . . .	1	2A 7224	
	C.43421–49777		Gear carrier with differential case and gears. .	1	2A 7225	
	C.15779–49777		Flange for bevel pinion .	1	ATA 7061	
	C.49778 on		Rear axle assembly, right hand steering . . .	1	2A 7234	
			Rear axle assembly, left hand steering . . .	1	2A 7235	
			Gear carrier with differential case and gears. .	1	2A 7230	
			Flange for bevel pinion .	1	ATA 7056	

* Not previously listed.

PROPELLER SHAFT FIXINGS

A 40

The use of lockwashers for securing the propeller shaft bolts has now been discontinued, and "Nyloc" self locking nuts are being used in place of the plain nuts used hitherto.

INTERCHANGEABILITY

New "Nyloc" nuts should be used for service purposes in place of the plain nuts and lockwashers.

SUMMARY OF ALTERATION

Type	Range	Plate	Description	Number per Vehicle	Austin Part Number	Parts List Publication Number
Saloon	C. 601669–601686 C. 606355–606462 C. 606950–606961 C. 607675–608000 C. 609061–609131 C. 609260–866474		Nuts for flange bolts. Lockwashers . . .	4 2	2K 3976 2K 5913	Pub. 1099, Propeller Shaft, p. 1
Commercials	C. 609133–866474					
Saloon and Commercials	C. 866475 on		Self-locking "Nyloc" Nuts for flange bolts	4	6K 541	

FOR YOUR RECORDS	PARTS LISTS
	STOCK CARDS
	PARTS ORDERED
	ALTERATIONS NOTED

Published July 19, 1954

OVERDRIVE COUPLING FLANGE

Austin-Healey 100

Coupling flange bolts with "D" shaped heads (which are already in use on the rear coupling flange) have now been introduced for the front of the propeller shaft. The overdrive coupling flange has been modified to provide a register to locate the head of the new bolts. The lockwashers which were formerly used on the rear flange only are now used to secure the bolts of the front coupling flange.

INTERCHANGEABILITY

The new coupling flange together with the new bolts and lockwashers can be used together to replace the old flange.

SUMMARY OF ALTERATION

Type	Range	Plate	Description	Number per Vehicle	Austin Part Number	Parts List Publication Number
Austin-Healey 100	C. 138031–155283	CA 15	Coupling flange	1	7H 5887	Pub. 1050, Gearbox and Overdrive, p. 7
	C. 155284 on	CA 15	Coupling flange	1	17H 5807	
	C. 138031–155283		Bolts for flange to overdrive flange . . .	4	2K 8688	Pub. 1050, Propeller Shaft, p. 1
			*Nuts for bolts	4	2K 3977	
			Lockwashers for bolts . .	4	1B 7386	
	C. 155284 on		Bolts for flange to overdrive flange	4	2K 7491	
			Nuts for bolts	4	2K 3977	
			Lockwashers	2	2K 5914	

*Not previously listed.

FOR YOUR RECORDS	PARTS LISTS
	STOCK CARDS
	PARTS ORDERED
	ALTERATIONS NOTED

PROPELLER SHAFTS

A40/A50

The propeller shafts fitted to the saloon and light commercial vehicles are almost identical in appearance, so much so, that it is possible for stocks to be mixed in the stores and for the wrong shafts to be fitted in service.

The shafts can be identified quite easily by their length taken from the end of the shaft to the face of the flange coupling.

The length of the saloon propeller shaft 1G 7509 is 50 $\frac{5}{32}$" (1273.969 mm.), and the light commercial shaft 1G 7518 is 51 $\frac{21}{32}$" (1312.068 mm.).

SNOW CHAINS

A 30

If snow chains are fitted to the A 30 they should be of the "strap" type as illustrated below. After fitment, the ends of the straps should be turned back and tucked into the buckle to prevent them from fouling the mudwings when the wheels are in motion.

"Chain" type snow chains have been found to be unsuitable, due to the limited clearances between the body, rear road springs and snow chains.

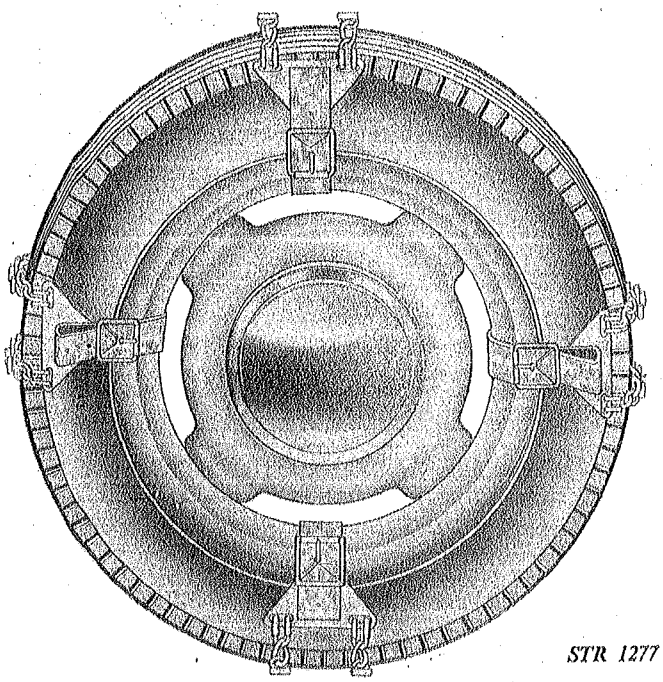

STR 1277

ROAD WHEELS

A 40 Sports

Ventilated road wheels are now available for the A 40 Sports car.

They are interchangeable in sets with the non-ventilated ones.

SUMMARY OF ALTERATION

Description	Number Off	New Part	Parts List Publication Number
Road Wheels, ventilated	5	1G 8052	Pub. 805, p. 61

WHEEL BALANCE WEIGHTS

When removing and refitting tyres, there is a possibility of the lead weights, which are clipped to the wheel rim, becoming dislodged by levers or cover beads and falling inside the tyre, thus causing premature failure of both tyre and inner tube.

When a tyre is removed, or another one fitted, the balance may be disturbed so it is advisable to rebalance the wheel and tyre.

Therefore, all balance weights should be removed with a suitable tool prior to deflating the tyre and the commencement of removal.

If balancing facilities are not available, the tyre should be fitted in accordance with the standard instructions applying to balance marks on both tyre and inner tube.

Finally, in addition to the precautions already referred to, all tyres should be carefully examined inside for foreign objects immediately prior to the insertion of the inner tube or refitment to the wheel.

FOR YOUR RECORDS	PARTS LISTS
	STOCK CARDS
	PARTS ORDERED
	ALTERATIONS NOTED

Published March 1, 1954

ROAD WHEELS AND BRAKE DRUMS

A 70, A 90

New road wheels have been introduced to prevent possible failures when vehicles are being used in territories with bad roads, and also to prevent distortion of the wheel due to over-tightening of the wheel nuts in service. The new road wheel, see Fig. 1, has a modified centre pressing to increase the area of contact between the brake drum and the road wheel. Additional strength has been added to the wheel by incorporating pressed stiffening ribs. The shape of the brake drum has been modified slightly to permit the use of the new wheel, the diameter of the machined face on the brake drum has been increased and the wheel stud holes are now stepped to increase the area of contact with the road wheel, see Fig. 2. The wheel and brake drum assembled together is shown in Fig. 3, which clearly shows the difference between the old and new arrangements.

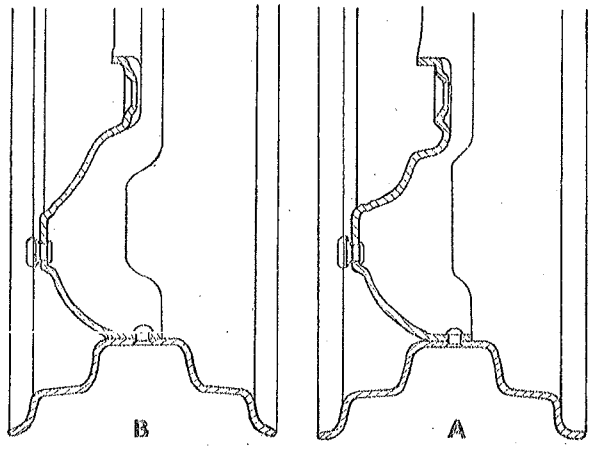

Fig. 1 *STR 1498*

The new road wheel, A, has been modified at the area around the wheel stud holes to provide a greater seating area than B, the old wheel.

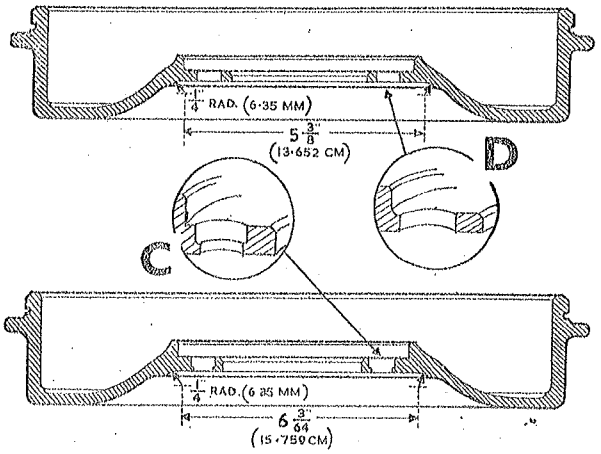

Fig. 2 *STR 1499*

The new brake drum, C, has a larger diameter road wheel gacing than D the old one, and the stud hole is stepped instead of plain.

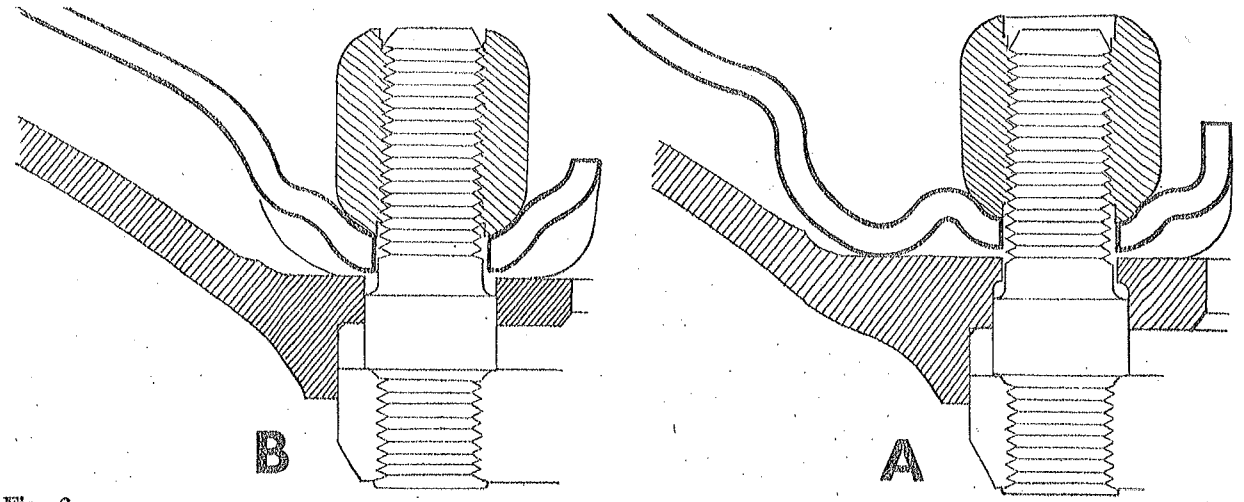

Fig. 3 *STR 1500*

The new road wheel and brake drum arrangement, A, gives a greater bearing area than B, which is the old arrangement.

Continued

Printed in England, November 15, 1954

ROAD WHEELS AND BRAKE DRUMS—*continued*

INTERCHANGEABILITY

On A 70 (BS.3) Hereford Saloons and the A 70 Countryman (BW.4) the new road wheel will not fit the old brake drums; the new road wheel must only be fitted in sets (five wheels) together with a set of four of the new brake drums. Note: To disregard these instructions would prove to be dangerous, as when the wheel nuts are tightened the hub of the wheel would be distorted. The new brake drums may, however, be used individually to replace the old ones. On the A 70 (BS.2) Hampshire Saloons the new road wheels and the new brake drums are separately interchangeable, that is, a new wheel may be used with an old brake drum, or a new brake drum with an old wheel. On the A 90 (BD.2) Convertible and the A 90 (BE.2) Sports Saloon, prior to the introduction of full hydraulic brakes, the new wheels and brake drums are separately interchangeable, but they cannot be fitted to A 90 cars having full hydraulic brakes or ribbed brake drums (see this Journal, Volume 20, section "Brakes", pages 11–20).

The old type A 70 (BS.3) road wheels and brake drums will continue to be available for service purposes. The new type A 70 (BS.2) and A 90 road wheels and brake drums will be supplied for replacements of the old ones when stocks of the old are exhausted. The ribbed brake drums, and wheels to suit, will continue to be available for servicing A 90 cars fitted with full hydraulic brakes.

SUMMARY OF ALTERATION

Description	Number Off	Old Part	New Part	Type and Parts List Publication Number
Brake drums	2	1B 4276	1B 4344	A 70, Pub. 780A, p. 38
Brake drums	2	1B 4276	1B 4344	A 70, Pub. 780A, p. 46
Road wheels	5	1B 8019	1B 4342	A 70, Pub. 780A, p. 66
Brake drums	2	1B 4246	1B 4344	A 70, Pub. 603A, p. 43 A 90, Pub. 787, p. 42
Brake drums	2	1B 4246	1B 4344	A 70, Pub. 603A, p. 56 A 90, Pub. 787, p. 52
Road wheels	5	1B 8026	1B 4343	A 70, Pub. 603A, p. 81 A 90, Pub. 787, p. 81

FOR YOUR RECORDS	PARTS LISTS
	STOCK CARDS
	PARTS ORDERED
	ALTERATIONS NOTED

ROAD WHEELS

Austin-Healey 100

The road wheels have been re-designed to increase the safety margin and reduce the possibility of spoke breakages when travelling at very high speeds. The new wheels are similar to the old ones but the shape of the centre lock hub has been modified to permit the use of spokes which have a less acute bend at the butt end—see illustration. In addition the wheel rim is now made from 11 S.W.G. (.116 in.–2.946 mm.) material in place of 13 S.W.G. (.092 in.–2.337 mm.).

INTERCHANGEABILITY

The new road wheels and the rims are separately interchangeable with their old counterparts, and will be supplied for replacements. The new spokes cannot be used for replacements on the old type wheel. Hub centres cannot be supplied separately.

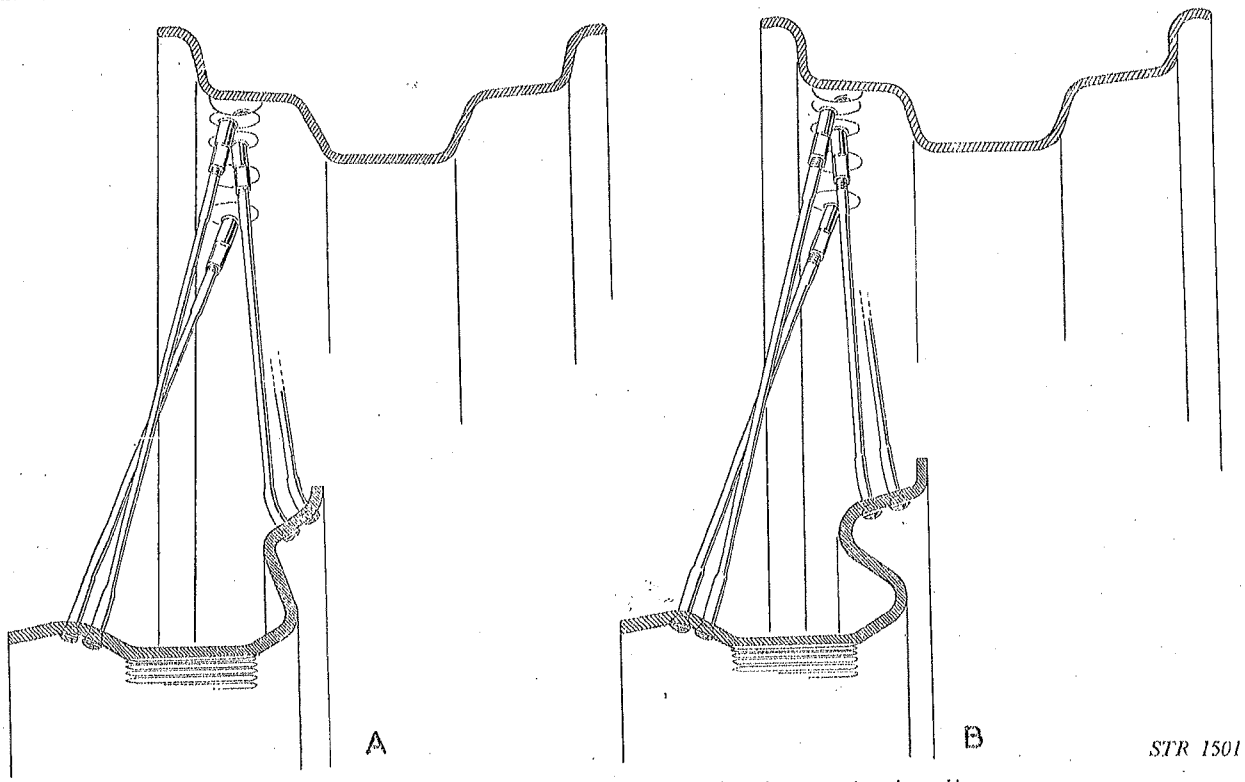

STR 1501

The new wheel B is interchangeable with the old one A, but the spokes are not interchangeable.

SUMMARY OF ALTERATION

Type	Range	Plate	Description	Number per Vehicle	Austin Part Number	Parts List Publication Number
BN.1	C.138031–159801		Road wheels, centre lock	5	1B 8033	Pub. 1050, Road Wheels, p. 1
			Rims	5	7H 1710	
			Spokes, long	80	7H 1707	
			Spokes, short	160	7H 1708	
	C.159802 on		Road wheels, centre lock	5	1B 8048	
			Rims	5	7H 1804	
			Spokes, long	80	7H 1806	
			Spokes, short	160	7H 1805	

FOR YOUR RECORDS	PARTS LISTS
	STOCK CARDS
	PARTS ORDERED
	ALTERATIONS NOTED

Published November 15, 1954