AKD 1151
FIFTH EDITION

The

AUSTIN-HEALEY 3000

(SERIES BN7 AND BT7)

SERVICE PARTS LIST



- A plastic binder (Part No. AKD 1575) is available for this Parts List.
- This list embodies Parts List Amendments up to and including PAU/2522

B.M.C. SERVICE LIMITED

COWLEY · OXFORD · ENGLAND

Telephone – – – – – – – – Oxford 77777
Telex – – – BMC Serv Oxford 83145 and 83146
Telegrams – – – – BMC Serv Telex, Oxford
Cables – – – – BMC Serv Telex Oxford, England
Codes – – Bentley's, Bentley's Second Phrase, A.B.C. (5th and 6th Editions), Western Union and Private

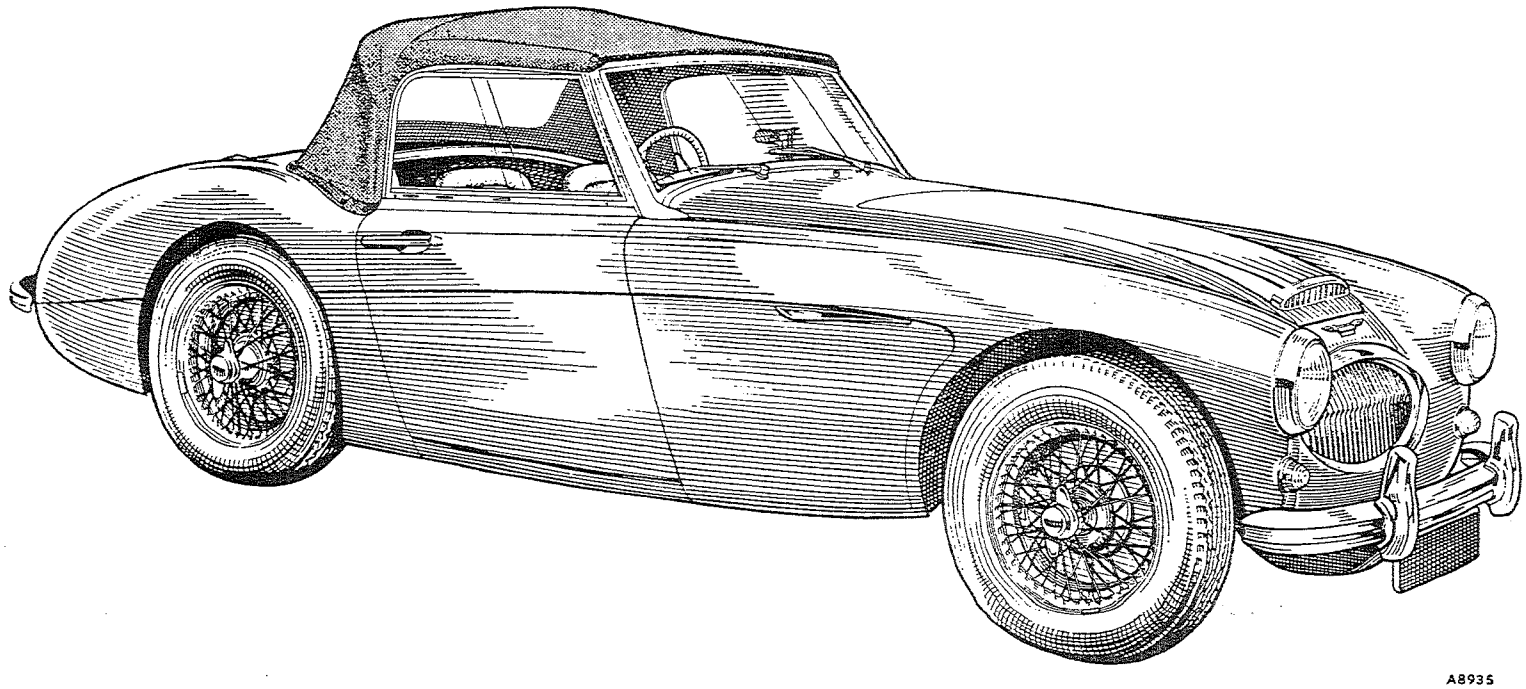

The Austin-Healey 3000 Mk. II (Series BN7)

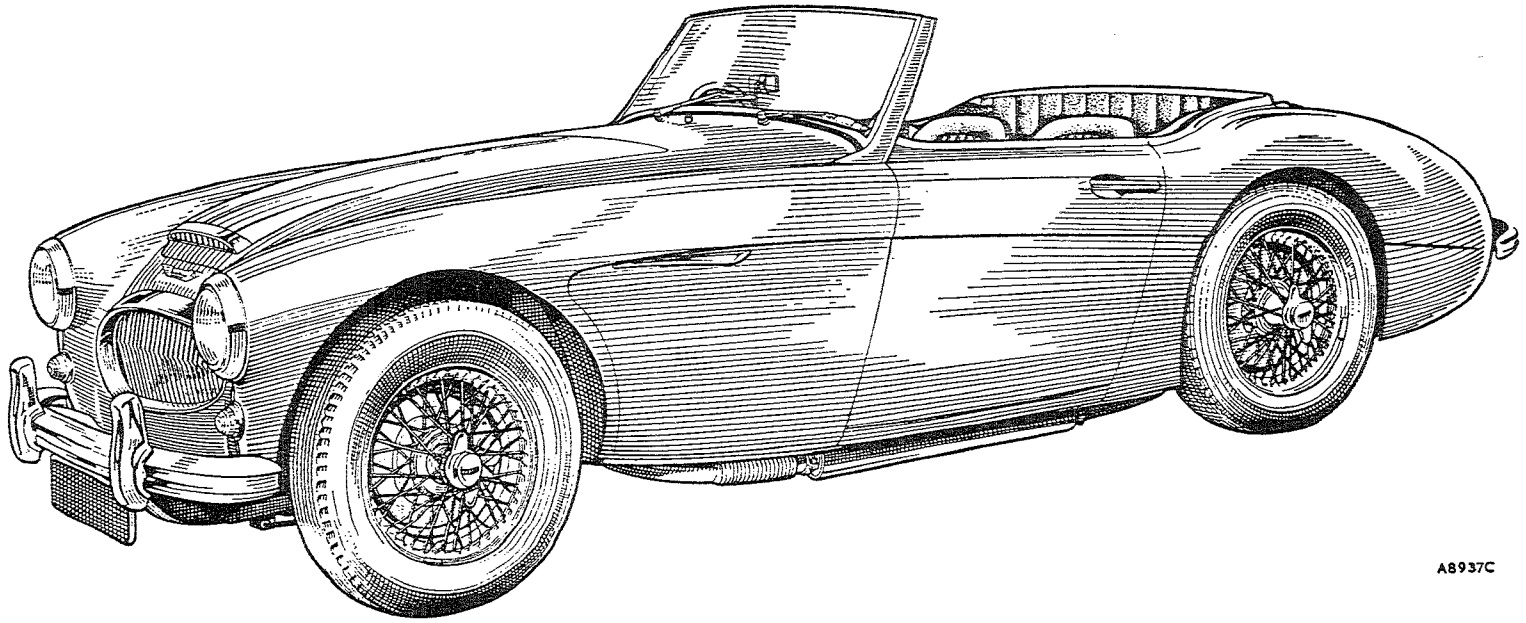

The Austin-Healey 3000 Mk. II (Series BT7)

AUSTIN-HEALEY 3000 (Series BN7 and BT7)

MODEL	COMMENCING		FINISHING	
	CAR No.	ENGINE No.	CAR No.	ENGINE No.
The Austin-Healey 3000 (Series BN7 and BT7)	101	29D-U-H101	13750	29D-U-H26212
The Austin-Healey 3000 Mk. II (Series BN7 and BT7)	13751	29E-U-H101	BN7-18888 BT7-19853	29E-U-H5799

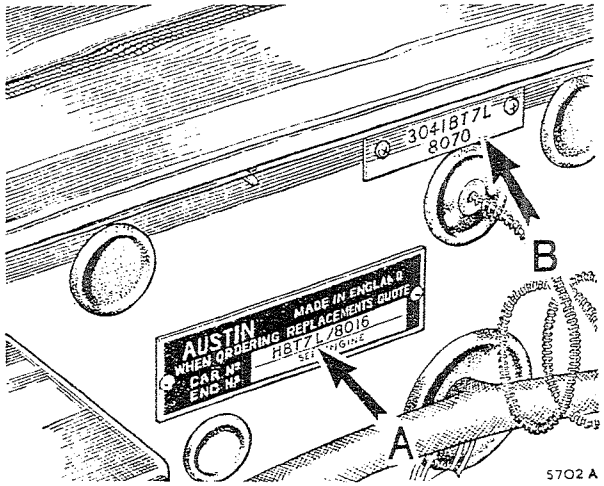

The Car Number (A) and the **Body Number** (B) are stamped on plates secured to the right-hand side of the dash panel

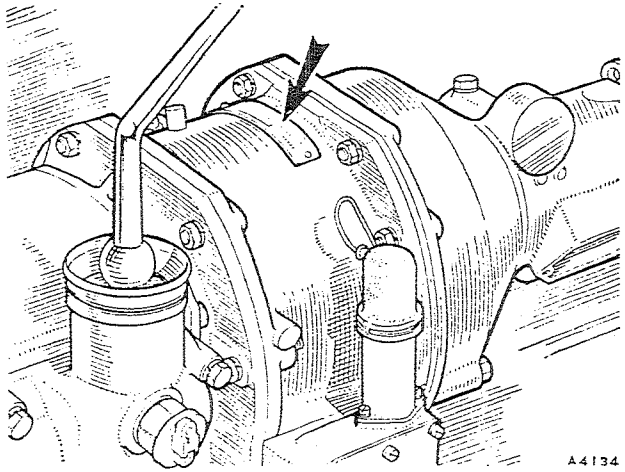

The **Overdrive Number** is stamped on a plate secured to the top of the unit

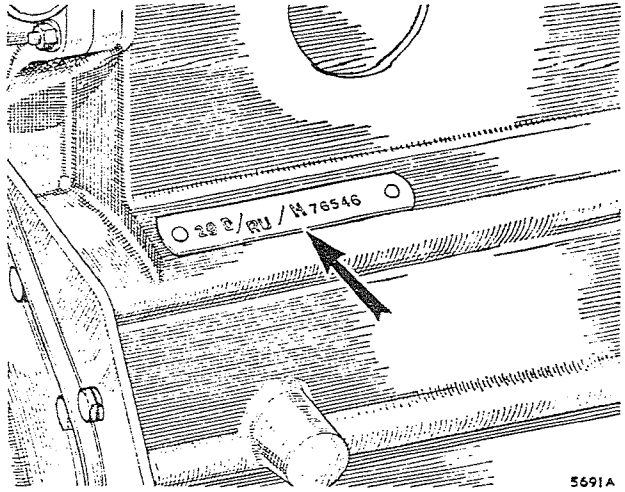

The **Engine Number** is stamped on a plate secured to the front left-hand side of the cylinder block

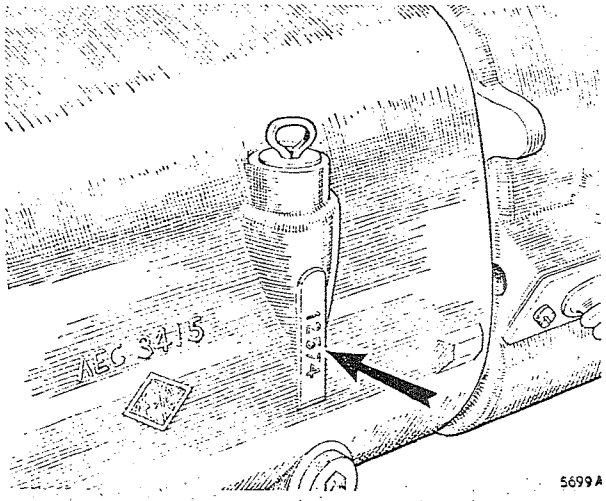

The **Gearbox Number** is stamped on the right-hand side of the gearbox below the oil level indicator

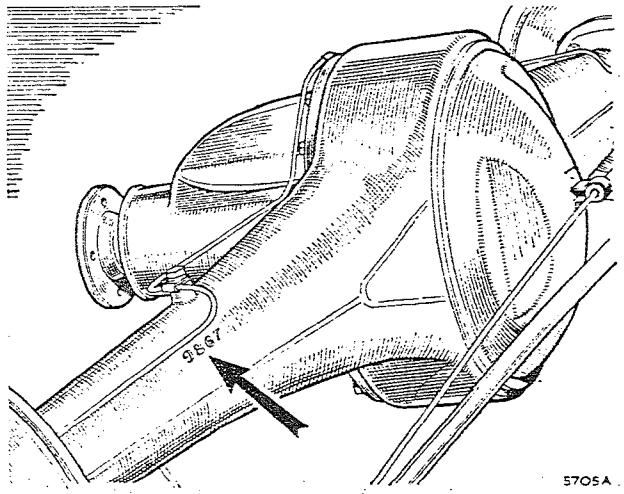

The **Rear Axle Number** is stamped on the rear left-hand side of the axle

EXPLANATORY

- It will be noted that the items comprising an assembly (or sub-assembly) are offset for easy reference.

Example

12	**Gear assembly—idler**	**2A6198**
13	**Body**	**2A6199**
14	Seal	2A6201
15	Washer for seal	2A6186
16	Shaft	2A6187

- Where a modification to a part has taken place, or a new part issued replacing an original part, this is indicated by the inclusion of the new part number in the Modifications column.

- Abbreviations used:

A	**Ambulance**	**U**	**Pick-up**	**OD**	**Outside diameter**
C	**Chassis**	**V**	**Van**	**ID**	**Inside diameter**
D	**Coupe**	**W**	**Dual-purpose (wood framing)**	**A/R**	**As required**
E	**G.P.O. Engineers**	**Ws**	**Dual-purpose (all-metal)**	**Com.**	**Commenced**
G	**G.P.O. Mail**	**X**	**Taxi**	**Fin.**	**Finished**
H	**Hearse**	**UK**	**Gt. Britain and Northern Ireland**	**No.**	**Number**
J	**Convertible**	**Not UK**	**Not Gt. Britain and Northern Ireland**	**NSP**	**Non-serviceable part**
K	**Truck**	**RHD**	**Right-hand drive**	**(B)**	**Body number**
L	**Hire Car**	**LHD**	**Left-hand drive**	**(C)**	**Car number**
M	**Limousine**	**RH**	**Right-hand**	**(D)**	**De-luxe**
N	**2-seater Tourer**	**LH**	**Left-hand**	**(E)**	**Engine number**
P	**Hard Top**	**HC**	**High compression**	**(G)**	**Gearbox number**
Q	**Chassisd an Cab**	**LC**	**Low compression**	**(S)**	**Super de-luxe**
R	**Chassis and Scuttle**	**RHT**	**Right-hand thread**	**(CB)**	**Cab number**
S	**4-door Saloon**	**LHT**	**Left-hand thread**	**(OD)**	**Overdrive number**
2S	**2-door Saloon**	**O/S**	**Oversize**	**(RA)**	**Rear axle number**
T	**4-seater Tourer**	**U/S**	**Undersize**		

IMPORTANT TO OWNERS

B.M.C. SERVICE PARTS

All Authorized B.M.C. Distributors and Dealers are under contract to supply only genuine B.M.C. Parts.

Look for this sign or label



Replacement parts that are not of genuine B.M.C. manufacture cannot be relied upon to be of B.M.C. specification, material, and workmanship, and therefore B.M.C. cannot be expected to extend their Warranty to vehicles which have been fitted with parts not of their manufacture.

A comprehensive range of EXCHANGE UNITS is available. Ask your Distributor or Dealer for full details.

In order to ensure prompt and correct execution of your orders it is essential to:

STATE THE CAR, BODY, ENGINE NUMBERS, ETC., COMPLETE WITH PREFIXES AND SUFFIXES.

GIVE THE PART NUMBER AND DESCRIPTION (PREFIX LETTERS TO PART NUMBERS MUST ALWAYS BE QUOTED).

INDEX TO SUB-SECTIONS PAGES AND ILLUSTRATIONS

Description	*Page*	*Plate*
Engine cylinder block assembly	A.1–A.2	A
Connecting rods—bearings—crankshaft—camshaft—engine mounting plates—flywheel—tappets and push rods	A.3–A.6	AA
Cylinder head—valves—guides—springs—rockers	A.7–A.8	AB
Oil sump—oil pump	A.9–A.10	AC
Oil filter	A.11–A.12	AD
Water pump—pulley—fan blade—fan belt	A.13–A.15	AE
Distributor and dynamo mountings	A.14	AF
Engine service kits	A.16–A.17	—
Inlet and exhaust manifold (twin carburetters)	A.18–A.19	AG
Inlet and exhaust manifold (triple carburetters)	A.20–A.21	AH
Engine mountings	A.22	AJ
Exhaust system	A.23	AK
Engine controls	A.26–A.27	AL
Distributor—tachometer drive—h.t. cables—vacuum control—ignition coil	B.1–B.3	B
Cooling system	C.1	C
Fuel tank—fuel pipes—overflow—pipes	D.1–D.2	D
Fuel pump	D.3–D.5	DA
Carburetter	D.6–D.9	DB
Carburetter	D.10–D.12	DC
Carburetter	D.13–D.15	DD
Carburetter controls	D.16–D.17	DE
Air cleaner—heat shield	D.18–D.19	DF
Clutch components	E.1	E
Clutch pedal and linkage	E.2–E.3	EA
Gearbox	F.1–F.5	F
Gearbox with centre gear change	F.6–F.9	FA
Gearbox with overdrive	F.10–F.13	FB
Gearbox with centre gear change and overdrive	F.14–F.17	FC
Overdrive unit	F.18–F.20	FD
Sunwheel—planet carrier and annulus	F.21–F.22	FE
Propeller shaft	G.1	G
Rear axle and suspension	H.1–H.2	H
Rear brakes	H.3–H.4	HA
Rear spring—tie rod	H.5–H.6	HB
Steering	J.1–J.2	J
Steering idler and cross rods	J.3–J.4	JA
Adjustable steering	J.5–J.6	JB
Front axle and suspension	K.1–K.2–K.5 K.6	K
Front brakes	K.3–K.4	KA
Shock absorbers	L.1	L
Brake controls and master cylinder	M.1–M.2	M
Brake supply tank—pipes and fittings	M.3–M.4	MA
Handbrake mechanism	M.5–M.6	MB
Servo system	M.7–M.9	MC
Battery—dynamo	N.1	N
Starter	N.2	NA
Switches	N.3–N.4	NB

INDEX TO SUB-SECTIONS AND ILLUSTRATIONS

Description	Page	Plate
Headlamps	N.5–N.8	NC
Sidelamp—rear lamp and number plate lamp	N.9	ND
Side and rear lamps (Germany and Sweden)	N.10	NE
Flasher—horn and controls	N.11–N.12	NF
Windscreen	N.13	NG
Cables and connections	N.14–N.16	NH
Instruments	O.1–O.2	O
Wheels	P.1	P
Body shell—chassis frame	R.1–R.2	R
Front and rear end assembly	R.3–R.4	RA
Bonnet	R.5–R.6	RB
Wings—doors and rear quarter panel assembly	R.7–R.8	RC
Rear tonneau assembly and boot lid	R.9	RD
Gearbox covers	R.10	RE
Dash and bonnet fittings	R.11–R.12	RF
Boot lid fittings	R.13	RG
Windscreen and windscreen washer	R.14–R.15	RH
Door fittings	R.16–R.17	RJ
Windows	R.18	RK
Bonnet fittings—number plate—bumpers	R.19–R.20	RL
Seats and seat fittings	R.21–R.23	RM
Body mouldings	R.24–R.25	RN
Carpets	R.26–R.27	RO
Trim liners	R.28–R.34	RP
Hood and tonneau cover	R.35–R.37	RQ
Hard top	R.38	RR
Felt and insulations	R.39	RS
Fascia	R.40	RT
Sundries	R.41–R.42	RU
Heater and ventilating equipment	R.43–R.45	RV
Tool kit	S.1	—
Paint	S.2	—

ALPHABETICAL INDEX

A

	Page
Absorber—shock—front	K.2
Absorber—shock—rear	L.1
Adaptor—3 way (rear carburetter)	D.16
Adaptor box—speedometer drive	F.5, F.9, F.22
Adjuster—brake shoe—rear	H.3
Air cleaner	D.18
Air intake assembly—ventilator	R.43
Annulus—overdrive	F.21
Armature—dynamo	N.1
Armature—starter	N.2
Arm—distributor rotor	B.1
Arm—wiper	N.13
Ash tray	R.41
Axle assembly—swivel	K.1
Axle—rear	H.1

B

Badge (Austin-Healey)	R.13, R.24
Bar—anti-roll	K.5
Barrel lock—ignition switch	N.3
Battery fittings	N.1
Bearing—annulus	F.21
Bearing assembly—clutch release	E.1
Bearing—connecting rod	A.3
Bearing—crankshaft main	A.3
Bearing—pinion—rear axle	H.2
Belt—fan	A.15
Blade—fan	A.15
Blade—wiper	N.13
Block—cylinder	A.1
Blower assembly—heater	R.44
Body—carburetter	D.6, D.10, D.13
Body—fuel pump	D.3
Body—oil pump	A.9
Body shell	R.1
Body—water pump	A.13
Bonnet assembly	R.5
Bonnet fittings	R.11
Boot lid fittings	R.13
Box—adaptor—speedometer drive	F.5, F.9, F.22
Box and outer column—steering	J.1, J.5
Box—control	N.3
Box—fuse	N.3
Box—hood stowage	R.32, R.33
Bracket—engine mounting	A.22
Bracket—radiator support	C.1
Brake controls	M.1
Brakes—front	K.3, K.4
Brakes—rear	H.3
Breather—axle	H.1
Breather—gearbox	F.2, F.6
Bumpers—front and rear	R.20

C

Cable—boot lid control	R.13
Cable—hand brake	M.5
Cable—h.t.	B.2
Cables—harness	N.14, N.15, N.16
Cable—speedometer	O.1, O.2
Cable—tachometer	O.2
Calliper unit assembly (disc brakes)	K.3, K.4
Camshaft	A.4
Cap—fuel tank filler	D.1
Cap—radiator filler	C.1
Carburetters	D.6, D.17
Carpet (bulk material)	R.39
Carpets	R.26, R.27
Carrier assembly—differential	H.1
Carrier—luggage	R.42
Case assembly—axle	H.1
Case—gearbox	F.1, F.6, F.10, F.14
Casing—gearbox extension	F.2, F.6
Casing—overdrive unit	F.18
Casing—windscreen wiper	N.13
Chain—camshaft drive	A.4
Chamber and piston assembly—carburetter	D.6, D.10, D.13
Chamber—carburetter float	D.8, D.10, D.13
Check assembly—door	R.16
Cleaner—air	D.18
Clutch	E.1
Clutch pedal and linkage	E.2, E.3
Coil—ignition	B.3
Column—steering	J.1, J.5
Connecting rod and cap	A.3
Connection—brake pipe	M.3, M.4
Control assembly—lever—heater	R.44
Control—choke	A.27
Control—push-pull—heater and ventilator	R.43, R.44
Controls—engine	A.24, A.27
Cooling system	C.1
Cover assembly—clutch	E.1
Cover assembly—gearbox	R.10
Cover—battery	N.1
Cover—bucket seat cushion	R.21
Cover—cylinder	A.5
Cover—hood	R.35, R.37
Cover—spare wheel	R.32
Cover—squab	R.22
Cover—tonneau	R.37
Cover—valve rocker	A.8
Crankshaft	A.3
Cross-head and rack	N.13
Crown wheel and pinion	H.2
Cushion—bucket seat	R.21
Cylinder assembly—wheel	H.3
Cylinder—clutch operating	E.3
Cylinder head	A.7
Cylinder—brake master	M.1, M.7
Cylinder—clutch master	E.2

D

Damper—crankshaft	A.6
Deflector—air intake—bonnet	R.19
Diaphragm assembly—fuel pump	D.3
Differential assembly	H.1
Disc-brake	K.3
Distributor	B.1
Distributor mountings	A.14
Dog—distributor driving	A.14
Door assembly—ventilator outlet	R.43
Door fittings	R.16, R.17
Doors	R.7
Drum—brake	H.3
Dynamo	N.1
Dynamo mountings	A.14

E

Elbow—fuel pump to carburetter	D.5
Elbow—water outlet	A.8
Engine controls	A.24-A.28
Engine mountings	A.22
Engine service kits	A.16, A.17
Engine unit	A.1
Exhaust manifold	A.18, A.21
Exhaust system	A.23
Extension assembly—gearbox cover	R.10

F

Fan-dynamo	A.14
Felts and insulations	R.39
Ferrule—h.t. cable	B.2
Fillet assembly—door	R.29
Filter—oil	A.11, A.12
Flywheel	A.6
Frame—chassis	R.1
Frame—hood	R.35
Front axle and suspension	K.1
Front end assembly	R.3
Fuel system	D.1

G

Gauge—fuel	O.2
Gauge—oil pressure and radiator thermometer	O.1
Gear assembly—idler	J.3

	Page
Gear assembly—steering	J.1, J.5
Gear—camshaft	A.4
Gear—crankshaft	A.3
Gear—distributor driving	A.14
Gear—speedometer	F.5, F.9
Gear—tachometer driving	B.2
Gearbox assembly—centre change lever	F.6, F.14
Gearbox assembly—side change lever	F.1, F.10
Grille—air intake—bonnet	R.24
Grille assembly—radiator	R.24
Grommets	R.42
Guide—inlet and exhaust valve	A.7

H

Hand brake	M.5
Handle—boot lid	R.13
Handle—door	R.16
Hard top	R.38
Heater unit	R.44
Heating and ventilating equipment	R.43-R.45
H.T. cables	B.2
Hinge—bonnet	R.5
Hinge—boot lid	R.13
Hinge—door	R.7
Holder—licence	R.41
Hood	R.35, R.36
Hook assembly—bonnet	R.5
Horn and direction indicator control	N.11, N.12
Horn	N.11
Hose—air—ventilator	R.43
Hose—heater	R.45
Hose—radiator	C.1
Housing assembly—accumulator—overdrive	F.19
Housing—clutch	F.1, F.6, F.10, F.14
Housing—distributor and tachometer	A.14
Housing—mainshaft bearing	F.2, F.7, F.11, F.15
Hub assembly—front	K.2
Hub assembly—rear	H.2

I

Ignition coil	B.3
Ignition equipment	B.1
Indicator—oil level—engine	A.9
Indicator—oil level—gearbox	F.1, F.6, F.10, F.14
Inlet and exhaust manifold	A.18-A.20
Instruments	O.1, O.2
Insulations	R.39

J

Jet assembly—carburetter	D.7, D.10, D.13
Jet—windscreen washer	R.15
Joint—cylinder cover	A.5
Joint—engine mounting plate	A.4, A.6
Joint—inlet and exhaust manifold	A.18, A.20
Joint—manifold to head	A.18, A.20
Joint—oil pump	A.10
Joint—sump to crankcase	A.9
Joint—valve rocker cover to head	A.8
Joint—water pump to crankcase	A.13
Journal assembly—propeller shaft	G.1

K

Key—boot lid lock	R.13
Key—camshaft gear	A.4
Key—crankshaft gear	A.3
Key—crankshaft pulley	A.6
Key—dynamo pulley	N.1
Key—ignition	N.3
Kit—adjuster repair—brake	H.4
Kit—calliper unit repair	K.4
Kit—chain tensioner servicing	A.16
Kit—clutch operating cylinder repair	E.3
Kit—joint washer—engine complete overhaul	A.16
Kit—joint washer—engine decarbonising	A.16
Kit—master cylinder service (brake)	M.1, M.9
Kit—master cylinder service (clutch)	E.2
Kit—heater	R.44
Kit—swivel pin and bush repair	K.6
Kit—tool	S.1
Kit—water pump repair	A.17
Kit—wheel cylinder repair	H.4

L

Lamps—interior	N.14
Lamps—road	N.5-N.10
Layshaft	F.3, F.8, F.12, F.16
Leathercloth (bulk material)	R.39
Leaves—rear spring	H.5
Lever—accelerator relay shaft	A.25
Lever—brake pedal	M.1
Lever—carburetter throttle	D.8, D.14, D.16
Lever—change speed	F.5, F.9, F.13, F.17
Lever—clutch pedal	E.2
Lever—handbrake balance	M.5
Lever—pedal shaft—accelerator	A.24
Lever—steering	J.2, J.3, K.1
Lever—throttle relay shaft	A.26
Lid—boot	R.9
Lighter—cigar	R.42
Light—flasher indicator warning	N.11
Liner—boot rear quarter	R.34
Liner—camshaft	A.1
Liner—cylinder block	A.14
Liner—door	R.28, R.29
Liner—rear quarter cockpit	R.31
Liner—rear wheelarch	R.31
Liner—scuttle	R.30
Link—dynamo adjusting	A.14
Link—front suspension	K.1
Lock—boot	R.9
Lock—door	R.7

M

Mainshaft	F.2, F.7, F.11, F.15
Manifold—inlet and exhaust	A.18-A.20
Mask assembly—demister	R.42
Mirror—driving	R.41
Motif "3000"	R.13, R.24
Motor—windscreen—wiper	N.13
Moulding—instrument panel	R.40
Moulding—radiator grille	R.24
Moulding—body	R.24, R.25
Moulding—cockpit	R.25
Mounting—exhaust system	A.23

N

Nameplate—boot lid	R.13
Needle—carburetter	D.7, D.10, D.13
Number-plates	R.19
Nut—starting	A.6

O

Oil thrower—crankshaft	A.6
Overdrive unit assembly	F.18
Over-riders	R.20

P

Pad—pedal (brake)	M.1
Pad—pedal (clutch)	E.2
Paint	S.2
Panel—battery access	R.33
Panel—fascia	R.40
Panel—front apron	R.12
Panel—fuel pipe cover	R.34
Panel—rear quarter	R.8
Pedal—accelerator	A.24
Pin—bonnet catch striker	R.11
Pin—gudgeon	A.2
Pinion—speedometer	F.5, F.9, F.22
Pinion tachometer	B.2

	Page
Pipe—3 way carburetter adaptor to manifold	D.16
Pipe assembly—exhaust	A.23
Pipe—breather—engine	A.14
Pipe—carburetter overflow	D.2, D.9, D.11
Pipe—carburetter to carburetter	D.2
Pipe—heater	R.45
Pipe—ignition control	B.3
Pipe—oil gauge	O.1
Pipe—oil release valve drain	A.10
Pipe—fuel drain—manifold	A.19
Pipe—rocker oil feed	A.8
Pipe—brake	M.3, M.4, M.8, M.9
Pipe—clutch	E.3
Pipe—fuel	D.1, D.2
Pipe—tachometer drive oil feed	B.2
Piston assembly	A.2
Piston assembly—accumulator	F.19
Plate assembly—clutch driven	E.1
Plate—brake	H.3
Plate—engine mounting	A.4, A.6
Plate—front and rear number	R.19
Plate—ignition coil steady	B.3
Plate—oil filter adaptor	A.12
Plate—pressure—clutch	E.1
Plate—side window securing	R.17
Plug—sparking	A.8
Plunger—reverse selector	F.4, F.8, F.13, F.16
Propeller shaft	G.1
Prop rod—bonnet	R.5
Prop rod—boot lid	R.13
Pulley—crankshaft	A.6
Pulley—dynamo	A.14
Pulley—fan	A.13
Pump—fuel	D.3
Pump—oil	A.9
Pump—water	A.13
Push rod—brake master cylinder	M.1
Push rod—clutch master cylinder	E.2
Push rod—clutch operating cylinder	E.3
Push rod—tappet	A.6

R

Radiator	C.1
Rear axle and suspension	H.1
Rear end assembly	R.4
Reflector—rear	N.9, N.10
Relay—flasher	N.11
Relay—overdrive	N.4
Ring—compression and scraper	A.2
Ring—starter	A.6
Rocker assembly—valve	A.7
Rod—connecting carburetter throttle spindles	D.9, D.12
Rod—connecting carburetter jet levers	D.9
Rod—control—accelerator pedal	A.25
Rod—steering	J.4
Rubber—boot lid sealing	R.13
Rubber—door sealing	R.17
Rubber—engine mounting	A.22
Rubber—engine mounting rebound	A.22

S

Seats	R.21-R.23
Servo system	M.7-M.9
Shaft—accelerator relay	A.25
Shaft—axle	H.2
Shaft—propeller	G.1
Shaft—shifter	F.4, F.8, F.13, F.16
Shaft—steering idler	J.3
Shaft—throttle relay	A.25
Shaft—valve rocker	A.7
Shield—heat—carburetter	D.19
Shoe assembly—brake—rear	H.3
Silencer assembly	A.23
Slide assembly—seat	R.22
Socket body—side window	R.17
Solenoid—carburetter thermo body	D.11
Solenoid—overdrive unit	F.19
Speedometers	O.1
Spindle—carburetter throttle	D.8, D.12, D.14
Spindle—oil pump	A.4
Spring—anti-rattle—clutch	E.1
Spring—bumper bar	R.20
Spring—pedal return	A.24, M.1
Spring—pressure plate—clutch	E.1
Spring—rear	H.5
Spring—road—coil	K.5
Spring—valve	A.7
Starter	N.2
Steering details	J.1-J.6
Strainer—oil—engine	A.10
Strap—hood stowage retaining	R.33
Strap—spare wheel securing	R.32, R.42
Striker pin assembly—bonnet catch	R.11
Strip—bonnet surround sealing	R.11
Sump—oil	A.9
Sundries	R.41, R.42
Surround—air intake—bonnet	R.24
Suspension—front	K.1-K.6
Switches—electrical	N.3, N.4
Switch—overdrive	F.11, F.14, N.4
Switch—stop light	M.3

T

Tachometer	O.2
Tank—dual supply—clutch and brakes	M.3
Tank—fuel	D.1
Tank unit—fuel gauge	D.1
Tap—water drain—cylinder block	A.1
Tap—heater control	A.14
Tap—radiator drain	C.1
Tappet	A.6
Tensioner—camshaft drive chain	A.4
Terminal—sparking plug	B.2
Thermostat	A.8
Thrower—crankshaft oil	A.6
Tie-rod—engine	A.22
Tie-rod—rear suspension	H.6
Tonneau assembly—rear	R.9
Tool kit	S.1
Tray—battery	N.1
Tray—parcel	R.28
Trimming details	R.26-R.34
Tube—filler—fuel tank	D.1
Tube—oil level indicator	A.1

U

Unit—flasher	N.11
Unit—fuel tank gauge	D.1

V

Vacuum control	B.3
Valve—inlet and exhaust	A.7
Valve—oil release	A.10
Ventilating equipment	R.43

W

Washer—crankshaft thrust	A.3
Washer—windscreen	R.15
Weight—wheel balance	P.1
Wheelbox—windscreen wiper	N.13
Wheels—road	P.1
Wheel—steering	J.1, J.5
Window—side	R.18
Windscreen	R.14
Wings	R.7

The following is a complete index of parts in this List, giving the page reference of each part number

Part Number	Page	Amdt. Number
1A1829	A.25	
1A1832	A.24	
1A1832	A.25	
1A1880	N.3	
1A2104	A.19	
1A2203	A.5	
1A2203	A.16	
1A3073	A.14	
1A3073	F.2	
1A3073	F.6	
1A4744	K.1	
1A4744	K.6	
1A4745	K.1	
1A4745	K.6	
1A4746	K.1	
1A4746	K.6	
1A4751	K.1	
1A4751	K.6	
1A4752	K.1	
1A4752	K.6	
1A4753	K.1	
1A4753	K.6	
1A4754	K.1	
1A4754	K.6	
1A4756	K.1	
1A4760	K.1	
1A4785	K.5	
1A4788	K.1	
1A9203	R.2	
1A9209	A.22	
1A9211	A.22	
1A9222	H.5	
1A9223	H.5	
1A9307	R.20	
1A9308	R.20	
2A263	A.14	
2A380	D.1	
2A504	D.1	
2A537	B.3	
2A700	A.11	
2A770	A.5	
2A778	A.13	
2A2088	D.1	
2A3254	F.5	
2A3254	F.9	
2A4144	K.2	
2A5006	H.5	
2A5304	M.9	
2A5346	M.4	
2A5393	H.5	
2A5412	S.1	
2A5419	S.1	
2A7227	M.4	
2A9013	N.10	
2A9039	O.1	
2A9039	O.2	
12A24	A.5	
12A24	A.16	
14A366	R.5	
14A3823	R.41	
14A6536	R.30	
14A6536	R.37	
14A6537	R.35	
14A6537	R.37	
14A6538	R.35	
14A6538	R.37	
14A8196	R.41	
14A8225	R.41	
14A8226	R.41	
22A75	F.4	
22A75	F.8	
22A75	F.13	
22A75	F.16	
AAA17	D.5	
AAA743	R.39	
AAA1891	N.16	
AAA2064	S.1	AAA4458
AAA5981	B.2	
ABZ0404	R.25	
ABZ0406	R.7	
ABZ0407	R.7	
ABZ0407	R.8	
ABZ0407	R.45	
ACA5216	S.1	
ACA5297	J.1	
ACA5297	J.5	
ACA5314	R.11	
ACA5432	S.1	
ACA5453	A.27	
ACB5311	A.25	
ACB5311	A.26	
ACB5521	M.8	
ACB5856	M.3	
ACB9274	K.5	
ACB9425	J.2	
ACB9427	J.2	
ACB9428	J.2	
ACC5137	A.16	
ACC5137	A.23	
ACG5147	D.5	
ACG5184	D.18	
ACH5112	A.27	
ACH5854	D.2	
ACH8508	A.26	
ACH8529	N.15	
ACH8979	O.1	
ACH9041	B.3	
ACH9042	A.27	
ADA457	R.11	
ADA461	R.11	
ADA463	R.11	
ADA464	R.11	
ADA466	R.11	
ADA467	R.11	
ADA2450	R.11	
ADA2493	R.42	
ADA2657	N.15	
ADB509	R.24	
ADB554	R.16	
ADB557	R.16	
ADB709	R.16	
ADB826	N.13	
ADB3657	R.16	
ADB4811	R.10	
ADC560	N.13	
ADE539	R.39	
ADE565	R.39	
ADG1673	R.16	
ADH456	R.11	
ADP610	A.8	
ADP610	A.18	
AEA558	F.9	
AEA558	F.17	
AEB3105	F.2	
AEB3105	F.7	
AEB3105	F.11	
AEB3105	F.15	
AEB3111	F.3	
AEB3111	F.7	
AEB3111	F.12	
AEB3111	F.15	
AEB3112	F.3	
AEB3112	F.7	
AEB3112	F.12	
AEB3112	F.15	
AEB3115	F.3	
AEB3115	F.7	
AEB3115	F.15	
AEB3124	F.2	
AEB3124	F.7	
AEB3124	F.11	
AEB3124	F.15	
AEB3130	F.4	
AEB3130	F.8	
AEB3130	F.13	
AEB3130	F.16	
AEB3162	F.5	
AEB3162	F.9	
AEB3163	F.5	
AEB3163	F.9	
AEB3202	F.5	
AEB3202	F.9	
AEB3203	F.3	
AEB3203	F.8	
AEB3203	F.12	
AEB3203	F.16	
AEB3204	F.3	
AEB3204	F.8	
AEB3204	F.12	
AEB3204	F.16	
AEB3209	F.8	
AEB3209	F.12	
AEB3209	F.16	
AEB3212	F.3	
AEB3212	F.8	
AEB3212	F.12	
AEB3212	F.16	
AEB3214	F.2	
AEB3214	F.11	
AEC27	A.7	
AEC28	A.3	
AEC76	A.15	
AEC108	A.9	
AEC108	A.16	
AEC110	A.1	
AEC128	A.6	
AEC128	A.16	
AEC135	A.7	
AEC139	A.1	
AEC143	A.8	
AEC144	A.7	

Part Number	Page	Amdt. Number
AEC150	A.6	
AEC157	A.16	
AEC158	A.8	
AEC160	A.8	
AEC162	A.8	
AEC179	A.3	
AEC180	A.3	
AEC183	A.6	
AEC191	A.4	
AEC193	A.4	
AEC202	A.5	
AEC202	A.16	
AEC203	A.9	
AEC205	A.9	
AEC205	A.16	
AEC206	A.13	
AEC214	A.13	
AEC214	A.17	
AEC216	A.13	
AEC216	A.16	
AEC216	A.17	
AEC223	A.10	
AEC224	A.10	
AEC238	A.14	
AEC242	A.14	
AEC245	A.7	
AEC247	A.4	
AEC264	A.6	
AEC265	A.6	
AEC266	A.8	
AEC268	A.3	
AEC278	A.3	
AEC279	A.3	
AEC283	A.10	
AEC284	A.10	
AEC288	A.16	
AEC290	A.6	
AEC293	A.14	
AEC313	A.5	
AEC313	A.16	
AEC315	A.10	
AEC315	A.16	
AEC328	A.3	
AEC332	A.3	
AEC333	A.3	
AEC336	A.4	
AEC337	A.4	
AEC337	A.16	
AEC339	A.4	
AEC339	A.16	
AEC340	A.4	
AEC341	A.1	
AEC343	A.1	
AEC345	A.5	
AEC346	A.8	
AEC348	A.5	
AEC349	A.5	
AEC350	A.18	
AEC350	A.20	
AEC357	A.16	
AEC368	D.19	
AEC375	D.18	
AEC383	A.13	
AEC384	A.13	
AEC384	A.17	
AEC385	F.1	
AEC385	F.6	
AEC398	A.1	
AEC405	A.9	
AEC406	A.9	
AEC407	A.9	
AEC416	B.3	
AEC440	D.18	
AEC441	D.18	
AEC442	D.18	
AEC448	A.6	
AEC449	A.19	
AEC450	A.19	
AEC461	A.5	
AEC463	A.7	
AEC474	A.6	
AEC478	A.6	
AEC479	A.18	
AEC479	A.20	
AEC479	F.1	
AEC479	F.6	
AEC479	F.10	
AEC479	F.14	
AEC482	A.4	
AEC488	A.8	
AEC490	A.8	
AEC491	A.7	
AEC496	B.3	
AEC604	A.1	
AEC609	A.13	
AEC616	A.7	
AEC621	A.5	
AEC667	A.9	
AEC671	A.9	
AEC672	A.1	
AEC675	A.12	
AEC678	A.14	
AEC679	B.2	
AEC680	B.2	
AEC681	A.14	
AEC682	B.2	
AEC685	A.14	
AEC686	A.14	
AEC687	B.2	
AEC689	A.5	
AEC692	A.9	
AEC695	A.9	
AEC698	A.10	
AEC698	A.16	
AEC699	A.9	
AEC699	A.16	
AEC701	B.2	
AEC702	D.18	
AEC703	A.14	
AEC724	A.7	
AEC731	A.16	
AEC731	A.18	
AEC731	A.20	
AEC736	A.7	
AEC744	A.3	
AEC745	A.3	
AEC746	A.3	
AEC747	A.3	
AEC748	A.3	
AEC749	A.3	
AEC787	A.5	
AEC796	B.2	
AEC810	A.4	
AEC828	A.4	
AEC829	A.4	
AEC844	D.2	
AEC853	A.1	
AEC863	A.10	
AEC864	A.10	
AEC872	A.1	
AEC874	A.16	
AEC875	A.8	
AEC875	A.16	
AEC876	A.1	
AEC876	A.7	
AEC879	A.14	
AEC882	A.3	
AEC885	A.6	
AEC888	A.9	
AEC888	A.16	
AEC889	A.22	
AEC890	A.22	
AEC891	A.13	
AEC897	A.11	
AEC905	A.2	
AEC906	A.2	
AEC907	A.2	
AEC908	A.2	
AEC910	A.14	
AEC914	A.7	
AEC915	A.7	
AEC925	A.9	
AEC928	A.9	
AEC929	A.9	
AEC930	A.9	
AEC932	A.15	
AEC950	A.19	
AEC961	D.16	
AEC962	A.7	
AEC965	A.18	
AEC970	D.16	
AEC973	D.16	
AEC975	D.16	
AEC976	D.16	
AEC977	D.16	
AEC981	D.2	
AEC982	D.2	
AEC996	A.7	
AEC997	A.20	
AEC999	D.16	
AEC1001	A.17	
AEC1011	A.5	
AEC1024	A.15	
AEC1025	A.15	
AEC1097	A.7	
AEC1230	D.2	
AEC1332	A.8	
AEC1332	A.16	
AEC1341	A.9	
AEC1347	A.1	
AEC1352	A.1	
AEC1353	A.1	
AEC1354	A.7	
AEC1355	A.7	
AEC1356	A.13	
AEC1357	D.19	
AEC1376	A.18	
AEC1377	A.18	
AEC1378	A.18	
AEC1489	A.1	
AEC1490	A.1	
AEC1491	A.7	
AEC1492	A.20	
AEC1493	A.20	
AEC1494	A.20	
AEC1495	A.20	
AEC1496	A.20	
AEC1510	A.20	
AEC1511	A.20	
AEC1512	A.20	
AEC2006	A.1	
AEC2007	A.7	
AEC2008	A.7	
AEC2009	A.18	
AEC2014	A.18	
AEC2015	A.6	
AEC2018	A.13	
AEC2020	A.13	
AEC2021	A.13	
AEC2026	A.3	
AEC2029	A.4	
AEC2030	A.4	
AEC2032	A.4	
AEC2033	A.4	
AEC2033	A.16	
AEC2037	A.6	
AEC2040	A.3	
AEC2041	A.8	

Part Number	Page	Amdt. Number
AEC2044	A.8	
AEC2053	D.16	
AEC2055	D.16	
AEC2056	A.16	
AEC2056	A.21	
AEC2057	D.17	
AEC2058	D.17	
AEC2059	D.16	
AEC2062	D.16	
AEC2065	D.19	
AEC2068	D.16	
AEC2070	D.17	
AEC2071	D.2	
AEC2072	D.2	
AEC2073	D.17	
AEC2074	D.12	
AEC2075	D.17	
AEC2076	D.16	
AEC2080	D.16	
AEC2083	D.19	
AEC2085	B.3	
AEC2091	D.16	
AEC2097	A.3	
AEC2115	D.16	
AEC2118	D.16	
AEC2119	D.16	
AEC2120	D.16	
AEC2122	M.8	
AEC2126	D.19	
AEC2127	D.17	
AEC2128	D.19	
AEC2133	D.2	
AEC2134	D.2	
AEC2135	D.2	
AEC2147	A.21	
AEC2178	A.8	
AEC2179	A.8	
AEC2181	A.8	
AEC2183	A.16	
AEC2183	D.19	
AEC3072	F.2	
AEC3072	F.7	
AEC3072	F.11	
AEC3072	F.15	
AEC3088	F.1	
AEC3088	F.6	
AEC3088	F.10	
AEC3088	F.14	
AEC3102	F.1	
AEC3102	F.6	
AEC3102	F.10	
AEC3102	F.14	
AEC3104	F.1	
AEC3104	F.6	
AEC3104	F.10	
AEC3104	F.14	
AEC3105	F.1	
AEC3105	F.6	
AEC3105	F.10	
AEC3105	F.14	
AEC3106	F.1	
AEC3106	F.6	
AEC3106	F.10	
AEC3106	F.14	
AEC3109	F.1	
AEC3109	F.10	
AEC3112	F.2	
AEC3112	F.7	
AEC3112	F.11	
AEC3112	F.15	
AEC3115	F.4	
AEC3115	F.8	
AEC3115	F.12	
AEC3115	F.16	
AEC3116	F.4	
AEC3116	F.8	
AEC3116	F.12	
AEC3116	F.16	
AEC3119	F.3	
AEC3119	F.8	
AEC3119	F.12	
AEC3119	F.15	
AEC3121	F.3	
AEC3121	F.8	
AEC3121	F.12	
AEC3121	F.15	
AEC3142	F.2	
AEC3142	F.18	
AEC3168	F.1	
AEC3168	F.6	
AEC3168	F.10	
AEC3168	F.14	
AEC3176	F.1	
AEC3176	F.10	
AEC3178	F.2	
AEC3178	F.7	
AEC3178	F.11	
AEC3178	F.15	
AEC3180	F.3	
AEC3180	F.7	
AEC3180	F.11	
AEC3180	F.12	
AEC3180	F.15	
AEC3181	F.3	
AEC3181	F.7	
AEC3181	F.11	
AEC3181	F.12	
AEC3181	F.15	
AEC3182	F.3	
AEC3182	F.7	
AEC3182	F.11	
AEC3182	F.12	
AEC3182	F.15	
AEC3183	F.2	
AEC3183	F.7	
AEC3183	F.11	
AEC3183	F.14	
AEC3184	F.2	
AEC3184	F.7	
AEC3184	F.11	
AEC3184	F.14	
AEC3185	F.2	
AEC3185	F.7	
AEC3185	F.11	
AEC3185	F.15	
AEC3186	F.2	
AEC3186	F.7	
AEC3186	F.11	
AEC3186	F.15	
AEC3187	F.4	
AEC3187	F.8	
AEC3187	F.13	
AEC3187	F.16	
AEC3188	F.4	
AEC3188	F.8	
AEC3188	F.13	
AEC3188	F.16	
AEC3189	F.4	
AEC3189	F.8	
AEC3189	F.13	
AEC3189	F.16	
AEC3193	F.3	
AEC3193	F.7	
AEC3193	F.11	
AEC3193	F.15	
AEC3195	F.1	
AEC3195	F.10	
AEC3198	F.5	
AEC3198	F.9	
AEC3207	F.6	
AEC3207	F.10	
AEC3207	F.14	
AEC3208	F.2	
AEC3208	F.3	
AEC3208	F.7	
AEC3208	F.11	
AEC3208	F.12	
AEC3208	F.15	
AEC3209	F.4	
AEC3211	F.3	
AEC3211	F.12	
AEC3221	F.1	
AEC3221	F.6	
AEC3221	F.10	
AEC3221	F.14	
AEC3224	F.5	
AEC3224	F.22	
AEC3298	F.1	
AEC3298	F.6	
AEC3298	F.10	
AEC3298	F.14	
AEC3322	F.4	
AEC3322	F.13	
AEC3323	F.1	
AEC3323	F.10	
AEC3324	F.1	
AEC3324	F.6	
AEC3324	F.10	
AEC3324	F.14	
AEC3340	F.3	
AEC3340	F.8	
AEC3340	F.12	
AEC3340	F.15	
AEC3342	F.4	
AEC3342	F.8	
AEC3342	F.13	
AEC3342	F.16	
AEC3343	F.4	
AEC3343	F.8	
AEC3343	F.13	
AEC3350	F.4	
AEC3350	F.8	
AEC3350	F.12	
AEC3350	F.16	
AEC3355	F.3	
AEC3355	F.11	
AEC3357	F.3	
AEC3357	F.12	
AEC3358	F.2	
AEC3358	F.11	
AEC3359	F.3	
AEC3359	F.12	
AEC3362	F.11	
AEC3363	F.18	
AEC3393	F.3	
AEC3393	F.8	
AEC3393	F.12	
AEC3393	F.16	
AEC3417	F.2	
AEC3417	F.7	
AEC3418	F.5	
AEC3418	F.9	
AEC3419	F.5	
AEC3419	F.9	
AEC3455	F.1	
AEC3455	F.10	
AEC3461	F.6	
AEC3461	F.14	
AEC3468	F.3	
AEC3468	F.7	
AEC3468	F.11	
AEC3468	F.15	
AEC3469	F.3	
AEC3469	F.7	
AEC3469	F.12	
AEC3469	F.15	
AEC3471	F.3	
AEC3471	F.12	

Part Number	Page	Amdt. Number
AEC3472	F.2	
AEC3472	F.7	
AEC3472	F.11	
AEC3472	F.14	
AEC3480	F.5	
AEC3480	F.13	
AEC3481	F.2	
AEC3481	F.7	
AEC3481	F.11	
AEC3481	F.15	
AEC3482	F.3	
AEC3482	F.7	
AEC3482	F.12	
AEC3482	F.15	
AEC3484	F.11	
AEC3484	F.15	
AEC3485	F.11	
AEC3485	F.15	
AEC3486	F.11	
AEC3486	F.15	
AEC3487	F.9	
AEC3487	F.22	
AEC3492	F.6	
AEC3492	F.14	
AEC3504	F.4	
AEC3504	F.13	
AEC3507	F.3	
AEC3507	F.12	
AEC3513	F.1	
AEC3513	F.10	
AEC3520	F.5	
AEC3520	F.9	
AEC3520	F.13	
AEC3520	F.17	
AEC3523	F.1	
AEC3524	F.10	
AEC3525	F.3	
AEC3525	F.12	
AEC3533	F.2	
AEC3533	F.7	
AEC3533	F.11	
AEC3533	F.15	
AEC3534	F.1	
AEC3534	F.10	
AEC3539	F.3	
AEC3539	F.12	
AEC3540	F.3	
AEC3540	F.12	
AEC3547	F.6	
AEC3547	F.14	
AEC3554	F.14	
AEC3555	F.6	
AEC3557	F.8	
AEC3557	F.16	
AEC3559	F.6	
AEC3559	F.14	
AEC3565	F.8	
AEC3565	F.12	
AEC3565	F.15	
AEC3566	F.3	
AEC3566	F.7	
AEC3566	F.12	
AEC3566	F.15	
AEC3601	F.6	
AEC3601	F.14	
AEC3605	F.7	
AEC3605	F.18	
AEC3616	F.3	
AEC3616	F.12	
AEC3620	F.6	
AEC3623	F.18	
AEC3624	F.8	
AEC3624	F.16	
AEC3625	F.8	
AEC3625	F.16	
AEC3626	F.16	
AEC3626	F.8	
AEC3636	F.9	
AEC3636	F.16	
AEC3649	F.3	
AEC3649	F.8	
AEC3649	F.12	
AEC3649	F.16	
AEC3654	F.8	
AEC3654	F.16	
AEC3656	F.3	
AEC3656	F.8	
AEC3656	F.16	
AEC3657	F.6	
AEC3657	F.14	
AEC3658	F.9	
AEC3658	F.17	
AEC3659	F.9	
AEC3659	F.17	
AEC3661	F.18	
AEC3671	F.9	
AEC3671	F.17	
AEC3681	F.4	
AEC3681	F.8	
AEC3681	F.12	
AEC3681	F.16	
AEC3683	F.6	
AEC3683	F.14	
AEC3689	F.9	
AEC3689	F.16	
AEC013510	A.7	
AEC024510	A.7	
AEC026410	A.6	
AEC026420	A.6	
AEC090610	A.2	
AEC090620	A.2	
AEC090630	A.2	
AEC090640	A.2	
AEC090710	A.2	
AEC090720	A.2	
AEC090730	A.2	
AEC090740	A.2	
AEC090810	A.2	
AEC090820	A.2	
AEC090830	A.2	
AEC090840	A.2	
AEC091410	A.7	
AEC133703	A.2	
AEC133706	A.2	
AEC133713	A.2	
AEC133716	A.2	
AEC133723	A.2	
AEC133726	A.2	
AEC133733	A.2	
AEC133736	A.2	
AEC133743	A.2	
AEC133746	A.2	
AEC348403	F.11	
AEC348403	F.15	
AEC348406	F.11	
AEC348406	F.15	
AED102	D.16	
AED159	A.7	
AED161	A.8	
AED162	A.8	
AED308	A.16	
AED308	D.19	
AEG3113	F.9	
AEG3113	F.17	
AEG3122	F.9	
AEG3122	F.17	
AEG3123	F.9	
AEG3123	F.17	
AEG3124	F.9	
AEG3124	F.17	
AEH592	A.1	
AEJ16	A1	
AEJ17	E.1	
AEJ20	F.11	
AEJ20	F.14	
AEJ22	N.1	
AEJ25	B.1	
AEJ30	E.1	
AEJ42	F.19	
AEJ51	F.6	
AEJ51	F.14	
AEJ52	A.8	
AEK113	A.7	
AEK113	A.16	
AHA5506	S.1	
AHA5689	A23	
AHA5690	A23.	
AHB5366	D.2	
AHB5367	A.25	
AHB5370	A.25	
AHB5370	A.26	
AHB5372	A.26	
AHB5378	D.5	
AHB5391	R.3	
AHB5392	R.4	
AHB5393	R.4	
AHB5394	R.4	
AHB5395	R.4	
AHB5396	R.4	
AHB5397	A.19	
AHB5397	A.21	
AHB5398	R.17	
AHB5399	D.1	
AHB5401	C.1	
AHB5402	C.1	
AHB5406	R.40	
AHB5407	R.36	
AHB5410	R.26	
AHB5411	R.26	
AHB5412	R.26	
AHB5413	R.26	
AHB5414	R.26	
AHB5415	R.26	
AHB5416	R.26	
AHB5417	R.26	
AHB5418	R.26	
AHB5419	R.26	
AHB5420	R.26	
AHB5421	R.26	
AHB5434	R.28	
AHB5435	R.28	
AHB5436	R.28	
AHB5437	R.28	
AHB5438	R.28	
AHB5439	R.28	
AHB5440	R.28	
AHB5441	R.28	
AHB5442	R.28	
AHB5443	R.28	
AHB5444	R.28	
AHB5445	R.28	
AHB5446	R.28	
AHB5447	R.28	
AHB5448	R.28	
AHB5449	R.28	
AHB5450	R.29	
AHB5451	R.29	
AHB5452	R.29	
AHB5453	R.29	
AHB5454	R.29	

Part Number	Page	Amdt. Number
AHB5455	R.29	
AHB5456	R.29	
AHB5457	R.29	
AHB5458	R.29	
AHB5459	R.29	
AHB5460	R.29	
AHB5461	R.29	
AHB5462	R.29	
AHB5463	R.29	
AHB5464	R.29	
AHB5465	R.29	
AHB5466	R.29	
AHB5467	R.29	
AHB5468	R.29	
AHB5469	R.29	
AHB5470	R.29	
AHB5471	R.29	
AHB5472	R.29	
AHB5473	R.29	
AHB5474	R.29	
AHB5475	R.29	
AHB5476	R.29	
AHB5477	R.29	
AHB5478	R.29	
AHB5479	R.29	
AHB5480	R.29	
AHB5481	R.29	
AHB5483	R.30	
AHB5486	R.30	
AHB5487	R.30	
AHB5488	R.30	
AHB5489	R.30	
AHB5490	R.31	
AHB5491	R.31	
AHB5492	R.31	
AHB5493	R.31	
AHB5494	R.31	
AHB5495	R.31	
AHB5496	R.31	
AHB5497	R.31	
AHB5498	R.31	
AHB5499	R.31	
AHB5500	R.31	
AHB5501	R.31	
AHB5502	R.31	
AHB5503	R.31	
AHB5504	R.31	
AHB5505	R.31	
AHB5506	R.32	
AHB5507	R.32	
AHB5508	R.32	
AHB5509	R.32	
AHB5510	R.32	
AHB5511	R.32	
AHB5512	R.32	
AHB5513	R.32	
AHB5514	R.32	
AHB5515	R.32	
AHB5516	R.32	
AHB5517	R.32	
AHB5518	R.32	
AHB5519	R.32	
AHB5520	R.32	
AHB5521	R.32	
AHB5522	R.33	
AHB5523	R.33	
AHB5524	R.33	
AHB5525	R.33	
AHB5526	R.33	
AHB5527	R.33	
AHB5528	R.33	
AHB5529	R.33	
AHB5530	R.33	
AHB5531	R.33	
AHB5532	R.33	
AHB5533	R.33	
AHB5534	R.33	
AHB5535	R.33	
AHB5536	R.33	
AHB5538	R.21	
AHB5539	R.21	
AHB5540	R.21	
AHB5541	R.21	
AHB5542	R.21	
AHB5543	R.21	
AHB5544	R.21	
AHB5545	R.21	
AHB5546	R.21	
AHB5547	R.21	
AHB5548	R.21	
AHB5549	R.21	
AHB5550	R.21	
AHB5551	R.21	
AHB5552	R.21	
AHB5553	R.21	
AHB5554	R.21	
AHB5555	R.21	
AHB5556	R.21	
AHB5557	R.21	
AHB5558	R.21	
AHB5559	R.21	
AHB5560	R.21	
AHB5561	R.21	
AHB5562	R.21	
AHB5563	R.21	
AHB5564	R.21	
AHB5565	R.21	
AHB5566	R.21	
AHB5567	R.21	
AHB5568	R.21	
AHB5569	R.21	
AHB5570	R.21	
AHB5571	R.21	
AHB5572	R.21	
AHB5573	R.22	
AHB5574	R.22	
AHB5575	R.22	
AHB5576	R.22	
AHB5577	R.22	
AHB5578	R.22	
AHB5579	R.22	
AHB5580	R.22	
AHB5581	R.22	
AHB5582	R.22	
AHB5583	R.22	
AHB5584	R.22	
AHB5585	R.22	
AHB5586	R.22	
AHB5594	R.37	
AHB5595	R.37	
AHB5596	R.37	
AHB5597	R.37	
AHB5598	R.35	
AHB5599	R.35	
AHB5600	R.35	
AHB5601	R.35	
AHB5602	R.38	
AHB5603	R.38	
AHB5604	R.38	
AHB5606	R.38	
AHB5748	R.5	
AHB5799	R.35	
AHB5800	R.35	
AHB5866	D.1	
AHB5883	R.14	
AHB5895	R.26	
AHB5896	R.26	
AHB5897	R.26	
AHB5898	R.26	
AHB5899	R.26	
AHB5900	R.26	
AHB5943	R.36	
AHB5944	R.35	
AHB5945	R.15	
AHB5947	R.27	
AHB5948	R.27	
AHB5949	R.27	
AHB5950	R.27	
AHB6000	J1	
AHB8285	R.3	
AHB8287	N.15	
AHB8288	N.16	
AHB8289	N.16	
AHB8290	N.11	
AHB8293	R.27	
AHB8294	R.27	
AHB8295	R.27	
AHB8296	R.27	
AHB8297	R.27	
AHB8302	R.33	
AHB8303	R.33	
AHB8304	R.33	
AHB8305	R.33	
AHB8307	R.17	
AHB8308	R.17	
AHB8309	R.17	
AHB8312	J.5	
AHB8314	J.5	
AHB8315	D.1	
AHB8318	N.15	
AHB8334	D.1	
AHB8347	R.23	
AHB8348	R.23	
AHB8354	R.35	
AHB8377	R.10	
AHB8381	R.10	
AHB8382	R.14	
AHB8384	R.25	
AHB8385	N.1	
AHB8388	J.1	
AHB8389	J.1	
AHB8395	R.37	
AHB8397	R.23	
AHB8398	R.23	
AHB8399	R.23	
AHB8400	R.23	
AHB8429	R.26	
AHB8430	R.26	
AHB8431	R.26	
AHB8432	R.26	
AHB8439	R.37	
AHB8440	R.27	
AHB8441	R.72	
AHB8442	R.27	
AHB8447	R.31	
AHB8448	R.31	
AHB8449	R.31	
AHB8450	R.31	
AHB8451	R.31	
AHB8457	R.31	
AHB8458	R.31	
AHB8459	R.31	
AHB8460	R.31	
AHB8461	R.31	
AHB8487	R.27	
AHB8488	R.27	
AHB8489	R.27	
AHB8490	R.27	
AHB8491	R.27	
AHB8492	R.27	
AHB8493	R.27	
AHB8494	R.27	
AHB8495	R.27	
AHB8505	R.4	
AHB8514	R.38	
AHB8515	R.38	
AHB8516	R.38	
AHB8517	R.38	

Part Number	Page	Amdt. Number
AHB8518	R.35	
AHB8519	R.35	
AHB8548	R.22	
AHB8549	R.22	
AHB8550	R.22	
AHB8551	R.22	
AHB8610	R.30	
AHB8611	R.30	
AHB8612	R.30	
AHB8613	R.30	
AHB8622	R.37	
AHB8623	R.37	
AHB8641	R.34	
AHB8653	R.34	
AHB8665	R.34	
AHB8692	R.34	
AHB8693	R.34	
AHB8696	R.34	
AHB8697	R.34	
AHB8701	R.37	
AHB8702	R.37	
AHB8707	N.14	
AHB8708	N.16	
AHB8741	R.1	
AHB8742	R.1	
AHB8744	R.1	
AHB8745	R.1	
AHB8748	A.25	
AHB8749	R.38	
AHB8750	R.38	
AHB8751	R.35	
AHB8752	R.35	
AHB8753	R.35	
AHB8781	R.1	
AHB8782	R.39	
AHB8783	R.39	
AHB8784	R.1	
AHB8787	R.35	
AHB8801	R.35	
AHB8802	R.35	
AHB8803	R.35	
AHB8827	S.1	
AHB8834	R.35	
AHB8835	R.35	
AHB8836	R.35	
AHB8837	R.34	
AHB8844	R.34	
AHB8854	R.30	
AHB8855	R.30	
AHB8856	R.30	
AHB8859	R.28	
AHB8860	R.28	
AHB8861	R.13	
AHB8861	R.24	
AHB8862	R.22	
AHB8863	R.22	
AHB8864	R.22	
AHB8871	R.28	
AHB8872	R.28	
AHB8874	R.23	
AHB8875	R.23	
AHB8876	R.23	
AHB8877	R.32	
AHB8878	R.32	
AHB8879	R.33	
AHB8880	R.33	
AHB8883	J.4	
AHB8885	N.14	
AHB8886	R.30	
AHB8887	R.30	
AHB8888	R.30	
AHB8899	R.32	
AHB8900	R.32	
AHB8901	R.32	
AHB8902	R.32	
AHB8903	R.32	
AHB8904	R.32	
AHB8939	E.3	
AHB8940	R.15	
AHB8944	A.26	
AHB8946	C.1	
AHB8950	A.24	
AHB8950	A.25	
AHB8951	N.1	
AHB8952	K.5	
AHB8953	R.3	
AHB8954	R.3	
AHB8955	R.4	
AHB8956	R.4	
AHB8970	C.1	
AHB8971	R.45	
AHB8973	R.39	
AHB8974	R.39	
AHB8975	A.23	
AHB8976	A.23	
AHB9878	R.19	
AHB8983	S.1	
AHB8984	N.10	
AHB8985	N.10	
AHB8991	R.13	
AHB8993	A.23	
AHB8996	A.23	
AHB8999	R.24	
AHB9000	R.24	
AHB9001	R.24	
AHB9005	R.24	
AHB9008	R.2	
AHB9009	R.2	
AHB9011	R.24	
AHB9014	R.24	
AHB9019	R.25	
AHB9021	A.25	
AHB9023	D.18	
AHB9024	D.18	
AHB9037	A.24	
AHB9041	A.26	
AHB9042	A.27	
AHB9043	A.27	
AHB9044	A.27	
AHB9045	A.27	
AHB9046	A.27	
AHB9048	R.45	
AHB9050	A.25	
AHB9050	A.26	
AHB9053	N.4	
AHB9054	A.27	
AHB9055	A.27	
AHB9056	D.2	
AHB9056	D.18	
AHB9057	A.27	
AHB9065	R.39	
AHB9067	M.3	
AHB9074	R.1	
AHB9076	R.4	
AHB9081	R.1	
AHB9082	R.4	
AHB9092	R.19	
AHB9093	R.19	
AHB9095	R.11	
AHB9109	M.7	
AHB9110	M.8	2714 717 Feb/259
AHB9111	M.9	
AHB9112	M.8	
AHB9113	M.8	
AHB9117	M.8	
AHB9118	M.8	
AHB9119	M.8	
AHB9120	M.8	
AHB9128	R.3	
AHB9142	N.14	
AHB9143	N.15	
AHB9144	N.15	
AHB9145	N.15	
AHB9162	J.1	
AHB9164	J.5	
AHB9169	R.3	
AHB9170	R.3	
AHB9171	R.3	
AHB9176	R.10	
AHB9177	R.10	
AHB9178	R.10	
AHB9179	R.10	
AHB9182	M.1	
AHB9183	E.2	
AHB9185	M.1	
AHB9188	A.24	
AHB9190	A.24	
AHB9192	R.10	
AHB9193	A.24	
AHB9194	A.24	
AHB9195	A.24	
AHB9204	A.25	
AHB9205	A.25	
AHB9209	R.24	
AHB9209	R.25	
AHB9210	R.39	
AHB9211	R.5	
AHB9212	R.5	
AHB9215	R.9	
AHB9216	R.9	
AHB9245	R.11	
AHB9249	R.45	
AHB9268	R.10	
AHB9269	R.39	
AHB9270	R.39	
AHB9271	R.39	
AHB9272	R.39	
AHB9273	R.39	
AHB9274	R.39	
AHB9275	R.39	
AHB9276	R.39	
AHB9278	R.26	
AHB9279	R.26	
AHB9280	R.26	
AHB9281	P.26	
AHB9286	R.26	
AHB9287	R.26	
AHB9288	R.26	
AHB9289	R.26	
AHB9294	R.26	
AHB9295	R.26	
AHB9296	R.26	
AHB9297	R.26	
AHB9302	R.26	
AHB9303	R.26	
AHB9304	R.26	
AHB9305	R.26	
AHB9310	R.26	
AHB9311	R.26	
AHB9312	R.26	
AHB9313	R.26	
AHB9318	R.27	
AHB9319	R.27	
AHB9320	R.27	
AHB9321	R.27	
AHB9326	R.26	
AHB9227	R.26	
AHB9228	R.26	
AHB9329	R.26	
AHB9330	R.26	
AHB9331	R.26	
AHB9332	R.26	
AHB9333	R.26	
AHB9334	R.27	
AHB9335	R.27	
AHB9336	R.27	
AHB9337	R.27	
AHB9338	R.27	

Part Number	Page	Amdt. Number
AHB9339	R.27	
AHB9340	R.27	
AHB9341	R.27	
AHB9342	R.37	
AHB9359	R.27	
AHB9360	R.27	
AHB9361	R.27	
AHB9362	R.27	
AHB9363	R.27	
AHB9364	R.27	
AHB9365	R.27	
AHB9366	R.27	
AHB9367	R.27	
AHB9372	R.39	
AHB9373	R.39	
AHB9378	D.5	
AHB9383	D.1	
AHB9386	D.1	
AHB9389	A.23	
AHB9392	D.1	
AHB9395	D.1	
AHB9510	R.10	
AHB9511	R.10	
AHB9512	R.10	
AHB9549	N.15	
AHB9550	N.15	
AHB9551	N.15	
AHB9552	N.15	
AHB9608	J.4	
AHB9609	J.4	
AHB9909	D.18	
AHH5297	D.2	
AHH5388	R.10	
AHH5414	N.13	
AHH5417	N.13	
AHH5714	R.43	
AHH5714	R.45	
AHH5759	R.42	
AHH5839	S.1	
AHH5986	S.1	
AHH5987	S.1	
AHH8008	P.1	
AHH8009	P.1	
AJA5006	N.12	
AJA5081	N.5	
AJA5081	N.6	
AJA5081	N.7	
AJA5081	N.8	
AJA5083	N.5	
AJC5011	A.11	
AJC5033	A.4	
AJC5095	B.1	
AJC5116	N.9	
AJC5159	A.3	
AJC6042	A.1	
AJC515910	A.3	
AJC515920	A.3	
AJC515930	A.3	
AJC515940	A.3	
AJD1012	R.44	
AJD1042	D.8	
AJD1042	D.12	
AJD1042	D.16	
AJD1042	D.15	
AJD1703N	N.3	
AJD3202Z	N.13	
AJD3204Z	R.44	
AJD7202	R.10	
AJD7202	R.12	
AJD7212	R.39	
AJD7282	R.19	
AJD7622	R.10	
AJD8012Z	D.8	
AJD8012Z	D.9	
AJD8012Z	D.12	
AJD8012Z	D.15	
AJD8012Z	D.16	
AJD8012Z	D.17	
AJD8014Z	D.8	
AJD8014Z	D.9	
AJD8014Z	D.12	
AJD8104Z	D.15	
AJH5079	N.13	
AJH5176	O.1	
AJH5176	O.2	
AJH5177	O.1	
AJH5177	O.2	
AJH5178	O.1	
AJH5178	O.2	
AJH5182	O.1	
AJH5182	O.2	
ALH1527	R.16	
ANK3458	N.13	
ANK3459	N.13	
ANK4646	N.3	
ANK4646	R.13	
ARH1039	C.1	
ARH1542	C.1	
ATA7043	H2.	
ATB4098	K.2	
ATB7198	H.2	
ATB7265	K.2	
ATB7285	H.2	
ATB7285	K.2	
ATB7289	M.9	
ATB7528	K.2	
ATC4257	K.2	
ATC7060	H.2	
ATC7061	H.1	
ATC7062	H.1	
ATC7071	G.1	
ATC7071	H.3	
ATC7083	H.1	
ATC7084	H.1	
ATC7085	H.2	
ATC7089	H.2	
ATC7091	H.2	
ATC7092	H.2	
ATC7093	H.2	
ATC7094	H.2	
ATC7095	H.2	
ATC7096	H.2	
ATC7097	H.2	
ATC7098	H.2	
ATC7099	H.2	
ATC7100	F.2	
ATC7100	F.7	
ATC7101	H.2	
QTC7104	H.1	
ATC7106	H.1	
ATC7107	H.1	
ATC7108	H.1	
ATC7109	H.2	
ATC7111	H.1	
ATC7112	H.1	
ATC7113	H.1	
ATC7114	H.1	
ATC7115	H.1	
ATC7116	H.1	
ATC7124	H.1	
ATC7125	H.1	
ATC7152	H.2	
ATC7153	H.2	
ATC7154	H.2	
ATC7155	H.2	
ATC7156	H.2	
ATC7157	H.2	
ATC7158	H.2	
ATC7172	H.2	
ATC7189	H.1	
ATC7236	H.2	
ATC7237	H.2	
ATC7251	M.6	
ATC7257	H.2	
ATC7262	H.1	
ATC7263	H.1	
ATC7266	H.1	
ATC7267	H.1	
ATC7268	H.1	
ATC7288	H.1	
ATC7290	H.1	
ATC7309	H.1	
ATC7310	H.1	
ATC7315	H.1	
ATC7344	H.2	
ATC7394	H.2	
ATC7564	H.2	
ATC7568	H.1	
ATC7569	H.2	
ATC7588	H.2	
ATC7593	H.2	
ATC7595	H.2	
AUA72	D.3	
AUA172	D.3	
AUA173	D.3	
AUA504	D.4	
AUA585	D.4	
AUA692	B.1	
AUA699	D.4	
AUA847	D.4	
AUA868	D.4	
AUA869	D.4	
AUA875	D.3	
AUA878	D.4	
AUA1433	D.3	
AUA1435	D.4	
AUA1447	D.3	
AUA1453	D.4	
AUA1453	D.11	
AUA1455	D.4	
AUA1456	D.4	
AUA1459	D.4	
AUA1466	D.4	
AUA1468	D.4	
AUA1478	D.5	
AUA1486	D.5	
AUA1500	D.4	
AUA1661	D.4	
AUA1662	D.4	
AUA1785	D.3	
AUA1863	D.4	
AUA4083	D.3	
AUA4607	D.3	
AUA4609	D.3	
AUA4611	D.3	
AUA4645	D.3	
AUA4646	D.3	
AUA4647	D.3	
AUA4850	D.4	
AUA6003	D.4	
AUA6012	D.3	
AUA6017	D.4	
AUA6021	D.4	
AUA6034	D.4	
AUA6036	D.4	

Part Number	Page	Amdt. Number
AUA6058	D.3	
AUB521	D.3	
AUB579	D.3	
AUB581	D.3	
AUB582	D.3	
AUB593	D.3	AUB 809
AUB624	D.3	
AUB625	D.3	
AUB6003	D.3	
AUB6004	D.3	
AUB6007	D.4	
AUB6015	D.3	
AUB6022	D.4	
AUB6034	D.4	
AUB6045	D.4	
AUC914	D.6	
AUC935	D.10	
AUC963	D.6	
AUC1024	D.11	
AUC1037	D.8	
AUC1037	D.12	
AUC1041	D.11	
AUC1054	D.11	
AUC1123	D.8	
AUC1123	D.11	
AUC1130	A.15	
AUC1147	D.8	
AUC1147	D.11	
AUC1151	D.13	
AUC1152	D.9	
AUC1152	D.11	
AUC1152	D.14	
AUC1153	D.16	
AUC1170	D.7	
AUC1170	D.10	
AUC1196	D.8	
AUC1206	D.15	
AUC1215	D.14	
AUC1249	D.13	
AUC1250	D.10	
AUC1250	D.13	
AUC1302	D.14	
AUC1310	D.13	
AUC1313	D.8	
AUC1313	D.12	
AUC1317	D.13	
AUC1318	D.13	
AUC1319	D.13	
AUC1329	D.13	
AUC1358	D.8	
AUC1358	D.12	
AUC1358	D.14	
AUC1374	D.15	
AUC1375	D.15	
AUC1380	D.16	
AUC1400	D.14	
AUC1421	D.14	
AUC1424	D.15	
AUC1443	D.15	
AUC1444	D.15	
AUC1557	D.9	
AUC1557	D.11	
AUC1557	D.12	
AUC1833	D.3	
AUC1867	D.9	
AUC1867	D.11	
AUC1928	D.9	
AUC1928	D.11	
AUC1980	D.9	
AUC1980	D.11	
AUC2001	D.7	
AUC2001	D.10	
AUC2002	D.7	
AUC2002	D.10	
AUC2002	D.13	
AUC2006	D.7	
AUC2006	D.10	
AUC2010	D.6	
AUC2010	D.10	
AUC2014	D.6	
AUC2014	D.10	
AUC2018	D.7	
AUC2019	D.7	
AUC2020	D.7	
AUC2023	D.8	
AUC2027	D.8	
AUC2027	D.11	
AUC2028	D.8	
AUC2028	D.11	
AUC2029	D.8	
AUC2029	D.11	
AUC2030	D.8	
AUC2030	D.11	
AUC2031	D.7	
AUC2044	D.6	
AUC2044	D.10	
AUC2057	D.6	
AUC2057	D.10	
AUC2057	D.13	
AUC2062	D.8	
AUC2064	D.10	
AUC2065	D.6	
AUC2065	D.10	
AUC2066	D.6	
AUC2066	D.10	
AUC2067	D.10	
AUC2079	D.12	
AUC2085	D.12	
AUC2086	D.12	
AUC2087	D.12	
AUC2089	D.12	
AUC2096	D.6	
AUC2096	D.10	
AUC2097	D.6	
AUC2097	D.10	
AUC2098	D.6	
AUC2098	D.10	
AUC2106	D.8	
AUC2106	D.12	
AUC2106	D.15	
AUC2108	D.9	
AUC2110	D.8	
AUC2110	D.16	
AUC2114	D.13	
AUC2139	D.9	
AUC2141	D.3	
AUC2141	D.9	
AUC2141	D.11	
AUC2141	D.12	
AUC2142	D.3	
AUC2175	D.6	
AUC2175	D.7	
AUC2175	D.10	
AUC2175	D.13	
AUC2175	D.14	
AUC2239	D.11	
AUC2256	D.9	
AUC2419	D.9	
AUC2419	D.12	
AUC2451	D.7	
AUC2451	D.10	
AUC2451	D.15	
AUC2521	D.7	
AUC2521	D.10	
AUC2542	D.16	
AUC2625	D.15	
AUC2669	D.12	
AUC2672	D.8	
AUC2672	D.9	
AUC2693	D.12	
AUC2698	D.3	
AUC2698	D.9	
AUC2698	D.11	
AUC2867	D.9	
AUC3071	D.7	
AUC3071	D.10	
AUC3116	D.14	
AUC3127	D.11	
AUC3139	D.11	
AUC3146	D.11	
AUC3200	D.11	
AUC3280	D.8	
AUC3280	D.12	
AUC3464	D.7	
AUC3481	A.26	
AUC4067	D.8	
AUC4260	D.8	
AUC4260	D.11	
AUC4261	D.8	
AUC4261	D.11	
AUC4334	D.9	
AUC4386	D.6	
AUC4387	D.13	
AUC4490	D.6	
AUC4490	D.10	
AUC4612	D.8	
AUC4612	D.9	
AUC4612	D.12	
AUC4751	D.8	
AUC4753	D.12	
AUC4759	D.11	
AUC4771	D.8	
AUC4771	D.12	
AUC4781	D.12	
AUC4790	D.7	
AUC4790	D.11	
AUC4795	D.11	
AUC4797	D.11	
AUC4834	D.12	
AUC4838	D.12	
AUC4839	D.8	
AUC4839	D.12	
AUC4859	D.8	
AUC4900	D.7	
AUC4900	D.10	
AUC4900	D.13	
AUC4943	D.6	
AUC4943	D.10	
AUC4944	D.6	
AUC4944	D.10	
AUC5002	D.15	
AUC5032	D.15	
AUC8067	D.13	
AUC8071	D.6	
AUC8071	D.10	
AUC8075	D.6	
AUC8099	D.7	
AUC8102	D.6	
AUC8103	D.6	
AUC8103	D.10	
AUC8114	D.13	
AUC8129	D.11	
AUC8149	D.7	
AUC8155	D.7	
AUC8155	D.10	
AUC8170	D.9	
AUC8170	D.11	
AUC8170	D.14	
AUC8177	D.11	
AUC8179	D.11	
AUC8206	D.7	
AUC8221	D.10	
AUC8242	D.6	
AUC7243	D.6	
AUC8244	D.10	
AUC8245	D.10	

Part Number	Page	Amdt. Number
AUC8366	D.9	
AUC8367	D.9	
AUC8396	D.8	
AUC8396	D.15	
AUC8400	D.15	
AUC8453	D.13	
AUC8457	D.15	
AUC8459	D.14	
AUC8460	D.13	
AUC8461	D.13	
AUC8462	D.15	
AUC8471	D.13	
AUC8473	D.15	
AUC8475	D.14	
AUC8478	D.13	
AUC8483	D.15	
AUC8667	D.13	
AUC8673	D.7	
AUC8723	D.13	
AUC8724	D.13	
AUC8733	D.13	
AUC8782	D.13	
AUC8783	D.13	
AUC8790	D.13	
AUC8791	D.14	
AUC8794	D.14	
AUC8961	D.11	
AUC8964	D.7	
AUC9060	D.6	
AUC9061	D.6	
AUC9068	D.10	
AUC9069	D.10	
AUC9074	D.6	
AUC9075	D.6	
AUC9160	D.13	
AUC961	D.13	
AUC9162	D.13	
AUD18	D.13	
AUD1112	D.7	
AUD1112	D.10	
AUD1126	D.13	
AUD1127	D.13	
AUD1128	D.13	
AUD1238	D.10	
AUD1288	D.7	
AUD1332	D.7	
AUD1332	D.10	
AUD2049	D.15	
AUD2050	D.15	
AUD2062	D.13	
AUD2063	D.13	
AUD2076	D.15	
AUD2104	D.15	
AUD2133	D.14	
AUD2134	D.14	
AUD2136	D.15	
AUD2161	D.15	
AUD2162	D.15	
AUD2163	D.15	
AUD2164	D.15	
AUD2178	D.13	
AUD2179	D.13	
AUD2198	D.14	
AUD2199	D.14	
AUD9056	D.16	
AUD9057	D.15	
AUD9080	D.14	
AUD9081	D.14	
AUD9082	D.14	
AUD9092	D.15	
AUD9093	D.15	
AUD9096	D.14	
AUD9187	D.6	
AUD9187	D.10	
AUD9189	D.6	
AUD9202	D.14	
AUD9204	D.14	
AUD9205	D.14	
AUD9206	D.14	
AUD9253	D.14	
AUD9254	D.14	
AUD9257	D.14	
AUE38	D.3	
AUE86	D.15	
AUE87	D.15	
AUE267	D.14	
AUE268	D.14	
AUE271	D.14	
AUE273	D.14	
AUF274	D.14	
AUE275	D.14	
AWZ104	A.27	AWN 104
AWZ105	A.26	
AWZ105	R.5	
AYH4040	K.2	
1B1033	A.3	
1B1219	A.4	
1B1233	A.12	
1B1314	A.22	
1B1315	A.22	
1B1424	A.13	
1B1424	A.17	
1B1714	A.6	
1B2178	A.14	
1B2261	A.14	
1B2697	A.27	
1B2721	N.4	
1B2736	D.1	
1B2796	N.15	
1B2800	N.15	
1B2801	N.16	
1B2804	N.3	
1B2805	N.8	
1B2836	N.4	
1B2837	N.4	
1B2847	N.14	
1B2897	A.11	
1B3346	F.6	
1B3346	F.14	
1B3363	F.4	
1B3363	F.13	
1B3364	F.10	
1B3632	F.5	
1B3632	F.13	
1B3634	F.5	
1B3634	F.13	
1B3650	F.19	
1B3655	F.11	
1B3655	F.15	
1B3706	F.4	
1B3706	F.13	
1B3707	F.4	
1B3707	F.13	
1B3708	F.4	
1B3708	F.13	
1B3710	F.4	
1B3710	F.8	
1B3710	F.13	
1B3710	F.16	
1B3713	F.4	
1B3713	F.13	
1B3719	F.1	
1B3719	F.6	
1B3719	F.10	
1B3719	F.14	
1B3721	F.11	
1B3736	F.5	
1B3736	F.9	
1B3736	F.13	
1B3736	F.17	
1B3760	F.5	
1B3760	F.13	
1B3763	F.2	
1B3766	F.2	
1B3766	F.6	
1B3767	F.2	
1B3767	F.6	
1B3836	F.4	
1B3836	F.8	
1B3836	F.13	
1B3836	F.16	
1B4316	K.2	
1B4339	S.1	
1B4365	K.1	
1B4366	K.1	
1B4392	K.2	
1B4399	K.2	
1B4400	K.2	
1B4422	A.22	
1B4423	A.22	
1B4428	A.22	
1B4457	K.2	
1B4459	K.2	
1B4475	K.1	
1B4476	K.1	
1B4486	K 5	
1B4501	K.5	
1B4513	K.5	
1B4517	K.1	
1B4525	K.5	
1B4526	K.5	
1B4527	K.2	
1B4528	K.2	
1B4529	K.2	
1B4530	K.2	
1B4569	K.5	
1B5329	M.6	
1B6127	J.3	
1B6137	J.3	
1B6138	J.3	
1B6195	J.3	
1B6199	J.3	
1B6214	J.5	
1B6226	N.12	
1B6256	J.3	
1B6257	J.1	
1B6257	J.3	
1B6257	J.5	
1B6277	J.2	
1B6277	J.3	
1B6278	J.2	
1B6278	J.3	
1B6281	J.3	
1B6282	J.3	
1B6285	J.3	
1B6286	J.3	
1B6287	J.3	
1B6292	J.4	
1B6299	J.5	
1B6300	J.5	
1B6301	J.5	
1B6303	N.12	
1B6340	J.4	
1B6346	N.11	
1B7354	K.5	
1B7355	K.4	
1B7356	K.5	
1B7362	M.5	
1B7364	M.5	
1B7366	H.6	
1B7386	G.1	
1B7424	M.5	
1B7437	H.3	

Part Number	Page	Amdt. Number
1B7438	H.3	
1B7463	L.1	
1B7464	L.1	
1B7470	H.6	
1B7472	L.1	
1B7473	L.1	
1B7474	G.1	
1B7480	H.5	
1B7489	G.1	
1B7490	H.3	
1B7526	H.3	
1B7527	M.4	
1B8036	P.1	
1B8037	P.1	
1B8038	P.1	
1B8039	P.1	
1B8040	P.1	
1B8041	P.1	
1B8048	P.1	
1B8057	P.1	
1B8077	P.1	
1B8078	P.1	
1B8347	A.22	
1B8641	R.1	
1B8648	R.1	
1B8658	R.1	
1B8670	R.1	
1B8672	R.1	
1B8685	R.2	
1B8688	R.1	
1B8689	R.1	
1B8693	R.1	
1B8698	R.1	
1B8699	R.1	
1B8703	R.2	
1B8731	R.2	
1B8750	E.2	
1B7850	M.1	
1B8751	E.2	
1B8751	M.1	
1B8762	H.5	
1B8763	H.5	
1B8764	H.5	
1B8766	R.2	
1B8777	R.2	
1B8823	A.22	
1B8839	R.2	
1B8840	R.2	
1B8871	E.2	
1B8895	M.5	
1B8896	M.5	
1B8962	M.3	
1B8930	H.5	
1B8937	R.19	
1B8940	R.19	
1B8965	M.4	
1B8995	S.1	
1B8997	S.1	
1B9030	N.4	
1B9031	N.4	
1B9061	O.2	
1B9074	M.5	
1B9078	N.16	
1B9080	N.15	
1B9095	N.7	
1B9096	N.5	
1B9100	N.9	
1B9101	N.9	
1B9140	O.2	
1B9141	O.2	
1B9188	O.2	
4B1083	R.7	
4B1085	R.5	
4B1086	R.9	
B41087	R.7	
4B1088	R.7	
4B1089	R.5	
4B1090	R.9	
4B1091	R.8	
4B1092	R.8	
4B2048	R.9	
4B2050	R.4	
4B2053	R.7	
4B2502	J.3	
4B3172	R.28	
4B3180	R.26	
4B3181	R.26	
4B3182	R.26	
4B3183	R.26	
4B3200	R.22	
4B3207	R.28	
4B3208	R.28	
4B3215	R.29	
4B3217	R.29	
4B3218	R.29	
4B3219	R.29	
4B3220	R.29	
4B3221	R.29	
4B3222	R.29	
4B3223	R.11	
4B3226	R.30	
4B3228	R.37	
4B3229	R.37	
4B3247	R.29	
4B3248	R.34	
4B3249	R.34	
4B3253	R.34	
4B3255	R.34	
4B3257	R.42	
4B4124	R.28	
4B4204	R.19	
4B4205	R.19	
4B4206	R.21	
4B4207	R.21	
4B4210	R.33	
4B4211	R.30	
4B4216	R.35	
4B5118	R.34	
4B5119	R.34	
4B5120	R.34	
4B5121	R.34	
4B5122	R.32	
4B5123	R.31	
4B5124	R.31	
4B5125	R.31	
4B5126	R.31	
4B5127	R.32	
4B5128	R.32	
4B5133	R.37	
4B5134	R.37	
4B5139	R.32	
4B5140	R.33	
4B5142	R.33	
4B5143	R.33	
4B7427	R.3	
4B7428	R.3	
4B8372	R.37	
4B8373	R.37	
4B8374	R.37	
4B8380	R.23	
4B8521	R.42	
4B8646	R.5	
4B9352	R.3	
4B9354	R.3	
4B9355	R.3	
4B9356	R.3	
4B9357	R.3	
4B9358	R.3	
4B9365	R.3	
4B9359	R.3	
4B9364	R.4	
4B9366	R.3	
11B121	A.7	
11B174	B.2	
11B206	B.2	
11B511	A.7	
11B618	D.18	
11B619	D.18	
11B621	D.18	
11B622	D.18	
11B623	D.18	
11B624	R.45	
11B2011	D.1	
11B2115	C.1	
11B2116	C.1	
11B2117	R.45	
11B2118	C.1	
11B2119	C.1	
11B2120	A.23	
11B2122	A.23	
11B2137	D.1	
11B2143	A.24	
11B2145	A.24	
11B2146	A.24	
11B2151	A.24	
11B2155	A.25	
11B2156	A.25	
11B2157	A.25	
11B2159	A.25	
11B2163	N.4	
11B2186	O.1	
11B2188	O.1	
11B2207	A.24	
11B2301	C.1	
11B2348	A.26	
11B2349	A.26	
11B2350	A.26	
11B2351	N.4	
11B2352	A.27	
11B2356	A.23	
11B2357	A.23	
11B2365	A.27	
11B2366	A.27	
11B2375	D.1	
11B2380	D.1	
11B5068	H.5	
11B5070	H.5	
11B5071	H.5	
11B5074	A.22	
11B5113	A.22	
11B5115	A.22	
11B5166	S.1	
11B5117	R.2	
11B5119	R.2	
11B5120	R.2	
11B5123	R.2	
11B5126	R.2	
11B5128	R.2	
11B5138	M.2	
11B5148	R.2	
11B5149	M.4	
11B5188	A.22	
11B5196	S.1	
11B5199	H.5	
11B5202	R.1	
11B5205	R.1	
11B5208	R.2	
11B5212	R.1	
11B5213	R.1	
11B5216	R.1	
11B5218	R.2	
11B5220	R.2	
11B5223	R.2	
11B5224	R.2	
11B5225	R.1	
11B5228	R.1	

Part Number	Page	Amdt. Number
11B5231	R.2	
11B5232	R.2	
11B5234	H.6	
11B5236	R.2	
11B5251	R.2	
11B5252	R.1	
11B5254	R.1	
11B5264	R.1	
11B5265	R.1	
11B5266	H.5	
11B5268	M.1	
11B5271	E.2	
11B5273	M.1	
11B5277	M.1	
11B5279	M.1	
11B5282	M.5	
11B5283	M.1	
11B5294	E.3	
11B5298	E.3	
11B5303	R.20	
11B5308	R.20	
11B5309	R.20	
11B5312	R.20	
11B5323	E.2	
11B5338	M.5	
11B5510	E.2	
11B5510	M.1	
11B5521	M.3	
11B5522	M.3	
11B5530	R.2	
11B5534	R.2	
11B5543	M.4	
11B5760	M.9	
12B594	A.4	
12B682	A.5	
12B704	D.18	
12B823	B.1	
14B766	R.5	
14B1382	R.21	
14B1383	R.21	
14B1385	R.35	
14B1386	R.22	
14B1387	R.21	
14B1388	R.22	
14B1708	R.25	
14B1718	R.9	
14B1719	R.9	
14B1721	R.13	
14B1722	R.13	
14B1723	R.24	
14B1725	R.13	
14B1726	R.13	
14B1727	R.24	
14B1728	R.24	
14B1729	R.40	
14B1730	R.36	
14B1815	R.12	
14B1867	R.41	
14B1884	D.1	
14B1917	R.34	
14B1941	R.20	
14B1963	R.13	
14B1964	R.13	
14B2005	R.6	
14B2006	R.6	
14B2016	R.41	
14B2036	D.1	
14B2038	R.9	
14B2512	R.12	
14B2513	R.12	
14B2531	D.1	
14B2544	R.17	
14B2546	R.8	
14B2547	R.12	
14B2630	R.14	
14B2685	R.42	
14B2742	R.19	
14B2749	R.43	
14B2767	R.22	
14B2768	R.22	
14B2774	R.22	
14B2809	R.9	
14B2841	R.16	
14B2842	R.16	
14B2843	R.16	
14B2845	R.11	
14B2846	R.11	
14B2877	R.22	
14B3462	R.13	
14B3463	R.13	
14B3732	R.7	
14B4466	R.16	
14B5588	N.13	
14B5589	N.13	
14B5596	N.13	
14B5597	N.13	
14B5598	N.13	
14B5623	R.10	
14B5711	R.10	
14B5722	R.5	
14B5723	R.5	
14B5724	R.5	
14B5725	R.5	
14B5726	R.5	
14B5727	R.5	
14B5728	R.5	
14B5735	R.12	
14B5739	R.9	
14B5749	R.3	
14B5750	R.3	
14B5759	R.24	
14B5773	R.24	
14B5775	R.40	
14B5776	R.40	
14B5777	R.24	
14B5739	R.24	
14B5796	R.24	
14B5809	R.3	
14B5810	R.3	
14B5811	R.3	
14B5812	R.3	
14B5861	R.5	
14B5862	R.41	
14B5876	R.25	
14B5877	R.25	
14B5889	R.14	
14B5890	R.14	
14B5891	R.14	
14B5892	R.14	
14B5896	R.7	
14B6453	R.7	
14B6461	R.3	
14B6462	R.3	
14B6467	R.9	
14B6597	R.13	
14B6598	R.44	
14B6599	R.44	
14B6600	R.44	
14B6601	R.45	
14B6602	R.45	
14B6603	R.45	
14B6632	D.1	
14B6729	R.25	
14B6740	R.40	
14B6743	R.14	
14B6754	R.11	
14B6756	R.42	
14B6757	R.42	
14B6759	R.39	
14B6760	R.39	
14B6761	R.39	
14B6765	R.25	
14B6766	R.25	
14B6771	R.42	
14B6805	R.11	
14B6806	R.6	
14B6816	R.28	
14B6817	R.9	
14B6822	R.7	
14B6823	R.7	
14B6824	R.25	
14B6825	R.25	
14B6828	R.39	
14B6877	R.10	
14B6895	N.4	
14B7458	R.12	
14B7466	R.13	
14B7468	R.39	
14B7474	R.39	
14B7475	R.39	
14B7476	R.39	
14B7478	R.39	
14B7481	R.7	
14B7482	R.7	
14B7483	R.7	
14B7484	R.7	
14B7544	R.12	
14B7545	R.12	
14B7550	R.45	
14B7554	R.16	
14B7555	R.16	
14B7556	R.16	
14B7557	R.16	
14B7562	R.16	
14B7563	R.16	
14B7564	R.16	
14B7565	R.16	
14B7566	R.16	
14B7579	R.40	
14B7581	R.28	
14B7584	R.39	
14B7585	R.39	
14B7586	R.39	
14B7587	R.39	
14B7648	R.17	
14B7649	R.17	
14B7651	R.17	
14B7660	R.14	
14B7661	R.6	
14B7662	R.6	
14B7711	R.43	
14B7712	R.43	
14B7742	R.18	
14B7744	R.18	
14B7755	R.18	
14B7756	R.18	
14B7762	R.18	
14B7764	R.18	
14B7776	R.44	
14B7777	R.44	
14B7779	R.43	
14B7780	R.44	
14B7781	R.44	
14B7782	R.43	
14B7785	R.25	
14B7804	R.39	
14B7805	R.40	
14B7810	R.44	
14B7829	R.34	
14B7830	R.34	
14B8453	R.35	
14B8464	R.35	
14B8471	R.36	
14B8472	R.36	
14B8493	R.23	
14B8523	R.25	

Part Number	Page	Amdt. Number
14B8524	R.25	
14B8692	R.13	
14B8699	R.37	
14B8708	R.34	
14B8711	R.25	
14B8712	R.18	
14B8713	R.18	
14B8780	R.43	
14B8781	R.43	
14B8781	R.43	
14B8812	R.5	
14B8813	R.11	
14B8816	N.1	
14B8840	R.18	
14B8841	R.37	
14B8842	R.36	
14B8843	R.36	
14B8844	R.36	
14B8845	R.36	
14B8846	R.36	
14B8847	R.36	
14B8848	R.36	
14B8849	R.36	
14B8850	R.36	
14B8852	R.36	
14B8875	R.34	
14B9476	R.16	
14B9484	R.24	
14B9662	R.9	
14B9663	R.9	
14B9820	R.45	
14B9821	R.45	
21B670	A.25	
24B498	R.29	
24B499	R.39	
24B503	R.14	
24B540	R.17	
24B553	R.18	
24B554	R.18	
24B601	R.19	
24B612	R.16	
24B613	R.16	
24B617	R.18	
24B618	R.18	
24B624	R.14	
24B625	R.14	
24B632	R.44	
24B633	R.44	
24B635	R.18	
24B636	R.18	
24B637	R.18	
24B638	R.18	
24B690	R.17	
24B691	R.17	
24B697	R.40	
24B725	R.40	
24B726	R.40	
24B747	N.1	
24B758	R.11	
24B773	R.6	
24B774	R.25	
24B785	R.32	
24B787	R.32	
24B789	R.36	
24B811	N.1	
24B876	R.25	
24B877	R.25	
24B880	R.25	
24B881	R.25	
24B1588	R.35	
24B1656	R.17	
24B1677	R.25	
24B1678	R.25	
24B1679	R.25	
24B1682	R.3	
24B1683	R.3	
24B1684	R.3	
24B1709	R.35	
24B1709	R.38	
24B1710	R.35	
24B1710	R.38	
24B1711	R.35	
24B1712	R.35	
24B1713	R.35	
24B1714	R.35	
24B1715	R.35	
24B1716	R.35	
24B1717	R.35	
24B1777	R.35	
24B1791	R.39	
24B1792	R.39	
24B1793	R.39	
24B1794	R.39	
24B1795	R.36	
24B1796	R.36	
BCA4309	B.3	
BCA4501	N.3	
BFS207	N.10	
BFS354	N.5	
BFS355	N.7	
BFS380	N.9	
BFS382	N.10	
BFS410	N.5	
BFS410	N.6	
BFS411	N.6	
BFS987	N.11	
BFS987	N.14	
BFS989	N.9	
BHA4066	R.41	
BHA4081	O.1	
BHA4082	R.13	
BHA4096	N.5	
BHA4097	N.6	
BHA4112	E.3	
BHA4113	O.1	
BHA4124	O.1	
BHA4125	O.1	
BHA4126	O.1	
BHA4127	O.1	
BHA4134	E.3	
BHA4137	M.4	
BHA4146	N.6	
BHA4148	N.10	
BHA4149	N.9	
BHA4151	N.13	
BHA4152	A.27	
BHA4153	N.9	
BHA4167	P.1	
BHA4168	P.1	
BHA4195	K.4	
BHA4223	O.1	
BHA4224	O.1	
BHA4235	N.5	
BHA4235	N.6	
BHA4235	N.7	
BHA4235	N.8	
BHA4235	O.1	
BHA4252	N.16	
BHA4281	O.2	
BHA4293	O.2	
BHA4294	R.42	
BHA4416	N.11	
BHA4444	N.11	
BHA4445		
BLS108	F.20	
BLS110	F.2	
BLS110	F.3	
BLS110	F.4	
BLS110	F.7	
BLS110	F.8	
BLS110	F.11	
BLS110	F.12	
BLS110	F.13	
BLS110	F.15	
BLS110	F.16	
BLS110	F.19	
BLS112	A.11	
BMK352	N.9	
BMK424	M.9	
BNN105	A.	
BNN105	/	
BTB657		
BTC101	K.2	
BTC103	K.2	
BTC104	K.3	
BTC108	K.2	
BTC109	K.2	
BTC112	K.3	
BTC113	K.3	
BTC125	K.4	
BTC126	K.3	
BTC127	K.3	
BTC134	K.2	
BTC135	K.2	
BTC171	K.4	
BTC172	K.3	
BTC173	K.3	
BTC204	K.4	
BTC205	K.4	
BTC211	K.4	
BTC260	K.4	
BTC261	K.4	
BTC280	K.2	
BTC370	K.2	
5C436	A.7	
CCN120	F.11	
CCN120	F.15	
CCN214	A.2	
CHS2512	A.20	
CHS2513	A.20	
CHS2561	A.18	
CLZ0313	R.11	
CLZ0409	A.27	
CLZ0511	R.5	
CLZ0513	E.3	
CLZ0513	M.2	
CMP0408	R.36	
CMZ0208	R.10	
CMZ0208	R.41	
CMZ0308	R.5	
CMZ0308	R.6	
CMZ0308	R.7	
CMZ0308	R.8	
CMZ0308	R.9	
CMZ0308	R.43	
CMZ0310	R.6	
CMZ0410	R.8	
CMZ0412	R.9	
CMZ0414	H.3	
CMZ0428	H.3	
CMZ0516	R.7	
CNZ102	N.3	

Part Number	Page	Amdt. Number
1G4276	K.5	
1G4279	K.5	
1G4345	K.1	
1G4345	K.6	
1G4346	K.1	
1G4348	K.1	
1G4349	K.2	
1G4350	K.1	
1G4505	K.1	
1G4505	K.6	
1G5753	H.5	
1G6236	J.2	
1G6236	J.3	
1G6353	J.4	
1G6354	J.4	
1G7484	M.5	
1G7485	M.5	
1G7594	M.6	
1G7574	M.6	
1G8075	H.2	
1G8075	K.2	
1G8084	P.1	
1G8750	E.1	
1G9310	E.2	
1G9310	M.1	
1G9314	M.1	
1G9320	H.5	
1G9321	H.5	
1G9382	A.22	
1G9384	A.22	
1G9516	E.3	
1G9529	E.3	
1G9622	E.2	
1G9622	M.4	
1G9707	R.20	
1G9799	R.20	
1G9800	R.1	
4G2541	R.41	
4G3575	R.41	
4G4920	R.10	
4G6492	R.41	
4G6492	R.42	
4G6575	R.43	
4G7614	R.25	
4G8595	R.11	
4G8595	R.18	
8G500	F.1	
8G500	F.2	
8G500	F.10	
8G500	F.11	
8G505	D.1	
8G507	A.1	
8G548	N.3	
8G531	R.45	
8G554	K.2	
8G612	A.8	
8G616	B.2	
8G622	K.5	
8G624	J.1	
8G627	A.13	
8G627	A.17	
8G632	C.1	
8G637	O.1	
8G654	D.1	
8G698	A.13	
8G705	R13	
8G2121	A.3	
8G2229	A.16	
8G2287	A.3	
8G2291	A.16	
8G2309	A.17	
8G2326	A.16	
8G2327	A.16	
8G2339	A.3	
8G2353	A.16	
8G2360	A.3	
8G3001	G.1	
8G4175	K.6	
8G4191	K.6	
8G7070	H.4	
8G7131	H.2	
8G8021	A.17	
8G8104	E.2	
8G8104	M.1	
8G8249	E.3	
8G8279	K.4	
8G8280	H.4	
8G8281	H.3	
8G8308	K.3	
8G8355	E.1	
8G8476	K.3	
8G8648	M.9	
8G8649	H.3	
8G8650	H.3	
8G8660	K.4	
8G8703	M.7	
8G8807	E.2	
8G8807	M.2	
8G9048	R.44	
8G9101	R.1	
8G9102	R.1	
8G9103	R.1	
8G9104	R.1	
8G9105	R.3	
8G9106	R.3	
8G9132	R.1	
8G9133	R.1	
8G9134	R.1	
8G9135	R.1	
8G9139	R.1	
8G9140	R.1	
8G9141	R.1	
8G9142	R.1	
8G9143	R.3	
8G9181	R.44	
8G212110	A.3	
8G212120	A.3	
8G212130	A.3	
8G212140	A.3	
8G228710	A.3	
8G228720	A.3	
8G228730	A.3	
8G228740	A.3	
11G221	B.3	
11G291	A.8	
11G2007	N.3	
11G2100	D.1	
11G9093	N.11	
14G800	R.43	
14G800	R.45	
14G1702	N.1	
14G3499	R.43	
14G3499	R.44	
14G3692	R.5	
14G3693	R.5	
14G3722	N.13	
14G5507	R.11	
14G5509	N.1	
14G5630	R.45	
14G5854	R.40	
14G6451	R.43	
14G6451	R.44	
15G5175	R3	
21G9084	O.1	
48G171	A.11	
48G171	A.12	
1H55	A.24	
1H55	A.25	
1H722	A.7	
1H723	A.7	
1H726	A.7	
1H1153	A.13	
1H3087	F.9	
1H3087	F.17	
1H3131	F.5	
1H3131	F.9	
1H3131	F.22	
1H3264	F.2	
1H3364	F.6	
1H3364	H.1	
1H5286	H.5	
1H9049	O.2	
2H10	C.1	
2H35	B.2	
2H35	N.15	
2H174	M.3	
2H400	M.3	
2H731	A.6	
2H1046	R.5	
2H1046	R.13	
2H1082	D.1	
2H1641	M.6	
2H1683	S.1	
2H2065	N.14	
2H2099	S.1	
2H2617	N.14	
2H2617	N.15	
2H2635	N.12	
2H2704	N.15	
2H2704	N.14	
2H2704	N.16	
2H3271	B.3	
2H3406	N.14	
2H3406	N.15	
2H4185	N.3	
2H4185	R.13	
2H4500	A.13	
2H4500	A.17	
2H4605	H.5	
2H4614	S.1	
2H4685	A.9	
2H4933	A.14	
2H4935	A.19	
2H4978	N.11	
2H4978	N.14	
2H4992	N.14	
2H5133	R.10	
2H6136	R.26	
2H6136	R.27	
2H6961	R.26	
2H8041	R.42	
2H8445	R.26	
2H8445	R.27	
2H9215	R.11	
2H9215	R.13	
3H599	M.3	
3H660	J.2	
3H743	D.2	
3H804	A.14	
3H822	N.16	
3H852	N.3	

Part Number	Page	Amdt. Number
CNZ102	N.9	
CNZ102	N.10	
CNZ102	R.10	
CNZ102	R.24	
CPS0204	D.9	
CPZ0306	R.7	
CTP605	R.30	
CTZ610	R.31	
CWN804	R.36	
CWZ806	R.31	
1D1780	R.45	
1D1960	A.6	
1D1977	A.7	
1D6132	J.5	
5D8513	R.39	
5D8627	R.39	
5D8826	R.39	
5D8827	R.39	
5D8828	R.39	
8D5768	D.1	
DMK5418	A.23	
DMP1239	R.7	
DMP2824	R.24	
1F657	A.24	
1F1293	A.24	
1F6153	J.5	
2F3040	F.5	
2F3040	F.13	
2F3151	F.5	
2F3151	F.13	
2F3152	F.5	
2F3152	F.13	
2F3154	F.5	
2F3154	F.13	
2F3166	F.5	
2F3166	F.13	
2F3198	F.4	
2F3198	F.8	
2F3198	F.13	
2F3198	F.16	
3F90	N.16	
3F90	R.11	
8F2408	R.35	
8F2408	R.37	
8F2409	R.35	
8F2409	R.37	
FHS0510	F.18	
FHS0511	F.18	
FHS0513	F.22	
FHS2510	D.18	
FNN104	A.9	
FNN104	F.21	
FNN105	A.1	
FNN105	A.8	
FNN105	A.10	
FNN105	A.14	
FNN106	F.5	
FNN106	F.22	
FNN107	A.14	
FNN107	H.1	
FNN206	A.8	
FNN505	F.18	
FNN506	A.8	
FNZ103	A.25	
FNZ103	A.26	
FNZ103	A.27	
FNZ103	D.2	
FNZ103	M.3	
FNZ103	N.4	
FNZ103	N.14	
FNZ103	N.15	
FNZ103	N.16	
FNZ103	R.5	
FNZ103	R.6	
FNZ103	R.7	
FNZ103	R.8	
FNZ103	R.9	
FNZ103	R.11	
FNZ103	R.16	
FNZ103	R.17	
FNZ103	R.19	
FNZ103	R.24	
FNZ103	R.25	
FNZ103	R.28	
FNZ103	R.32	
FNZ103	R.33	
FNZ103	R.37	
FNZ103	R.40	
FNZ103	R.43	
FNZ103	R.45	
FNZ104	A.24	
FNZ104	A.25	
FNZ104	A.27	
FNZ104	B.3	
FNZ104	D.1	
FNZ104	D.2	
FNZ104	E.2	
FNZ104	F.1	
FNZ104	F.10	
FNZ104	F.19	
FNZ104	H.5	
FNZ104	J.3	
FNZ104	K.1	
FNZ104	K.6	
FNZ104	M.1	
FNZ104	M.3	
FNZ104	M.4	
FNZ104	M.5	
FNZ104	M.9	
F.NZ104	N.11	
FNZ104	N.15	
F.NZ104	R.5	
FNZ104	R.6	
FNZ104	R.7	
FNZ103	R.8	
FNZ104	R.9	
FNZ104	R.13	
FNZ014	R.14	
FNZ104	R.19	
FNZ104	R.22	
FNZ104	R.24	
FNZ104	R.25	
FNZ104	R.40	
FNZ105	A.18	
FNZ105	A.20	
FNZ105	A.22	
FNZ105	A.23	
FNZ105	A.24	
FNZ105	C.1	
FNZ105	D.4	
FNZ105	D.18	
FNZ105	F.18	
FNZ105	F.22	
FNZ105	J.3	
FNZ105	K.3	
FNZ105	K.5	
FNZ105	M.4	
FNZ105	M.5	
FNZ105	M.8	
FNZ105	R.12	
FNZ106	A.12	
FNZ106	A.19	
FNZ106	A.21	
FNZ106	A.22	
FNZ106	A.23	
FNZ106	F.9	
FNZ106	G.1	
FNZ106	H.1	
FNZ106	H.3	
FNZ106	H.5	
FNZ106	H.6	
FNZ106	J.3	
FNZ106	K.2	
FNZ106	L.1	
FNZ106	N.2	
FNZ106	R.20	
FNZ107	A.22	
FNZ107	H.5	
FNZ107	L.1	
FNZ204	M.5	
FNZ205	D.1	
FNZ205	F.18	
FNZ205	H.3	
FNZ205	M.8	
FNZ206	A.22	
FNZ206	E.3	
FNZ206	H.5	
FNZ206	M.4	
FNZ207	A,13	
FNZ210	J.4	
FNZ307	J.4	
FNZ407	J.4	
FNZ407	K.2	
FNZ408	K.5	
FNZ506	L.1	
FNZ507	K.2	
FNZ612	F.2	
FNZ612	F.7	
FNZ612	H.2	
FNZ2210	J.4	
FWP406	R.22	
FWP406	R.28	
FWP406	R.29	
FWP406	R.30	
FWP406	R.31	
FWP406	R.34	
1G838	A.6	
1G1365	A.16	
1G1814	A.5	
1G2175	A.26	
1G2268	D.18	
1G2342	A.8	
1G2342	A.14	
1G2697	A.24	
1G2887	A.7	
1G3410	B.2	
1G3581	F.4	
1G3581	F.13	
1G3668	F.2	
1G3668	H.1	
1G3709	F.5	
1G3709	F.9	
1G3709	F.13	
1G3709	F.17	
1G3804	F.1	
1G3804	F.10	
1G4116	H.3	
1G4271	K.1	

Part Number	Page	Amdt. Number
7H5872E	F.20	
7H5872F	F.20	
7H5872G	F.20	
7H5873	F.20	
7H5877	F.21	
7H5879	F.21	
7H5881	F.21	
7H5882	F.21	
7H5883	F.21	
7H5884	F.21	
7H5885E	F.21	
7H5885F	F.21	
7H5885G	F.21	
7H5885H	F.21	
7H5885J	F.21	
7H5888	F.22	
7H5889	F.22	
7H5894	F.22	
7H5896	F.18	
7H5898	F.19	
7H5898	F.20	
7H6024	J.2	
7H6024	J.6	
7H6079	J.1	
7H6079	J.5	
7H6116	J.1	
7H6116	J.5	
7H6118	J.1	
7H6118	J.6	
7H6128	J.1	
7H6128	J.6	
7H6129	J.1	
7H6129	J.6	
7H6130	J.1	
7H6130	J.6	
7H6155	J.1	
7H6167	J.2	
7H6167	J.6	
7H6267	J.1	
7H6267	J.6	
7H6391	J.1	
7H6391	J.5	
7H6392	J.1	
7H6392	J.5	
7H6436	J.2	
7H6436	J.6	
7H6460	J.5	
7H6507	J.1	
7H6507	J.5	
7H6515	J.1	
7H6515	J.5	
7H6589	J.1	
7H6589	J.5	
7H6598	J.1	
7H6598	J.5	
7H6599	J.1	
7H6599	J.5	
7H6620	J.1	
7H6620	J.5	
7H6836	R.45	
7H6838	N.5	
7H6892	J.4	
7H6893	J.4	
7H6958	M.7	
7H6959	M.7	
7H6960	M.7	
7H6961	M.7	
7H6962	M.7	
7H6963	M.7	
7H6964	M.7	
7H6965	M.7	
7H6966	M.7	
7H6967	M.7	
7H7553	A.12	
7H7556	A.11	
7H8196	F.19	
7H8273	F.21	
7H9785	R.15	
7H9830	N.3	
7H9830	R.13	
11H169	S.1	
11H1018	K.1	
11H1018	K.6	
11H1051	S.1	
12H650	A.7	
12H736	A.18	
13H50	S.1	
13H59	R.43	
13H76	R.44	
13H77	R.44	
13H78	R.44	
13H137	F.19	
13H231	R.15	
13H297	M.3	
13H349	N.7	
13H472	N.11	
13H473	N.11	
13H709	J.2	
13H772	A.13	
13H837	N.2	
13H1596	M.9	
17H3	A.11	
17H4	A.11	
17H31	A.4	
17H341	A.16	
17H342	A.4	
17H630	O.1	
17H630	O.2	
17H631	O.1	
17H689	O.1	
17H689	O.2	
17H690	O.1	
17H690	O.2	
17H775	A.11	
17H786	M.5	
17H787	M.5	
17H788	M.5	
17H789	M.5	
17H790	M.5	
17H819	R.44	
17H844	O.2	
17H932	O.1	
17H932	O.2	
17H940	A.11	
17H1061	O.2	
17H1068	O.1	
17H1068	O.2	
17H1148	A.11	
17H1150	A.11	
17H1152	A.11	
17H1167	A.11	
17H1168	A.11	
17H1173	A.11	
17H1272	A.11	
17H1304	O.1	
17H1304	O.2	
17H1341	O.1	
17H1341	O.2	
17H1343	O.2	
17H1476	A.11	
17H1493	R.43	
17H1494	R.44	
17H1496	O.2	
17H1574	R.45	
17H1591	R.44	
17H1597	R.44	
17H1642	O.1	
17H1642	O.2	
17H1658	O.1	
17H1684	O.1	
17H1758	A.11	
17H1822	O.2	
17H2142	J.4	
17H2143	J.4	
17H2144	J.4	
17H2392	B.1	
17H2472	N.1	
17H2660	J.1	
17H2660	J.6	
17H2805	J.2	
17H2807	J.2	
17H3693	A.11	
17H4010	E.3	
17H4011	E.3	
17H4132	E.2	
17H4132	M.1	
17H4132	M.8	
17H4141	M.8	
17H4238	M.3	
17H4327	E.3	
17H4507	H.3	
17H4508	M.3	
17H4509	E.2	
17H4509	M.1	
17H4509	M.7	
17H4513	E.2	
17H4513	M.1	
17H4514	M.3	
17H4515	M.3	
17H4516	E.3	
17H4517	E.3	
17H4518	M.3	
17H4519	M.3	
17H4528	M.3	
17H4546	H.3	
17H4554	E.3	
17H4556	M.3	
17H4557	M.3	
17H4558	M.3	
17H4559	M.4	
17H4560	M.4	
17H4561	E.2	
17H4561	M.1	
17H4561	M.2	
17H4561	M.8	
17H4596	M.8	
17H4597	M.8	
17H4601	M.8	
17H4602	M.8	
17H4603	M.8	
17H4636	K.3	
17H4637	K.3	
17H4637	K.4	
17H4639	K.3	
17H4639	K.4	
17H4640	K.3	
17H4640	K.4	
17H4641	H.3	
17H4642	K.3	
17H4642	K.4	
17H4643	K.3	
17H4643	K.4	
17H4644	K.3	
17H4665	M.4	
17H4666	M.3	
17H4679	K.3	
17H4680	K.3	
17H4681	K.3	
17H4690	H.3	
17H4712	E.3	

PART NUMBER INDEX

Part Number	Page	Amdt. Number
3H914	N.14	
3H964	B.2	
3H993	N.5	
3H993	N.7	
3H1281	N.2	
3H1454	N.11	
3H1589	H.2	
3H1655	B.2	
3H1656	B.2	
3H1657	B.2	
3H1658	B.2	
3H1659	B.2	
3H1660	B.2	
3H1813	N.9	
3H1836	N.3	
3H1894	M.3	
3H1910	N.3	
3H2006	A.8	
3H2092	A.14	
3H2138	B.1	
3H2144	N.16	
3H2192	K.1	
3H2192	M.5	
3H2287	E.3	
3H2287	M.4	
3H2429	M.9	
3H2449	N.11	
3H2502	A.1	
3H2506	R.42	
3H2615	O.1	
3H2695	B.3	
3H2696	B.3	
3H2765	N.11	
3H2824	N.3	
3H2825	N.3	
3H2962	N.5	
3H2962	N.6	
3H2962	N.7	
3H3028	K.1	
3H3058	N.3	
3H3059	N.11	
3H3060	N.11	
3H3076	A.23	
3H3079	H.6	
3H3079	K.5	
3H3095	N.3	
3H3096	N.3	
3H3098	N.3	
3H3099	N.3	
3H3100	N.3	
7H25	A.11	
7H28	A.11	
7H147	A.11	
7H1709	P.1	
7H1756	A.11	
7H1758	A.11	
7H1759	A.11	
7H1761	A.11	
7H1762	A.11	
7H1763	A.11	
7H1764	A.11	
7H1765	A.11	
7H1804	P.1	
7H1805	P.1	
7H1806	P.1	
7H1840	A.11	
7H3001	E.1	
7H3011	E.1	
7H3042	E.1	
7H3048	E.1	
7H3067	E.1	
7H3069	E.1	
7H3078	E.1	
7H3082	E.1	
7H3092	E.1	
7H3120	E.1	
7H3193	E.1	
7H3195	E.1	
7H3239	E.1	
7H3240	E.1	
7H3251	E.1	
7H3777	J.4	
7H3835	G.1	
7H3836	G.1	
7H3858	G.1	
7H3859	G.1	
7H3902	G.1	
7H3905	G.1	
7H3912	G.1	
7H3913	G.1	
7H3918	G.1	
7H3956	G.1	
7H3962	G.1	
7H4030	E.3	
7H4379	M.3	
7H4419	E.3	
7H4419	H.3	
7H4419	K.3	
7H4419	K.4	
7H4429	H.3	
7H4451	E.2	
7H4451	M.1	
7H4451	M.2	
7H4461	H.3	
7H4596	H.3	
7H4726	M.3	
7H4751	E.2	
7H4751	M.1	
7H4751	M.8	
7H4752	E.2	
7H4752	M.1	
7H4752	M.2	
7H4752	M.8	
7H4757	E.2	
7H4757	M.1	
7H4844	K.3	
7H4867	M.3	
7H4904	H.3	
7H4906	H.3	
7H4907	H.3	
7H4918	H.3	
7H4944	E.2	
7H4944	M.1	
7H4970	E.3	
7H4973	E.3	
7H4973	H.3	
7H4976	E.2	
7H4976	M.1	
7H4989	H.3	
7H4990	H.3	
7H4997	H.3	
7H4998	H.3	
7H5000	N.2	
7H5002	N.2	
7H5004	N.2	
7H5005	N.2	
7H5006	N.2	
7H5007	N.2	
7H5008	N.2	
7H5009	N.2	
7H5010	N.2	
7H5011	N.2	
7H5012	N.2	
7H5013	N.2	
7H5021	N.1	
7H5025	N.1	
7H5066	N.3	
7H5067	N.3	
7H5111	N.9	
7H5121	N.9	
7H5122	N.9	
7H5123	N.9	
7H5128	N.3	
7H5130	N.13	
7H5138	N.11	
7H5138	N.12	
7H5139	N.11	
7H5139	N.12	
7H5140	N.11	
7H5142	N.11	
7H5142	N.12	
7H5143	N.11	
7H5143	N.12	
7H5156	N.2	
7H5182	N.9	
7H5182	N.10	
7H5185	N.9	
7H5202	N.10	
7H5339	N.2	
7H5468	N.12	
7H5469	N.11	
7H5469	N.12	
7H5471	N.12	
7H5474	N.12	
7H5483	N.5	
7H5498	N.2	
7H5512	N.12	
7H5522	N.3	
7H5525	N.1	
7H5528	N.1	
7H5540	N.3	
7H5582	N.5	
7H5582	N.6	
7H5582	N.7	
7H5582	N.8	
7H5820	F.19	
7H5820	F.20	
7H5822	F.18	
7H5825	F.18	
7H5827	F.18	
7H5829	F.18	
7H5830	F.18	
7H5831	F.18	
7H5832	F.18	
7H5833	F.18	
7H5834	F.22	
7H5836	F.19	
7H5836	F.20	
7H5837	F.19	
7H5837	F.20	
7H5838	F.19	
7H5839	F.19	
7H5840	F.19	
7H5841	F.19	
7H5842	F.20	
7H5843	F.20	
7H5844	F.20	
7H5845	F.19	
7H5846	F.19	
7H5849	F.19	
7H5851	F.18	
7H5852	F.18	
7H5856	F.20	
7H5857	F.20	
7H5860	F.19	
7H5861	F.21	
7H5862	F.21	
7H5863	F.21	
7H5866	F.21	
7H5867	F.21	
7H5868	F.21	
7H5870	F.21	
7H5872A	F.20	
7H5872B	F.20	
7H5872C	F.20	
7H5872D	F.20	

Part Number	Page	Amdt. Number
17H4755	E.2	
17H4755	M.1	
17H4827	E.2	
17H4827	M.1	
17H4827	M.8	
17H4831	M.2	
17H4814	K.3	
17H4815	K.3	
17H4813	E.2	
17H4896	M.8	
17H4897	M.8	
17H4898	M.8	
17H4899	M.8	
17H4900	M.8	
17H4908	M.7	
17H4910	M.7	
17H4913	M.7	
17H4914	M.7	
17H4915	M.7	
17H4917	M.7	
17H4929	M.7	
17H4930	M.7	
17H4931	M.7	
17H4937	M.7	
17H4946	M.3	
17H4950	M.7	
17H4951	M.7	
17H4952	M.7	
17H4958	K.4	
17H4959	K.4	
17H4960	K.4	
17H5065	B.1	
17H5069	B.1	
17H5095	B.1	
17H5110	B.1	
17H5113	B.1	
17H5117	B.1	
17H5145	N.5	
17H5158	B.1	
17H5166	B.1	
17H5205	N.5	
17H5205	N.6	
17H5205	N.7	
17H5214	N.7	
17H5230	N.7	
17H5231	N.5	
17H5231	N.6	
17H5231	N.7	
17H5243	B.1	
17H5255	N.13	
17H5259	N.12	
17H5273	N.7	
17H5277	N.7	
17H5306	N.5	
17H5375	N.7	
17H5384	B.1	
17H5394	N.5	
17H5394	N.6	
17H5394	N.7	
17H5396	N.13	
17H5423	B.1	
17H5427	N.9	
17H5431	N.13	
17H5434	N.1	
17H5437	B.1	
17H5441	N.13	
17H5442	N.13	
17H5469	B.1	
17H5475	N.13	
17H5531	B.1	
17H5546	N.7	
17H5594	N.11	
17H5804	F.21	
17H5808	F.19	
17H5809	F.19	
17H5811	F.18	
17H5815	F.18	
17H5815	F.19	
17H5818	F.22	
17H5819	F.22	
17H5821	F.22	
17H5822	F.22	
17H5823	F.21	
17H5824	F.21	
17H5825	F.18	
17H5827	F.19	
17H5833	F.19	
17H5844	F.21	
17H5846	F.21	
17H5847	F.19	
17H5848	F.19	
17H5849	F.19	
17H5854	F.22	
17H5855	F.22	
17H5856	F.18	
17H5857	F.19	
17H5858	F.19	
17H5859	F.21	
17H5860	F.18	
17H5861	F.21	
17H5862	F.18	
17H5863	F.22	
17H5864	F.21	
17H5865	F.21	
17H5866	F.18	
17H5867	F.21	
17H5869	F.21	
17H5872	F.20	
17H5873	F.19	
17H5874	F.19	
17H5875	F.18	
17H5877	F.20	
17H5878	F.20	
17H5879	F.20	
17H5977	F.19	
17H6103	J.1	
17H6103	J.5	
17H6106	J.1	
17H6106	J.5	
17H6107	J.1	
17H6108	J.1	
17H6109	J.1	
17H6110	J.1	
17H6155	J.5	
17H6161	J.5	
17H6162	J.5	
17H6163	J.5	
17H6164	J.5	
17H6536	J.5	
17H6542	J.1	
17H6543	J.1	
17H6544	J.5	
17H6545	J.5	
17H6679	A.4	
17H6681	A.4	
17H6836	R.45	
17H6865	B.1	
17H8108	R.45	
17H8112	E.2	
17H8112	M.1	
17H8112	M.2	
17H8113	E.2	
17H8113	M.1	
17H8146	R.41	
17H8147	R.41	
17H8148	R.41	
17H8153	J.1	
17H8153	J.5	
17H8659	J.2	
17H8844	B.1	
17H9391	N.13	
17H9699	R.20	
17H9700	R.20	
17H9701	R.20	
17H9702	R.20	
17H9932	R.42	
27H387	O.1	
27H387	O.2	
27H397	O.1	
27H397	O.2	
27H602	R.45	
27H611	R.44	
27H984	O.2	
27H985	O.2	
27H992	O.1	
27H1139	A.11	
27H1140	A.11	
27H1141	A.11	
27H1142	A.11	
27H1143	A.11	
27H1144	A.11	
27H1171	R.44	
27H1173	R.44	
27H1174	R.44	
27H1176	R.44	
27H1177	R.44	
27H1178	R.45	
27H1232	R.45	
27H1242	R.44	
27H1248	R.44	
27H1473	N.11	
27H1983	A.11	
27H2315	F.18	
27H2412	F.18	
27H2413	F.18	
27H2414	F.18	
27H2568	N.13	
27H3234	E.1	
27H5253	N.5	
27H5253	N.6	
27H5253	N.7	
27H5278	N.3	
27H5309	N.13	
27H5316	B.1	
27H5354	N.5	
27H5354	N.6	
27H5354	N.7	
27H5354	N.8	
27H5534	N.1	
27H5545	N.9	
27H5555	N.11	
27H5556	N.12	
27H5557	N.12	
27H5578	N.16	
27H9583	R.38	
27H9587	R.38	
27H9588	R.38	
27H9589	R.38	
27H9590	R.38	
27H9591	R.38	
27H9592	R.38	
27H9593	R.38	
27H9594	R.38	
27H9595	R.38	
27H9597	R.38	
27H9598	R.38	
27H9599	R.38	
27H9600	R.38	
27H9601	R.38	
27H9623	R.15	
27H9625	R.15	
27H9626	R.15	
27H9654	R.15	
27H9655	R.15	
27H9671	R.15	
27H9673	R.38	

Part Number	Page	Amdt. Number
27H9674	R.38	
27H9685	R.38	
27H9686	R.38	
27H9772	R.38	
27H9773	R.38	
27H9774	R.38	
27H9776	R.38	
27H9777	R.38	
27H9824	R.15	
27H9863	R.41	
27H9892	R.38	
27H9893	R.38	
27H9894	R.38	
27H9895	R.38	
37H140	A.11	
37H614	O.1	
37H1204	O.2	
37H1206	O.2	
37H1207	O.2	
37H5063	B.1	
37H5169	N.13	
37H5181	N.14	
37H5190	N.5	
37H5190	N.6	
37H5190	N.7	
37H5190	N.8	
37H5271	N.5	27H6713PAU/2894
37H5271	N.6	
37H5271	N.7	
37H5271	N.8	
37H5288	N.13	
37H5308	N.13	
37H5437	N.13	
37H5445	B.1	
37H5487	N.1	
37H5519	N.9	
37H5519	N.10	
37H5520	N.10	
37H5527	N.9	
37H5527	N.10	
37H5528	N.10	
37H5530	N.5	
37H5530	N.6	
37H5530	N.7	
37H5531	N.9	
37H5588	N.5	
37H9659	R.20	
37H9708	R.15	
37H9715	R.15	
37H9729	R.15	
37H9730	R.15	
37H9763	R.15	
37H9915	R.41	
37H9917	R.41	
37H9946	R.41	
37H9947	R.41	
37H9955	R.17	
37H9956	R.17	
37H9957	R.17	
37H9967	R.41	
37H9968	R.41	
37H9970	R.41	
37H9971	R.41	
37H9972	R.41	
37H9973	R.41	
37H9974	R.41	
47H5010	N.12	
47H5011	N.12	
47H5033	N.10	
47H5124	N.5	
47H5124	N.6	
47H5125	N.5	
47H5125	N.6	
47H5126	N.5	
47H5126	N.7	
47H5126	N.8	
47H5166	N.14	
47H5216	N.6	
47H5240	N.11	
47H5241	N.11	
47H5242	N.11	
47H5243	N.11	
47H5244	N.11	
47H5245	N.11	
47H5246	N.12	
47H5247	N.12	
47H5250	B.1	
47H5316	N.13	
47H5392	N.1	
47H5431	N.1	
47H5414	N.1	
47H5415	N.1	
47H5416	N.1	
47H5524	M.6	
47H5528	N.6	
47H5545	N.5	
47H5545	N.6	
47H5589	N.3	
47H9510	R.41	
57H5008	N.7	
57H5018	N.7	
57H5018	N.8	
57H5050	B.1	
57H5128	N.9	
57H5138	N.11	
57H5241	B.1	
57H5292	N.8	
57H5368	N.9	
57H5420	B.1	
57H5456	N.7	
57H5456	N.8	
57H5488	B.1	
57H5490	B.1	
67H5024	N.8	
67H5025	N.8	
67H5026	N.8	
67H5028	N.5	
67H5028	N.6	
67H5028	N.7	
67H5029	N.7	
97H510	R.24	
97H611	A.8	
97H2724	S.1	
97H2797	J.2	
HBN0510	A.5	
HBN0510	A.14	
HBN0510	F.2	
HBN0510	F.7	
HBN0512	F.2	
HBN0512	F.6	
HBN0512	F.10	
HBN0512	F.14	
HBN0515	F.6	
HBN0515	F.14	
HBN0518	F.1	
HBN0518	F.6	
HBN0518	F.10	
HBN0518	F.14	
HBN0522	F.2	
HBN0522	F.10	
HBN0611	F.5	
HBN0611	F.22	
HBN0612	F.5	
HBN0612	F.22	
HBZ0408	M.1	
HBZ0409	M.1	
HBZ0410	M.3	
HBZ0410	M.9	
HBZ0411	E.2	
HBZ0422	R.42	
HBZ0512	J.1	
HBZ0512	J.5	
HBZ0516	C.1	
HBZ0524	J.3	
HBZ0526	A.19	
HBZ0528	A.21	
HBZ0530	A.21	
HBZ0611	F.9	
HBZ0611	R.20	
HBZ0612	F.9	
HBZ0612	R.20	
HBZ0615	N.2	
HBZ0616	K.2	
HBZ0618	K.5	
HBZ0620	K.2	
HBZ0620	K.5	
HBZ0624	J.3	
HBZ0626	J.3	
HBZ0632	A.12	
HBZ0636	A.12	
HBZ0638	J.3	
HBZ0728	K.2	
HBZ0730	K.2	
HCN0631	A.12	
HCS116	D.16	
HCS168	R.43	
HCS168	R.45	
HCS368	R.43	
HCS368	R.45	
HCS507	R.45	
HCS709	D.18	
HCS913	D.16	
HCS1217	C.1	
HCS2228	D.1	
HNS0403	A.8	
HNS0404	A.14	
HNS0405	A.10	
HNS0406	A.9	
HNS0407	A.14	
HNS0407	A.9	
HNS0408	A.1	
HNS0503	A.4	
HNS0506	A.4	
HNS0506	A.5	
HNS0506	J.1	
HNS0506	J.2	
HNS0506	J.5	
HNS0506	J.6	
HNS0507	A.4	
HNS0507	A.5	
HNS0507	A.15	
HNS0508	F.9	
HNS0508	F.16	
HNS0509	A.14	
HNS0509	F.1	
HNS0509	F.6	
HNS0509	F.10	

PART NUMBER INDEX

Part Number	Page	Amdt. Number
HNS0509	F.14	
HNS0514	F.18	
HNS0607	E.1	
HNS0608	A.4	
HZS0403	M.3	
HZS0403	M.5	
HZS0403	N.15	
HZS0404	A.9	
HZS0404	A.27	
HZS0404	B.1	
HZS0404	D.5	
HZS0404	H.5	
HZS0404	M.3	
HZS0404	M.4	
HZS0404	N.4	
HZS0404	R.19	
HZS0405	A.22	
HZS0405	D.1	
HZS0405	D.2	
HZS0405	H.6	
HZS0405	K.5	
HZS0405	N.11	
HZS0405	R.6	
HZS0405	R.11	
HZS0405	R.19	
HZS0405	R.20	
HZS0405	R.24	
HZS0406	F.19	
HZS0406	M.4	
HZS0406	R.5	
HZS0406	R.7	
HZS0406	R.8	
HZS0406	R.16	
HZS0406	R.19	
HZS0407	R.9	
HZS0407	R.11	
HZS0408	B.3	
HZS0408	R.14	
HZS0409	A.24	
HZS0409	A.25	
HZS0410	R.14	
HZS0505	A.22	
HZS0505	C.1	
HZS0505	M.2	
HZS0505	R.12	
HZS0506	A.22	
HZS0506	A.23	
HZS0506	D.18	
HZS0506	J.3	
HZS0506	K.5	
HZS0506	M.4	
HZS0506	M.5	
HZS0506	M.8	
HZS0506	R.41	
HZS0507	A.23	
HZS0507	D.18	
HZS0508	A.24	
HZS0508	M.2	
HZS0508	R.7	
HZS0510	R.14	
HZS0604	N.16	
HZS0606	A.22	
HZS0606	M.8	
HZS0607	A.22	
HZS0607	A.23	
HZS0607	H.6	
HZS0608	E.3	
HZS0608	K.5	
HZS0608	R.20	
HZS0610	R.20	
IK21	B.2	
1K51	A.1	
IK105	A.9	
IK106	A.9	
IK141	A.10	
IK204	B.3	
IK369	A.3	
IK372	A.7	
IK618	A.23	
IK756	A.13	
IK756	A.17	
IK759	A.13	
IK759	A.17	
IK800	A.7	
IK1056	A.8	
IK1056	A.16	
IK1754	F.1	
IK1754	F.10	
IK3055	F.7	
IK3055	F.11	
IK3055	F.15	
2K1343	F.6	
2K1345	F.2	
2K1369	O.1	
2K1369	O.2	
2K1381	N.4	
2K2163	A.14	
2K2163	B.2	
2K2561	A.7	
2K4909	F.4	
2K4909	F.13	
2K4936	R.37	
2K4954	A.1	
2K4954	A.16	
2K4954	C.1	
2K4958	A.13	
2K4958	A.17	
2K4970	B.2	
2K4974	A.13	
2K4974	K.1	
2K4975	C.1	
2K5197	A.5	
2K5197	A.9	
2K5213	M.5	
2K5215	D.2	
2K5215	O.1	
2K5217	M.4	
2K5218	M.4	
2K5221	M.5	
2K5243	M.6	
2K5291	M.6	
2K5319	A.4	
2K5319	A.14	
2K5505	F.2	
2K5505	F.6	
2K5507	F.21	
2K5616	M.5	
2K5622	E.3	
2K5914	G.1	
2K5923	A.8	
2K6057	J.1	
2K6062	A.1	
2K6167	N.16	
2K6192	A.19	
2K6192	B.3	
2K6193	A.19	
2K6193	B.3	
2K6534	A.7	
2K6541	H.1	
2K6650	A.1	
2K6842	H.6	
2K6842	K.5	
2K6930	M.6	
2K7056	A.13	
2K7440	A.5	
2K7500	F.5	
2K7500	F.9	
2K7552	A.6	
2K7914	F.11	
2K7914	F.14	
2K8160	A.7	
2K8209	J.3	
2K8377	A.10	
2K8645	N.1	
2K8725	A.3	
2K8910	D.1	
2K8929	J.1	
2K8951	K.1	
2K9005	R.7	
2K9051	R.7	
2K9579	R.42	
2K9798	R.36	
2K9799	F.1	
2K9799	F.10	
2K9993	R.7	
2K9993	R.8	
6K35	E.3	
6K35	M.4	
6K35	O.1	
6K56	B.2	
6K431	A.10	
6K432	F.1	
6K432	F.2	
6K432	F.10	
6K432	F.11	
6K433	A.8	
6K433	A.18	
6K467	A.24	
6K499	F.1	
6K499	F.6	
6K499	F.10	
6K499	F.14	
6K499	H.1	
6K638	D.1	
6K639	A.9	
6K639	B.3	
6K650	B.3	
6K681	F.2	
6K681	F.7	
6K681	F.11	
6K681	F.15	
6K777	F.2	
6K777	F.7	
6K777	F.11	
6K777	F.14	
6K780	F.2	
6K780	F.7	
6K780	F.11	
6K780	F.14	
6K803	A.13	
6K803	A.17	
6K9426	R.13	
6K9433	R.45	
6K9582	K.5	
6K9817	R.7	
6K9817	R.8	
6K9817	R.25	
6K9817	R.45	
6K9818	R.7	
6K9829	F.1	
6K9829	F.10	
10K5451	M.4	
10K7089	F.1	
10K7089	F.6	
10K7089	F.10	
10K7089	F.14	
11K399	A.8	
11K3055	F.2	
11K8309	M.8	

Part Number	Page	Amdt. Number
11K9095	N.14	
11K9181	N.15	
41K5011	M.3	
51K320	J.4	
51K365	J.4	
51K370	J.3	
51K490	A.8	
51K505	F.18	
51K562	A.19	
51K562	A.21	
51K590	A.7	
51K591	A.7	
52K2614	R.40	
53K122	R.16	
53K124	R.36	
53K126	F.19	
53K128	A.26	
53K129	N.4	
53K155	R.43	
53K155	R.44	
53K165	D.1	
53K329	K.1	
53K329	K.6	
53K330	K.2	
53K365	J.4	
53K462	F.1	
53K462	F.10	
53K485	A.1	
53K507	A.18	
53K507	A.20	
53K563	A.19	
53K563	A.21	
53K564	A.18	
53K564	A.20	
53K1023	A.27	
53K1025	L.1	
53K1048	G.1	
53K1048	L.1	
53K1191	R.16	
53K1302	R.44	
53K1393	H.6	
53K1433	A.13	
53K1435	F.1	
53K1435	F.6	
53K1435	F.10	
53K1435	F.14	
53K1452	A.13	
53K1551	J.3	
53K1661	R.13	
53K1662	K.1	
53K1662	R.13	
53K1712	R.16	
53K1764	K.1	
53K1770	K.1	
53K1770	K.6	
53K3061	D.1	
53K3151	R.31	
53K3216	N.16	
53K3495	R.16	
54K195	R.14	
54K1723	F.5	
54K1723	F.9	
54K1723	F.13	
54K1723	F.17	
54K2995	R.33	
54K3024	R.25	
54K3177	R.36	
54K3215	R.33	
54K3413	R.17	
5L321	N.9	
LNN208	A.1	
LNZ104	R.39	
LNZ105	A.23	
LNZ105	K.5	
LNZ205	A.23	
LNZ205	M.1	
LNZ206	A.14	
LNZ206	G.1	
LNZ206	H.3	
LNZ206	H.5	
LNZ206	K.5	
LNZ206	N.1	
LNZ305	K.5	
LWN203	F.19	
LWN203	F.20	
LWN204	A.8	
LWN204	A.9	
LWN204	A.10	
LWN204	A.14	
LWN204	F.1	
LWN204	F.6	
LWN204	F.10	
LWN204	F.14	
LWN205	A.1	
LWN205	A.4	
LWN205	A.8	
LWN205	A.10	
LWN205	A.14	
LWN205	A.15	
LWN205	F.1	
LWN205	F.2	
LWN205	F.3	
LWN205	F.6	
LWN205	F.7	
LWN205	F.9	
LWN205	F.10	
LWN205	F.12	
LWN205	F.14	
LWN205	F.16	
LWN205	F.18	
LWN206	A.4	
LWN206	A.8	
LWN206	E.1	
LWN206	F.5	
LWN206	F.22	
LWN206	H.3	
LWN207	A.13	
LWN207	A.14	
LWN305	A.4	
LWN305	F.8	
LWN305	F.15	
LWN307	A.17	
LWN403	D.3	
LWN403	D.6	
LWN403	D.7	
LWN403	D.8	
LWN403	D.10	
LWN403	D.11	
LWN403	R.13	
LWN403	R.16	
LWN403	R.18	
LWN406	A.6	
LWN406	A.22	
LWN406	E.3	
LWN406	M.4	
LWN406	R.15	
LWZ106	L.1	
LWZ107	L.1	
LWZ202	N.9	
LWZ202	R.24	
LWZ203	A.25	
LWZ203	A.26	
LWZ203	A.27	
LWZ203	D.2	
LWZ203	E.3	
LWZ203	F.19	
LWZ203	M.3	
LWZ203	M.6	
LWZ203	N.3	
LWZ203	N.4	
LWZ203	N.8	
LWZ203	N.11	
LWZ203	N.14	
LWZ203	N.15	
LWZ203	N.16	
LWZ203	R.5	
LWZ203	R.6	
LWZ203	R.7	
LWZ203	R.8	
LWZ203	R.9	
LWZ203	R.11	
LWZ203	R.16	
LWZ203	R.17	
LWZ203	R.19	
LWZ203	R.23	
LWZ203	R.24	
LWZ203	R.25	
LWZ203	R.28	
LWZ203	R.32	
LWZ203	R.33	
LWZ203	R.36	
LWZ203	R.37	
LWZ203	R.39	
LWZ203	R.40	
LWZ203	R.43	
LWZ203	R.45	
LWZ204	A.27	
LWZ204	B.1	
LWZ204	B.3	
LWZ204	D.1	
LWZ204	D.2	
LWZ204	D.5	
LWZ204	F.1	
LWZ204	F.10	
LWZ204	F.19	
LWZ204	H.5	
LWZ204	K.1	
LWZ204	K.6	
LWZ204	M.3	
LWZ204	M.4	
LWZ204	M.5	
LWZ204	N.3	
LWZ204	N.4	
LWZ204	N.11	
LWZ204	N.15	
LWZ204	R.5	
LWZ204	R.6	
LWZ204	R.7	
LWZ204	R.8	
LWZ204	R.11	
LWZ204	R.13	
LWZ204	R.14	
LWZ204	R.19	
LWZ204	R.22	
LWZ204	R.24	
LWZ204	R.25	

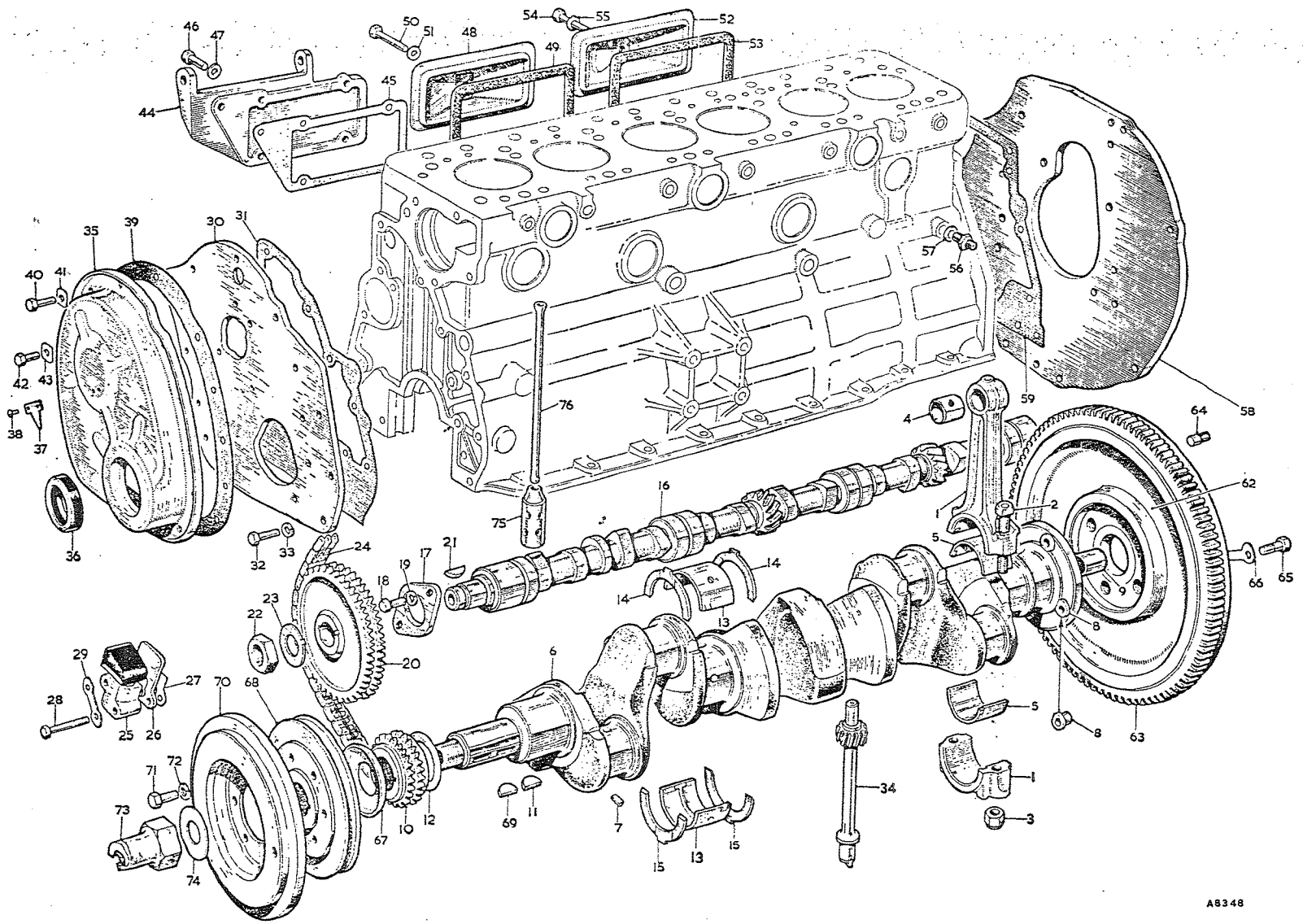

To face page A.6

Item No.	DESCRIPTION	Commencing (E) 29D-H101 Part Number	Illus. No.	Quantity	MODIFICATIONS New Part Number	Change Point	REMARKS
	REAR ENGINE MOUNTING PLATE						
1	**Plate—engine mounting—rear**	**AEC474**	**58**	**1**			
2	Joint—plate	AEC128	59	1			
3	Bolt—plate to block	AEC478	60	11			
4	Washer—shakeproof—bolt	LWN406	61	11			Part No. change; was LWN606
	FLYWHEEL						
5	**Flywheel complete**	**AEC885**	**62**	**1**	22B136	Com (E) 29E-H4879 (PAU 2242)	
6	Ring—starter	1B1714	63	1			
7	Dowel—clutch to flywheel	1D1960	64	2/3	AEC2037	Com. (E) 29D-H25473	AEA420 (E) 29F-H4579 (PAU 2242)
8	Bolt—flywheel to crankshaft	AEC265	65	4			
9	Washer—lock—bolt	2K7552	66	2			
	CRANKSHAFT OIL THROWER—PULLEY—DAMPER—STARTING NUT						
10	**Thrower—oil**	**1G838**	**67**	**1**			
11	**Pulley—crankshaft**	**AEC290**	**68**	**1**			
12	Key—pulley	WKN608	69	1			Part No. change; was 2K5578
13	**Damper—crankshaft**	**AEC183**	**70**	**1**			
14	Screw—damper to pulley	NCS0606	71	6			
15	Washer—spring—screw	LWZ206	72	6			
16	**Nut—starting**	**AEC448**	**73**	**1**			
17	Washer—nut	2H731	74	1	12B681	(E) 29F-H3386 (2098)	
	TAPPETS AND PUSH RODS						
18	**Tappet**	**AEC264**	**75**	**12**			
19	Tappet—·010″ (·254 mm.) O/S	AEC026410	75	A/R			
20	Tappet—·020″ (·508 mm.) O/S	AEC026420	75	A/R			
21	**Push rod**	**AEC150**	**76**	**12**			] **Alternatives**
22	**Push rod**	**AEC2015**	**76**	**12**			

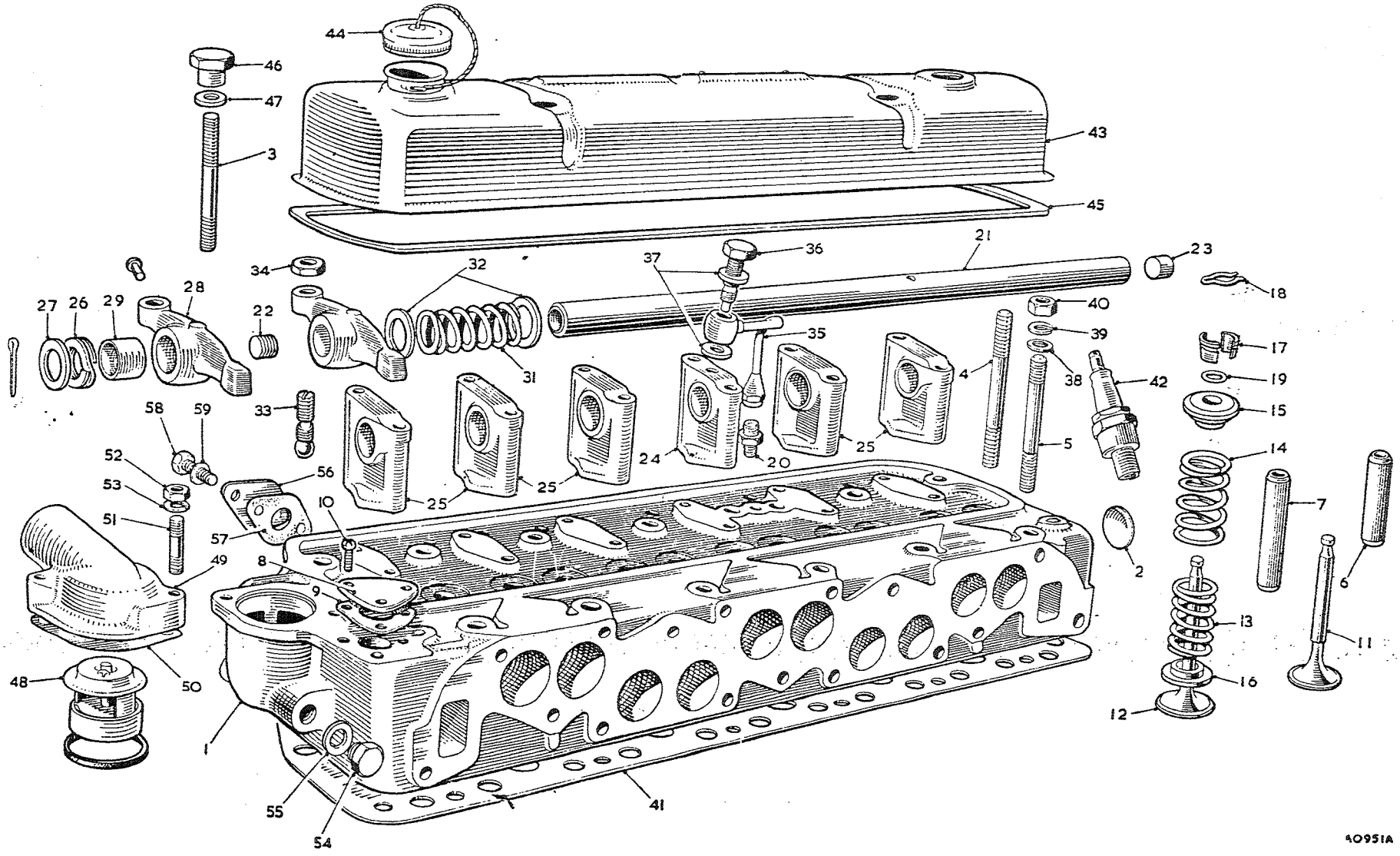
44
46
47
3
43
45
21
23
18
34
32
37
36
40
39
17
19
15
14
7
6
11
13
16
12
2
27
26
29
28
22
31
35
4
38
42
5
58
59
33
52
53
51
56
57
10
8
9
49
50
48
1
55
54
41
24
20
25
25
25
25
40951A

Item No.	DESCRIPTION	Commencing (E) 29D-H101 Part Number	Illus. No.	Quantity	MODIFICATIONS New Part Number	MODIFICATIONS Change Point	REMARKS
	CYLINDER FRONT AND SIDE COVERS						
1	**Cover—front**	**AEC1011**	35	1			
2	Seal—oil	AEC621	36	1			
3	Pointer—timing	AEC348	37	1			
4	Pivet—pointer	AEC349	38	2			
5	Joint—front cover	AEC202	39	1			
6	Screw—cover to mounting plate (long)	HNS0507	40	7			
7	Washer—screw	2K7440	41	7			
8	Screw—cover to mounting plate (short)	HNS0403	42	5			
9	Washer—screw	2K5197	43	5			
10	Cover—cylinder side—front	AEC689	44	1			
11	Joint—cover	AEC313	45	1			
12	Screw—cover to crankcase	HNS0506	46	5			
13	Washer—screw	AEC345	47	5			
14	Cover—cylinder side—centre	2A770	48	1	12H941	com(E) 29F-43954 (2093)	
15	Joint—cover	1A2203	49	1	12A24		1A2203 not available; use 12A24
16	Bolt—cover to crankcase	HBN0510	50	1			
17	Washer—bolt	AEC461	51	1			
18	Cover—cylinder side—rear	AEC436	52	1			] Alternatives
19	Cover—cylinder side—rear	AEC993	52	1	12B682		AEC993 not available; use 12B682
20	Joint—cover	1A2203	53	1	12A24		1A2203 not available; use 12A24
21	Bolt—cover to crankcase	HBN0510	54	1			
22	Washer—bolt	AEC461	55	1			
	OIL PIPE UNION						
23	Union—oil gauge pipe	1G1814	56	1			
24	Washer—union	AEC787	57	1			

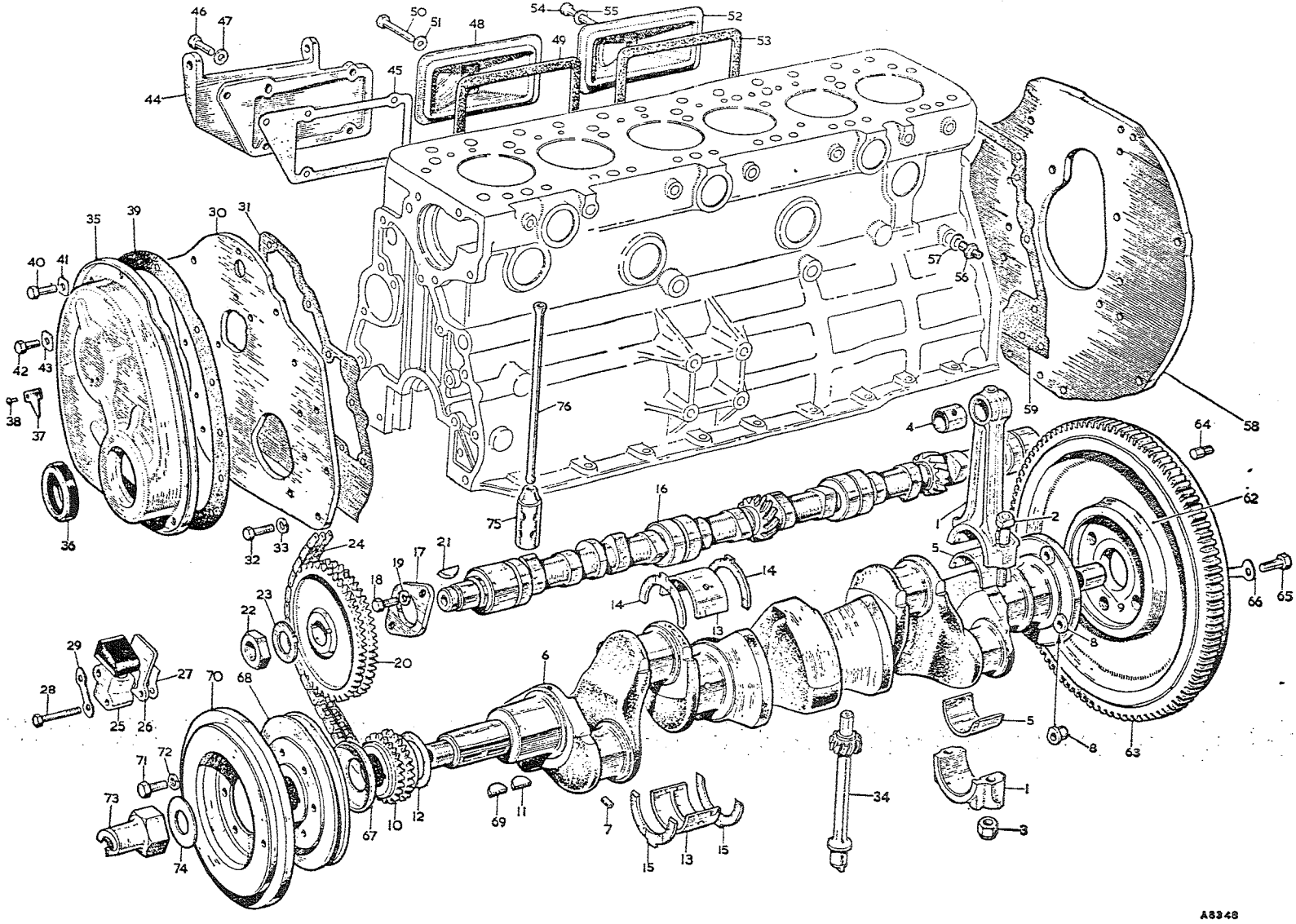

To face page A.5

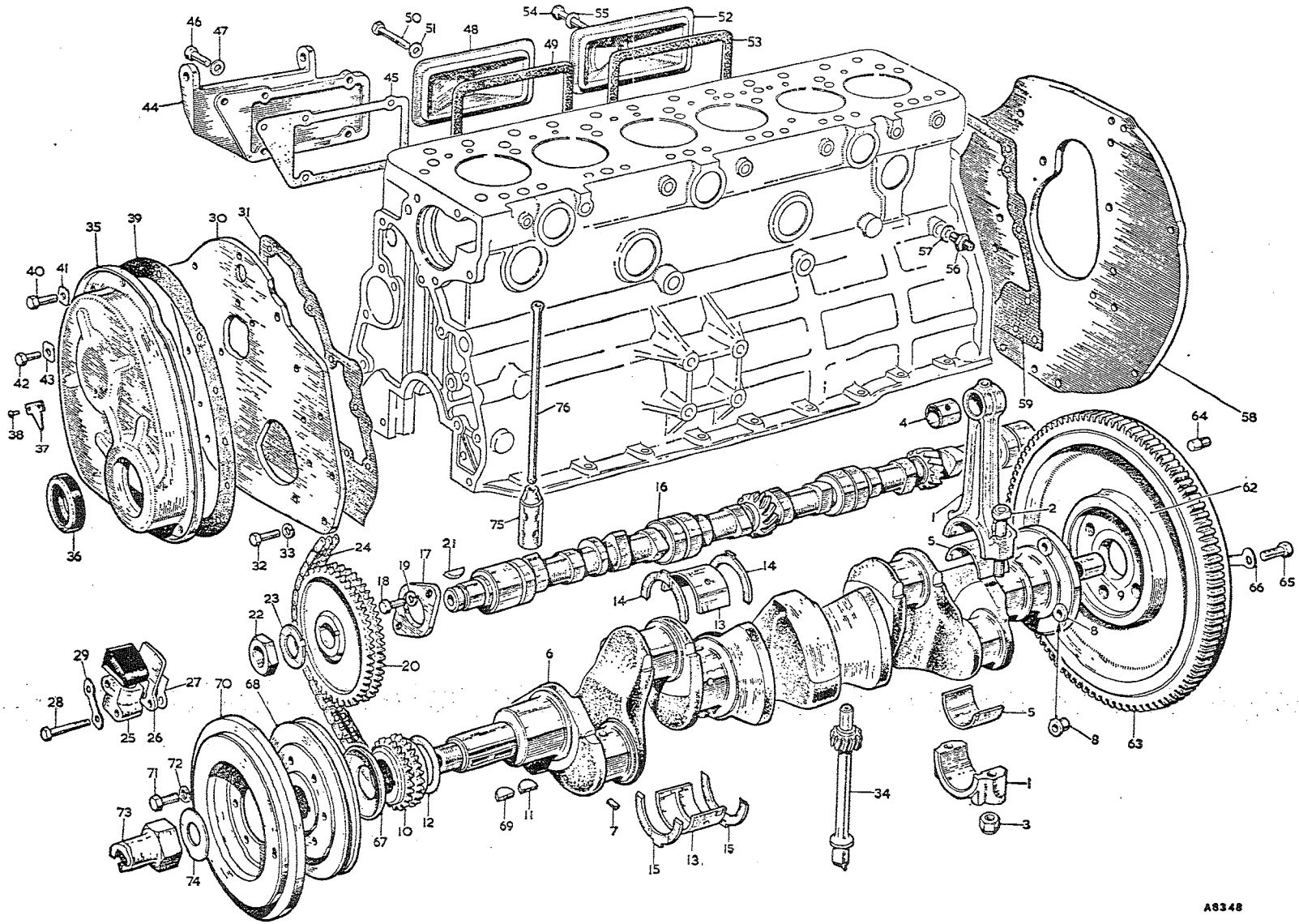

To face page A.4

Item No.	DESCRIPTION	Commencing (E) 29D-H101 Part Number	Illus. No.	Quantity	MODIFICATIONS New Part Number	MODIFICATIONS Change Point	REMARKS
	CAMSHAFT—GEAR						
1	Camshaft	AEC828	16	1	AEC2029 12B594	Com. (E) 29E-H101	For AEC2029 use 12B594 together with 12 off outer valve spring 6K873 for this application
2	Plate—locating	AEC810	17	1			
3	Screw—plate to crankcase	HNS0507	18	2			
4	Washer—spring—screw	LWN205	19	2			
5	Gear—camshaft	AEC482	20	1			
6	Key—gear	WKN606	21	1			
7	Nut—gear	AEC247	22	1			
8	Washer—lock—nut	1B1219	23	1			
9	Chain—camshaft drive	AEC191	24	1			
10	**Tensioner—chain**	**17H342**	25	1			
11	Tensioner	17H6681		1			
12	Key	17H6679		1			
13	Slipper head assembly	17H31		1			
14	Backplate—tensioner	AJC5033	26	1			
15	Joint—tensioner	AEC339	27	1			
16	Bolt—tensioner to block	AEC193	28	2			
17	Washer—lock—bolt	AEC340	29	1			
18	Damper—chain			1	AEC2030	Com. (E) 29E-H101	
19	Screw—damper to block			1	HNS0608		
20	Washer—plain—screw			1	PWN106		
21	Washer—spring—screw			1	LWN206		
	ENGINE FRONT MOUNTING PLATE						
22	Plate—engine mounting—front	AEC336	30	1	AEC2032	Com. (E) 29E-H101	
23	Joint—mounting plate to crankcase	AEC337	31	1	AEC2033		
24	Screw—plate to crankcase	HNS0506	32	6			
25	Washer—spring—screw	2K5319	33	6	LWN305		2K5319 not available; use LWN305
	OIL PUMP SPINDLE						
26	Spindle—driving—oil pump	AEC829	34	1			

Item No.	DESCRIPTION	Commencing (E) 29D-H101 Part Number	Illus. No.	Quantity	MODIFICATIONS New Part Number	MODIFICATIONS Change Point	REMARKS
	CONNECTING RODS—BEARINGS						
1	**Connecting rod and cap**	**8G2339**	1	**1 set**			**Was 6 off AEC1092**
2	Bolt—cap	AEC268	2	12	AEC2097	Com. (E) 29E-H929	
3	Nut—bolt	AEC328	3	12	[illegible]		
4	Bush—small end	AEC882	4	6			
5	Bearing—connecting rod—standard	AJC5159	5	1 set			
6	Bearing—connecting rod—·010″ (·254 mm.) U/S	AJC515910	5	1 set			
7	Bearing—connecting rod—·020″ (·508 mm.) U/S	AJC515920	5	1 set			
8	Bearing—connecting rod—·030″ (·762 mm.) U/S	AJC515930	5	1 set			
9	Bearing—connecting rod—·040″ (1·016 mm.) U/S	AJC515940	5	1 set			
	CRANKSHAFT—GEAR						
10	**Crankshaft**	**AEC28**	6	1			
11	Restrictor	1B1033	7	6			
12	Nut—flywheel bolt	AEC179	8	4	AEC2040	Com. (E) 29D-H25693	AEC179 not available: use AEC2040
13	Bush—drive gear	1K369	9	1			
14	Gear—crankshaft	AEC180	10	1	AEC2026	Com. (E) 29D-H20455	AEC180 not available; use AEC2026
15	Key—gear	WKN608	11	1			Part No. change; was 2K5578
16	Washer—packing	2K8725	12	A/R			
17	Bearing—main—standard	8G 2121	13	1 set	8G2287 8G2360	Com. (E) 29D-H663	For 8G2121 use 8G2360 for this application. 8G2287 not available; use 8G2360
18	Bearing—main—·010″ (·254 mm.) U/S	8G212110	13	1 set	8G228710	Com. (E) 29D-H663	For 8G212110/20/30/40 use 8G228710/20/30/40 for this application
19	Bearing—main—·020″ (·508 mm.) U/S	8G212120	13	1 set	8G228720		
20	Bearing—main—·030″ (·762 mm.) U/S	8G212130	13	1 set	8G228730		
21	Bearing—main—·040″ (1·016 mm.) U/S	8G212140	13	1 set	8G228740		
22	Washer—thrust—upper—standard	AEC278	14	A/R			
23	Washer—thrust—upper—·0025″ (·0635 mm.) O/S	AEC332	14	A/R			
24	Washer—thrust—upper—·005″ (·127 mm.) O/S	AEC744	14	A/R			
25	Washer—thrust—upper—·0075″ (·190 mm.) O/S	AEC746	14	A/R			
26	Washer—thrust—upper—·010″ (·254 mm.) O/S	AEC748	14	A/R			
27	Washer—thrust—lower—standard	AEC279	15	A/R			
28	Washer—thrust—lower—·0025″ (·0635 mm.) O/S	AEC333	15	A/R			
29	Washer—thrust—lower—·005″ (·127 mm.) O/S	AEC745	15	A/R			
30	Washer—thrust—lower—·0075″ (·190 mm.) O/S	AEC747	15	A/R			
31	Washer—thrust—lower—·010″ (·254 mm.) O/S	AEC749	15	A/R			

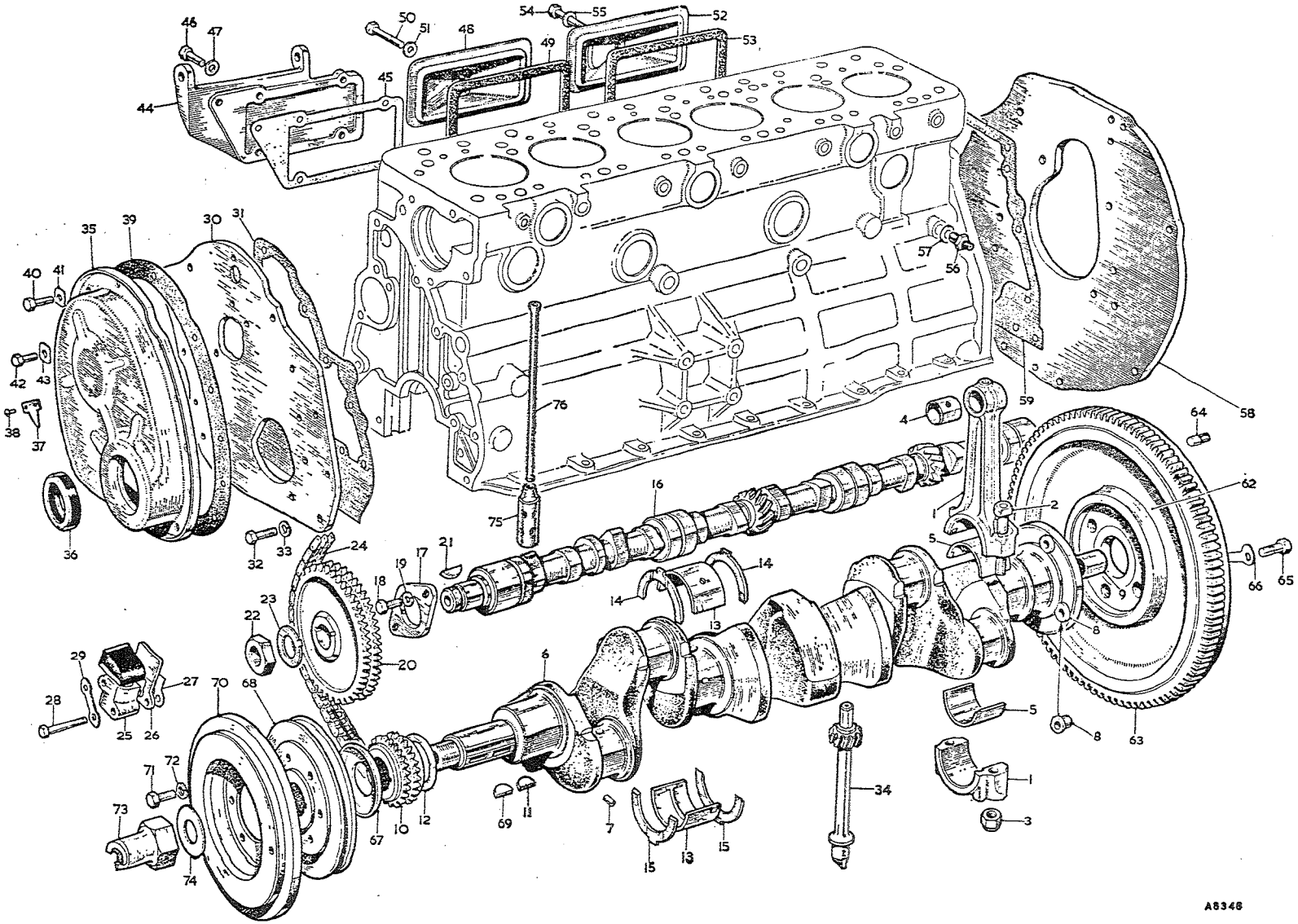

To face page A.3

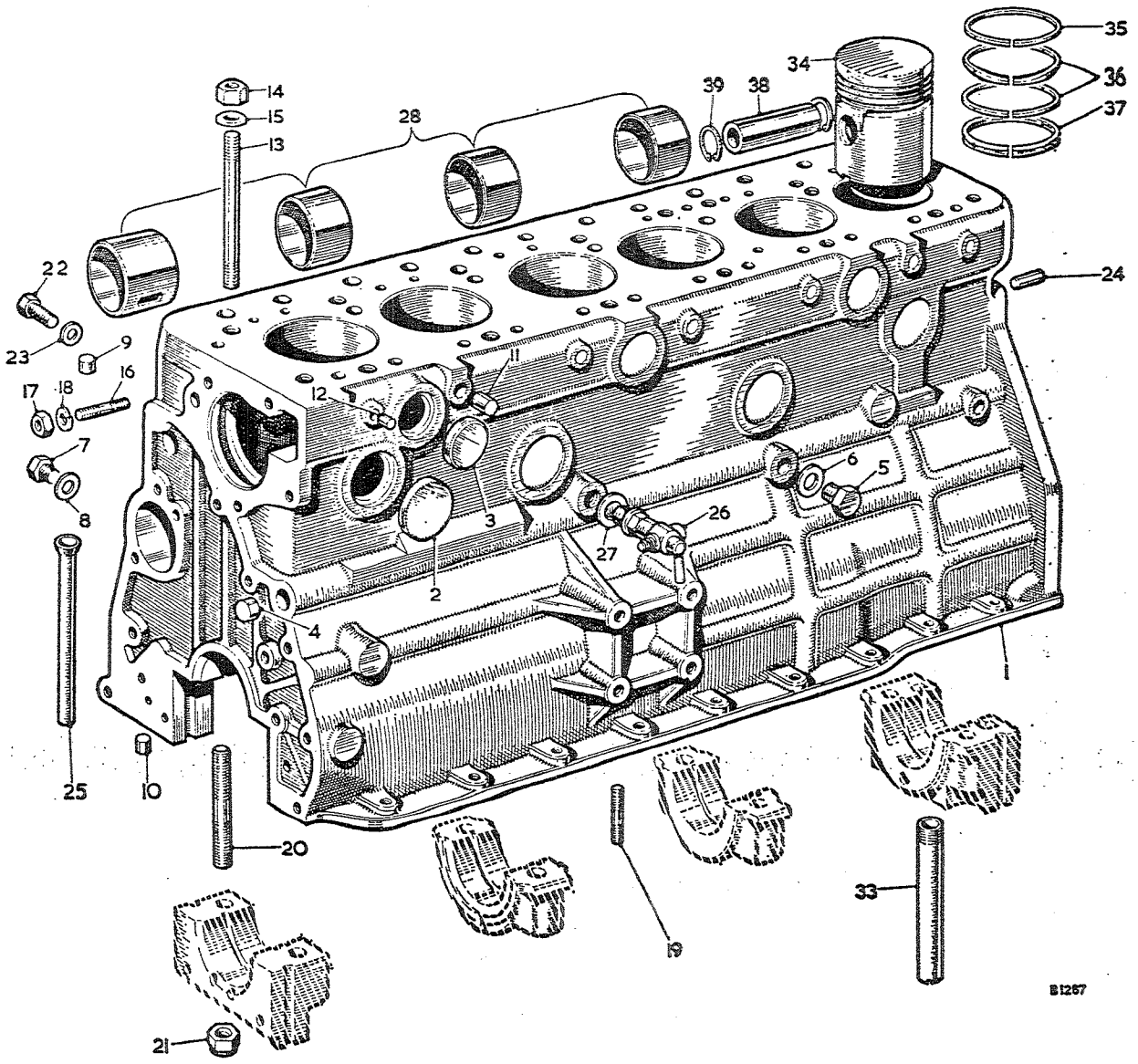

To face page A.2

Item No.	DESCRIPTION	Commencing (E) 29D-H101 Part Number	Illus. No.	Quantity	MODIFICATIONS New Part Number	MODIFICATIONS Change Point	REMARKS
	Engine Unit—*continued*						
1	**Piston assembly—standard—grade 3**	**AEG133703**	34	6			
2	**Piston assembly—standard—grade 6**	**AEG133706**	34	6			
3	**Piston assembly—·010″ (·254 mm.) O/S—grade 3**	**AEG133713**	34	6			
4	**Piston assembly—·010″ (·254 mm.) O/S—grade 6**	**AEG133716**	34	6			
5	**Piston assembly—·020″ (·508 mm.) O/S—grade 3**	**AEG133723**	34	6			
6	**Piston assembly—·020″ (·508 mm.) O/S—grade 6**	**AEG133726**	34	6			
7	**Piston assembly—·030″ (·762 mm.) O/S—grade 3**	**AEG133733**	34	6			
8	**Piston assembly—·030″ (·762 mm.) O/S—grade 6**	**AEG133736**	34	6			
9	**Piston assembly—·040″ (1·016 mm.) O/S—grade 3**	**AEG133743**	34	6			
10	**Piston assembly—·040″ (1·016 mm.) O/S—grade 6**	**AEG133746**	34	6			
11	Ring—compression—standard	AEC906	35	6			
12	Ring—compression—·010″ (·254 mm.) O/S	AEC090610	35	6			
13	Ring—compression—·020″ (·508 mm.) O/S	AEC090620	35	6			
14	Ring—compression—·030″ (·762 mm.) O/S	AEC090630	35	6			
15	Ring—compression—·040″ (1·016 mm) O/S	AEC090640	35	6			
16	Ring—compression—taper—standard	AEC907	36	12			
17	Ring—compression—taper—·010″ (·254 mm.) O/S	AEC090710	36	12			
18	Ring—compression—taper—·020 (·508 mm.) O/S	AEC090720	36	12			
19	Ring—compression—taper—·030″ (·762 mm.) O/S	AEC090730	36	12			
20	Ring—compression—taper—·040″ (1·016 mm.) O/S	AEC090740	36	12			
21	Ring—scraper—standard	AEC908	37	6			
22	Ring—scraper—·010″ (·254 mm.) O/S	AEC090810	37	6			
23	Ring—scraper—·020″ (·508 mm.) O/S	AEC090820	37	6			
24	Ring—scraper—·030″ (·762 mm.) O/S	AEC090830	37	6			
25	Ring—scraper—·040″ (1·016 mm.) O/S	AEC090840	37	6			
26	Pin—gudgeon	AEC905	38	6			
27	Circlip	CCN214	39	12			Part No. change; was AEC785

To facilitate the ordering of pistons the grade has been included in the part number and it is important that the new part number is always quoted.

ENGINE

ENGINE UNIT

Item No.	DESCRIPTION	Commencing (E) 29D-H101 Part Number	Illus. No.	Quantity	MODIFICATIONS New Part Number	MODIFICATIONS Change Point	REMARKS
1	**Stripped engine unit**	**AEC1347**		1	**AEC2006**	**Com. (E) 29D-H2864**	
2	**Half engine unit**				**AEC1489**	**Com. (E) 29E-H101**	
3	**Block assembly—cylinder**	**AEC1352**		1	**AEC1490**	**Com. (E) 29E-H101**	
4	Plug—core hole (large)	**AEC1353**	1	1			
5	Plug—core hole (small)	AEH592	2	5			
6	Plug—oil gallery	AEC876	3	4			
7	Plug—oil filter feed hole	8G507	4	2			
8	Washer—plug	AEC110	5	1			
9	Plug—oil pump feed hole	AEC343	6	1			
10	Washer—plug	HNS0503	7	2			
11	Plug—oil pump boss	AEC398	8	2			
12	Plug—oil tensioner feed hole	2K6062	9	1			
13	Plug—water gallery (large)	2K6650	10	1			
14	Plug—water gallery (small)	2K1358	11	5			
15	Stud—cylinder head	2K6650	12	2			
16	Nut—stud	AEC604	13	16			
17	Washer—stud	AEC139	14	16			
18	Stud—water pump	PWN107	15	16			
19	Nut—stud	53K485	16	4			
20	Washer—spring—stud	FNN105	17	4			
21	Stud—oil pump	LWN205	18	4			
22	Stud—main bearing cap	AEC341	19	3			
23	Locknut—stud	AEC872	20	8			
24	Screw—blanking—fuel pump flange	LNN208	21	8			
25	Washer—screw (copper)	ZCS0505	22	2			
26	Dowel—rear plate to block	AEC398	23	4			
27	Tube—oil level indicator	1K51	24	2			
28	Tap—water drain	AEC672	25	1			
29	Washer—tap (fibre)	3H2502	26	1			
30	Liner—camshaft	2K4954	27	1			
31	Cap—main bearing (front)	AJC6042	28	1 set			
32	Cap—main bearing (No. 2)	NSP		1			
33	Cap—main bearing (No. 3)	NSP		1			
34	Cap—main bearing (rear)	NSP		1			
35	Tube—drain	NSP		1			
		AEC853	33	1			

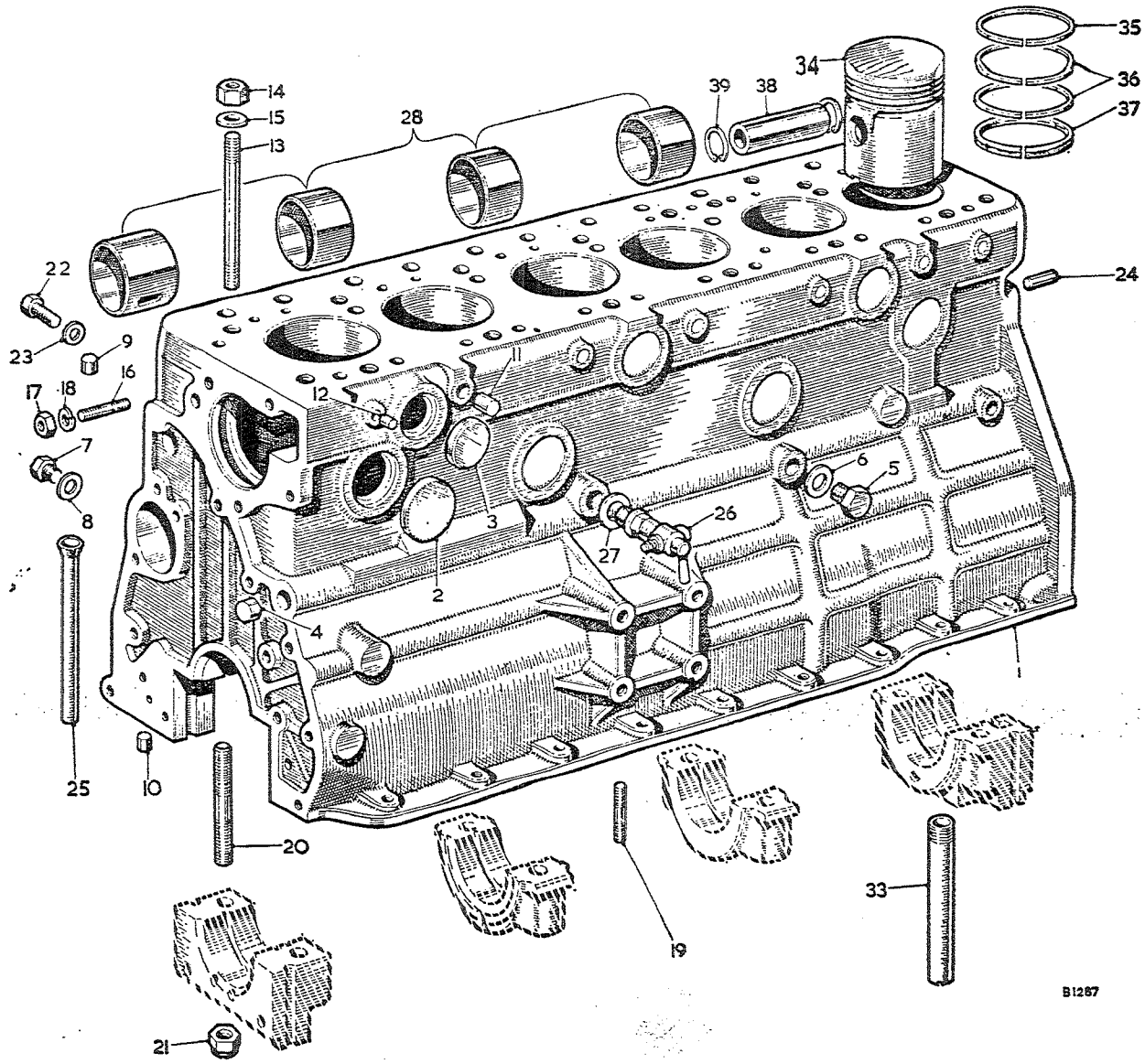

To face page A.1

Part Number	Page	Amdt. Number
PWN112	J.2	
PWN112	J.6	
PWP203	R.40	
PWZ102	N.4	
PWZ102	N.9	
PWZ102	N.10	
PWZ102	R.24	
PWZ103	N.4	
PWZ103	R.5	
PWZ103	R.6	
PWZ103	R.7	
PWZ103	R.8	
PWZ103	R.9	
PWZ103	R.11	
PWZ103	R.16	
PWZ103	R.17	
PWZ103	R.18	
PWZ103	R.19	
PWZ103	R.23	
PWZ103	R.24	
PWZ103	R.25	
PWZ103	R.28	
PWZ103	R.32	
PWZ103	R.33	
PWZ103	R.36	
PWZ103	R.37	
PWZ103	R.40	
PWZ103	R.43	
PWZ103	R.45	
PWZ104	A.24	
PWZ104	A.25	
PWZ104	A.27	
PWZ104	B.1	
PWZ104	D.1	
PWZ104	D.5	
PWZ104	N.3	
PWZ104	N.4	
PWZ104	R.5	
PWZ104	R.6	
PWZ104	R.7	
PWZ104	R.8	
PWZ104	R.11	
PWZ104	R.13	
PWZ104	R.14	
PWZ104	R.16	
PWZ104	R.19	
PWZ104	R.24	
PWZ104	R.25	
PWZ104	R.40	
PWZ104	R.42	
PWZ105	A.18	
PWZ105	A.19	
PWZ105	A.20	
PWZ105	A.21	
PWZ105	A.22	
PWZ105	A.26	
PWZ105	C.1	
PWZ105	D.18	
PWZ105	E.3	
PWZ105	F.18	
PWZ105	M.5	
PWZ105	N.1	
PWZ105	R.5	
PWZ105	R.12	
PWZ105	R.13	
PWZ105	R.42	
PWZ106	A.14	
PWZ106	A.18	
PWZ106	A.19	
PWZ106	A.20	
PWZ106	A.21	
PWZ106	A.22	
PWZ106	A.25	
PWZ106	K.4	
PWZ106	K.5	
PWZ106	L.1	
PWZ106	R.14	
PWZ106	R.20	
PWZ106	R.22	
PWZ107	A.1	
PWZ107	H.5	
PWZ112	J.3	
PWZ202	R.5	
PWZ	A.27	
PWZ	R.6	
PWZ20	R.8	
PWZ203	R.11	
PWZ204	B.3	
PWZ204	H.5	
PWZ204	M.5	
PWZ204	R.14	
PWZ204	R.19	
PWZ204	R.22	
PWZ204	R.40	
PWZ205	A.23	
PWZ205	C.1	
PWZ205	M.2	
PWZ205	M.8	
PWZ205	R.41	
PWZ206	A.22	
PWZ206	H.6	
PWZ207	K.5	
RFN204	R.42	
RFN303	N.14	
RFN403	A.27	
RFN403	O.1	
RFN403	R.11	
RFN403	R.42	
RFN405	N.14	
RFN405	N.15	
RFN405	O.2	
RFR106	D.2	
RFR205	R.42	
RFR207	R.42	
RFR208	R.42	
RFR210	R.42	
RFR216	R.42	
RFR220	R.10	
RMP0310	R.42	
RPP0312	R.41	
RJP604	R.17	
RJP604	R.28	
RJP604	R.29	
RJP604	R.31	
RJP605	R.31	
RJP606	R.22	
RJP606	R.29	
RJP1005	R.25	
RJZ603	R.37	
RMP0308	R.16	
RMP0308	R.32	
RMP0310	R.16	
RMP0310	R.17	
RMP0310	R.32	
RMP0312	R.16	
RMP0416	R.14	
RMZ0310	R.7	
RPP0310	R.17	
RPP0312	R.25	
RPW606	R.33	
RPZ0310	N.8	
RTP604	R.34	
RTP606	R.30	
RTP806	R.25	
RWP605	R.29	
TFP1006	R.37	
TFP1010	R.30	
TFS106	R.35	
TFS106	R.37	
TPS0405	F.18	
TPS0610	F.1	
TPS0610	F.6	
TPS0610	F.10	
TPS0610	F.14	
TPS0710	A.13	
UHN305	M.5	
UHN400	J.4	
UHN490	K.1	
UHN490	M.5	
WKN305	F.5	
WKN305	F.9	
WKN404	A.17	
WKN404	F.9	
WKN404	F.17	
WKN405	A.9	
WKN405	N.1	
WKN606	A.4	
WKN608	A.3	
WKN608	A.6	
WNZ104	N.1	
X19546	C.1	
ZCS0505	A.1	
ZCS0505	A.26	
ZPS0204	R.11	
ZPS0306	D.1	

Part Number	Page	Amdt. Number
LWZ204	R.40	
LWZ204	R.42	
LWZ205	A.18	
LWZ205	A.19	
LWZ205	A.20	
LWZ205	A.21	
LWZ205	A.22	
LWZ205	A.23	
LWZ205	A.24	
LWZ205	A.26	
LWZ205	C.1	
LWZ205	D.1	
LWZ205	D.13	
LWZ205	D.18	
LWZ205	F.18	
LWZ205	F.22	
LWZ205	J.1	
LWZ205	J.2	
LWZ205	J.5	
LWZ205	J.6	
LWZ205	K.5	
LWZ205	M.2	
LWZ205	M.4	
LWZ205	M.5	
LWZ205	M.8	
LWZ205	R.12	
LWZ205	R.14	
LWZ206	A.6	
LWZ206	A.12	
LWZ206	A.19	
LWZ206	A.20	
LWZ206	A.21	
LWZ206	A.22	
LWZ206	F.9	
LWZ206	H.5	
LWZ206	K.2	
LWZ206	L.1	
LWZ206	M.8	
LWZ206	N.2	
LWZ206	N.16	
LWZ206	R.22	
LWZ207	A.22	
LWZ207	H.5	
LWZ207	K.2	
LWZ207	K.4	
LWZ207	L.1	
LWZ212	F.2	
LWZ212	F.7	
LWZ212	H.2	
LWZ302	N.3	
LWZ302	N.9	
LWZ302	N.10	
LWZ302	O.1	
LWZ302	O.2	
LWZ303	A.25	
LWZ303	A.26	
LWZ303	D.2	
LWZ303	D.8	
LWZ303	D.12	
LWZ303	D.14	
LWZ303	D.16	
LWZ303	R.44	
LWZ304	A.22	
LWZ304	A.24	
LWZ304	E.2	
LWZ304	H.6	
LWZ304	J.3	
LWZ304	K.5	
LWZ304	M.1	
LWZ304	M.3	
LWZ304	M.4	
LWZ304	M.9	
LWZ304	N.11	
LWZ304	R.16	
LWZ304	R.20	
LWZ305	D.4	
LWZ305	J.3	
LWZ305	K.3	
LWZ305	M.5	
LWZ306	A.22	
LWZ306	A.23	
LWZ306	E.3	
LWZ306	G.1	
LWZ306	H.1	
LWZ306	H.6	
LWZ306	J.3	
LWZ306	K.2	
LWZ306	K.5	
LWZ306	R.20	
LWZ307	H.1	
LWZ403	J.5	
LWZ404	A.9	
LWZ503	R.5	
LWZ503	R.6	
LWZ506	K.4	
LWZ507	K.4	
NCS0408	A.9	
NCS0606	A.6	
NZS103	M.6	
PCR0307	E.3	
PCR0307	M.8	
PCR0307	O.1	
PCR0307	R.43	
PCR0311	N.16	
PCR0407	N.14	
PCR0407	N.15	
PCR0407	N.16	
PCR0507	D.1	
PCR0507	D.2	
PCR0507	N.14	
PCR0507	N.15	
PCR0607	M.8	
PCR0607	N.15	
PCR0607	N.16	
PCR0609	M.5	
PCR0609	N.15	
PCR0707	N.14	
PCR0707	N.15	
PCR0707	N.16	
PCR0709	N.15	
PCR0809	N.15	
PFS106	R.13	
PFS106	R.42	
PFS514	R.7	
PFS528	R.11	
PMP0308	R.24	
PMP0308	R.28	
PMP0308	R.40	
PMP0310	R.40	
PMP0312	R.40	
PMZ0207	N.3	
PMZ0207	N.9	
PMZ0207	N.0	
PMZ0306	A.25	
PMZ0306	E.3	
PMZ0306	M.6	
PMZ0306	N.3	
PMZ0306	R.11	
PMZ0306	R.13	
PMZ0306	R.33	
PMZ0307	D.2	
PMZ0307	M.3	
PMZ0307	N.3	
PMZ0307	O.1	
PMZ0307	R.28	
PMZ0308	A.7	
PMZ0308	D.2	
PMZ0308	F.19	
PMZ0308	N.4	
PMZ0308	N.11	
PMZ0308	N.14	
PMZ0308	N.15	
PMZ0308	N.16	
PMZ0308	R.6	
PMZ0308	R.19	
PMZ0308	R.28	
PMZ0308	R.39	
PMZ0308	R.40	
PMZ0308	R.43	
PMZ0308	R.45	
PMZ0310	D.2	
PMZ0310	R.5	
PMZ0310	R.8	
PMZ0310	R.23	
PMZ0310	R.39	
PMZ0310	R.43	
PMZ0310	R.45	
PMZ0314	M.3	
PMZ0314	R.39	
PMZ0316	J.5	
PMZ0320	N.3	
PMZ0328	R.45	
PMZ0408	N.11	
PMZ0410	A.24	
PMZ0410	N.3	
PMZ0410	R.13	
PMZ0412	H.5	
PMZ0510	A.23	
PTP604	R.34	
PTZ603	R.7	
PTZ603	R.12	
PTZ603	R.36	
PTZ603	R.43	
PTZ605	D.15	
PTZ803	R.11	
PTZ803	R.28	
PTZ804	R.28	
PTZ805	R.8	
PTZ806	R.10	
PTZ807	R.10	
PTZ808	R.10	
PTZ1003	D.1	
PTZ1003	N.15	
PTZ1003	R.43	
PTZ1004	D.1	
PTZ1004	E.3	
PTZ1004	M.3	
PTZ1004	M.8	
PTZ1004	N.16	
PTZ1004	R.45	
PWN103	F.20	
PWN104	A.9	
PWN104	A.10	
PWN105	A.10	
PWN106	A.4	
PWN106	A.8	
PWN106	A.11	
PWN106	A.24	
PWN107	A.13	
PWN112	F.22	

Item No.	DESCRIPTION	Commencing (E) 29D-H101 Part Number	Illus. No.	Quantity	MODIFICATIONS New Part Number	MODIFICATIONS Change Point	REMARKS
	CYLINDER HEAD—VALVES—GUIDES—SPRINGS—ROCKERS						
1	**Cylinder head assembly (with valves)**	**AEC1355**		1	**AEC2007**	**Com. (E) 29D-H2864**	
2	**Cylinder head assembly**				**AEC1491**	**Com. (E) 29E-H101**	
3	Plug—core hole	**AEC1354**	1	1	**AEC2008**	**Com. (E) 29D-H2864**	
4	Stud—rocker bracket and cover	2K8160	2	1	AEC876	Com. (E) 29D-H140	
5	Stud—rocker bracket (long)	AEC491	3	2			
6	Stud—rocker bracket (short)	51K591	4	6			
7	**Guide—inlet valve—standard**	51K590	5	4			
8	Guide—inlet valve—·010″ (·254 mm.) O/S O/D	**AEC135**	6	6			
9	**Guide—exhaust valve—standard**	AEC013510	6	6			
10	Guide—exhaust valve—·010″ (·254 mm.) O/S O/D	**AEC914**	7	6	**AEC245**	**Com. (E) 29D-H4276**	**AEC914 not available; use AEC245**
11	Plate—blanking—thermal switch hole	AEC091410	7	6	AEC024510	Com. (E) 29D-H4276	AEC091410 not available; use AEC024510
12	Joint washer—thermal switch		8	1	AEC996		
13	Screw—thermal switch		9	1	AEC962	Com. (E) 29D-H2864	
14	**Valve—inlet**		10	3	PMZ0308		
15	**Valve—exhaust**	**AEC724**	11	6			
16	Spring—valve—inner	**AEC915**	12	6			
17	Spring—valve—outer	1H723	13	12			
18	Cap—spring	1H722	14	12	1G2887	Com. (E) 29E-H101	
19	Collar—spring—lower	AEC736	15	12	12H650	Com. (E) 29E-H1349	Not available; use 12H650
20	Retainer—spring	1H726	16	12			
21	Circlip—retainer	1K800	17	12 prs			
22	Grommet—valve stem	1K372	18	12			
23	Union—rocker oil feed pipe	AEK113	19	12			
24	**Shaft assembly—valve rocker**	AEC463	20	1			
25	**Shaft—rocker**	**AEC1097**		1			
26	Plug—screwed	**AEC27**	21	1			
27	Plug—plain	2K6534	22	1			
28	Bracket—rocker shaft—tapped	1D1977	23	1			
29	Bracket—rocker shaft—plain	AEC616	24	1			
30	Washer—spring—rocker shaft	11B121	25	5			
31	Washer—plain—rocker shaft	2K2561	26	2			
32	**Rocker assembly**	AEC144	27	2			
33	Bush	**AED159**	28	12			
34	Rivet	11B511	29	12			
		5C2436		12			

Item No.	DESCRIPTION	Commencing (E) 29D-H101 Part Number	Illus. No.	Quantity	MODIFICATIONS New Part Number	MODIFICATIONS Change Point	REMARKS
	Cylinder Head—Valves—Guides—Springs—Rockers—*continued*						
1	Spring—rocker spacing	2K5923	31	5			
2	Washer—rocker spacing	AEC143	32	12			
3	Screw—rocker adjusting	AED161	33	12		Fin. (E) 29D-H26212	Alternatives. AED161 and AED 260 not available; use AEC2044
4	Screw—rocker adjusting	AED260	33	12			
5	Screw—rocker adjusting		33	12	AEC2044	Com. (E) 29E-H101	
6	Locknut—adjusting screw	FNN206	34	12			
7	**Pipe—rocker oil feed**	**AEC160**	35	1			
8	Bolt—pipe to rocker bracket	AEC162	36	1			
9	Washer—bolt	AEC346	37	2			
10	Nut—rocker bracket stud	FNN506	40	12			
11	Washer—plain—nut	PWN106	38	12			
12	Washer—spring—nut	LWN206	39	12			
13	Joint—cylinder head	AEC875	41	1			
14	**Plug—sparking**	**3H2006**	42	6	**97H611**	**Com. (E) 29D-H2772**	**For cars fitted with 97H611 see Austin service journal A/167**
					3H2006	**Com. (E) 29D-H6375**	
	VALVE ROCKER COVER—OIL FILLER						
15	**Cover—valve rocker**	**AEC2041**	43	1			**Part No. change; was AEC1304. Supply also 2 off AEC2178, 2 off AEC2179 and 2 off AEC2181 for engines prior to (E) 29E-H631**
16	Cap—oil filler	8G612	44	1			
17	Joint—cover to head	AEC1332	45	1			
18	Nut—rocker cover	AEC488	46	2	AEC2181		
19	Washer—nut	AEC490	47	2	AEC2179	Com. (E) 29E-H631	
20	Bush (rubber)			2	AEC2178		
21	**Thermostat**	**11G291**	48	1	**11K399**	**Com. (E) 29D-H3079**	**For 11G291 use 11K399 for this application**
22	**Elbow—water outlet**	**AEC158**	49	1			
23	Joint—elbow	1K1056	50	1			
24	Stud—elbow to cylinder head	51K490	51	2			
25	Nut—stud	FNN105	52	2			
26	Washer—spring—screw	LWN205	53	2			
27	Plug—thermal indicator boss	ADP610	54	1			
28	Washer—plug	6K433	55	1			
29	**Plate—heater tap outlet blanking**	**AEC256**	56	1			
30	Joint—blanking plate	1G2342	57	2			
31	Screw—blanking plate	HNS0404	58	2			
32	Washer—spring—screw	LWN204	59	2			
*21A	THERMOSTAT - WAX TYPE	13H630 USE		1	13H937	(PAU230)	

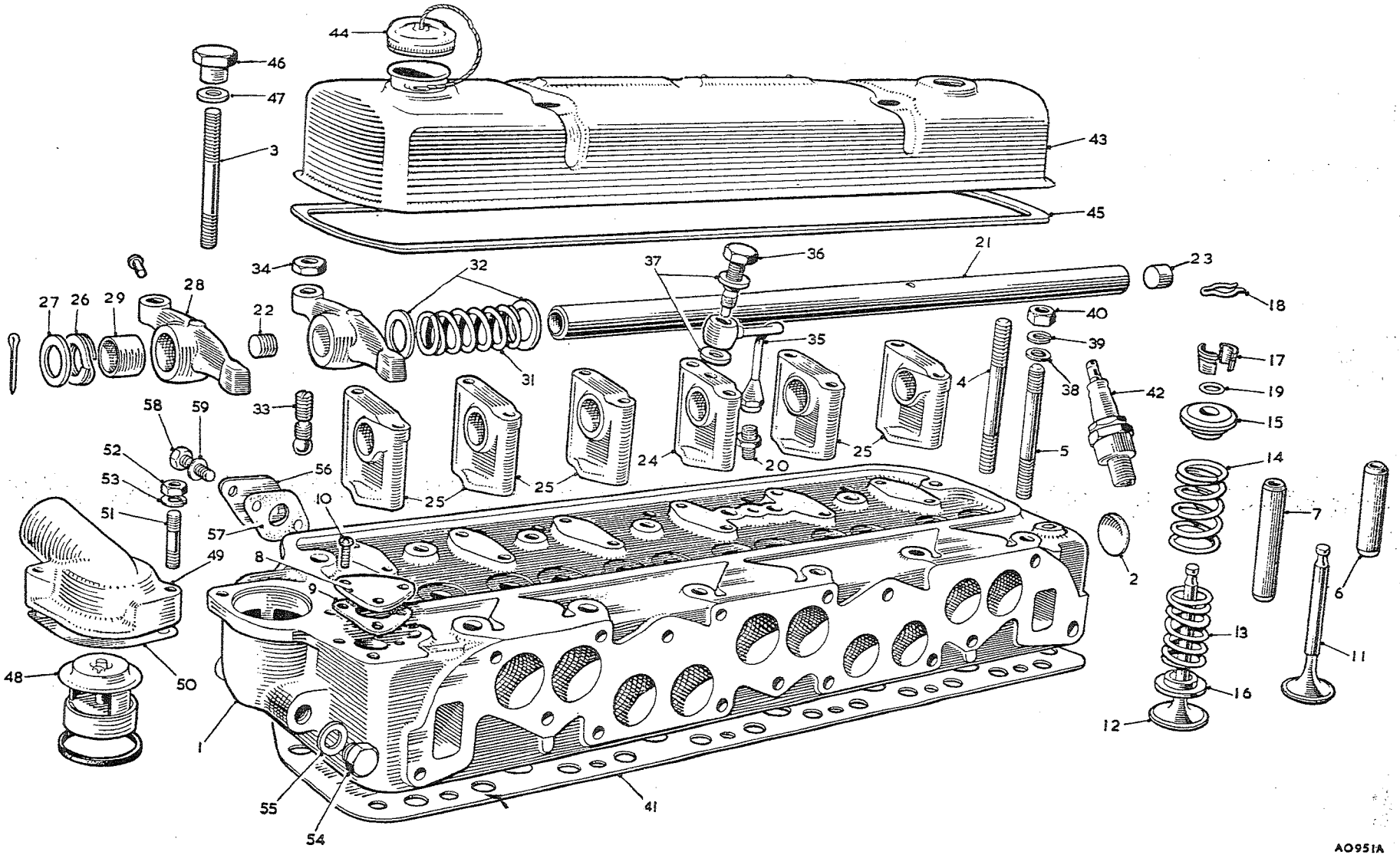

To face page A.8

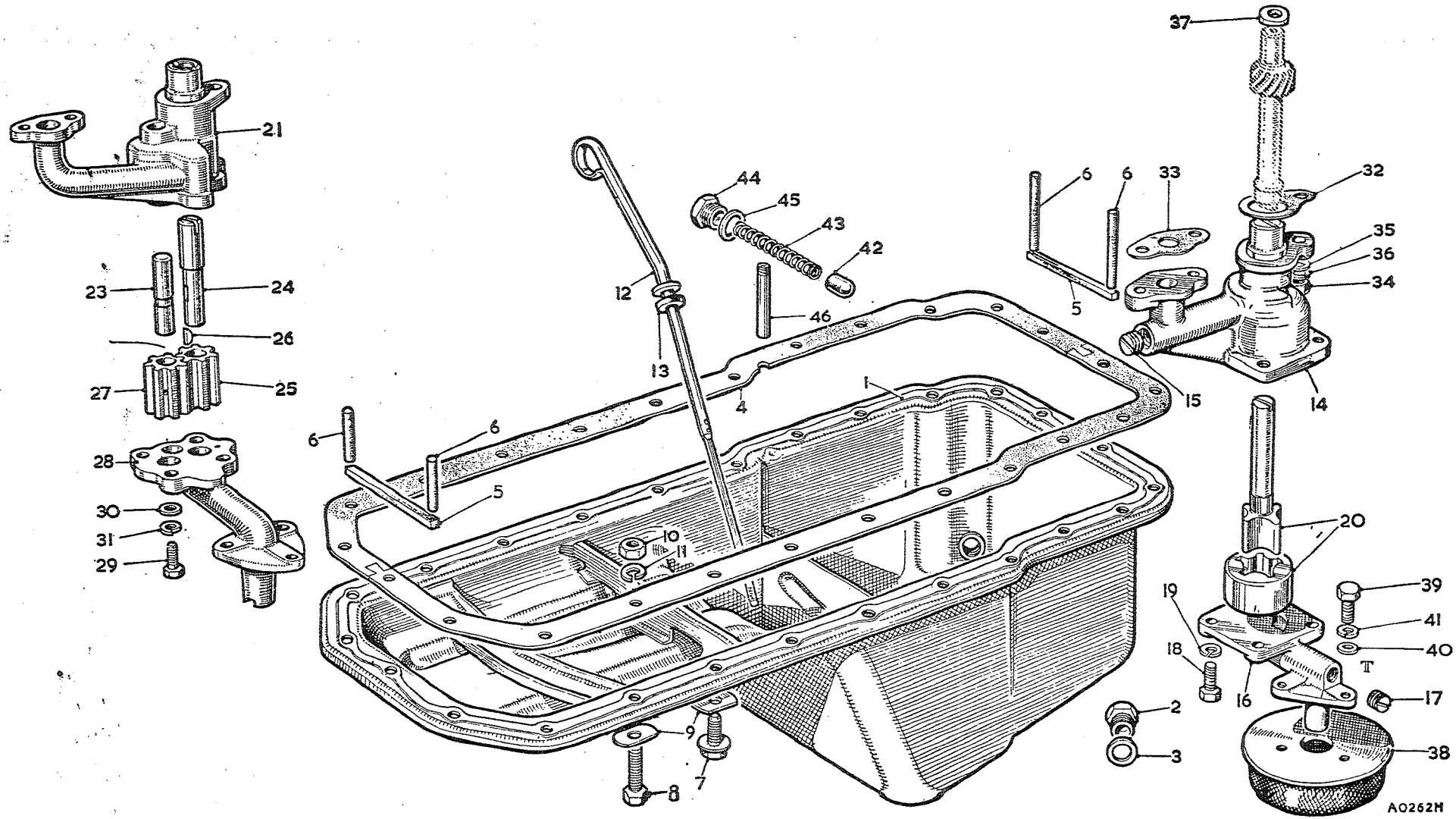

To face page A.9

Item No.	DESCRIPTION	Commencing (E) 29D-H101 Part Number	Illus. No.	Quantity	MODIFICATIONS New Part Number	MODIFICATIONS Change Point	REMARKS
	SUMP—OIL LEVEL INDICATOR						
1	**Sump—oil**	**AEC203**	1	1			
2	Plug—sump—drain	2H4685	2	1			
3	Washer—plug (copper)	AEC699	3	1			
4	Joint—sump to crankcase	AEC205	4	1	AYB 17		
5	Seal—front and rear main bearing cap	AEC108	5	2			
6	Plug—front and rear main bearing cap	AEC888	6	4			
7	Bolt—sump to crankcase	6K639	7	23			Not available; use HZS0404 with LWZ404
8	Bolt—sump to crankcase			23	HZS0404		
9	Washer—shakeproof—bolt			23	LWZ404		
10	Bolt—sump and clip to crankcase	HNS0408	8	2			
11	Washer—bolt	2K5197	9	25			
12	Nut—bolt	FNN104	10	2			
13	Washer—spring—nut	LWN204	11	2			
14	**Indicator—oil level**	**AEC667**	12	1			
15	Washer—indicator (rubber)	AEC671	13	1			
	OIL PUMP—PIPE—OIL RELEASE VALVE						
16	**Pump assembly—oil**	**AEC692**		1			
17	**Body**	**AEC695**	14	1		(PAU 2249)	
18	Plug	~~AEC405~~	15	1	1Y L 5		
19	**Cover—body**	**AEC407**	16	1		Fin. (E) 29D-H894	
20	Plug	AEC405	17	1			
21	Screw—cover to body	HNS0407	18	4			
22	Washer—spring—screw	LWN204	19	4			
23	**Shaft—driving (with inner and outer rotors)**	**AEC406**	20	1			
24	**Pump assembly—oil**			1	**AEC1341**		
25	**Body**		21	1	**AEC925**		
26	Bush			1	NSP		
27	Shaft—driven		23	1	AEC928		
28	Shaft—driving		24	1	AEC929		
29	Gear—driving		25	1	1K105	Com. (E) 29D-H895	
30	Key—gear		26	1	WKN405		
31	Gear—driven		27	1	1K106		
32	Cover—body		28	1	AEC930		
33	Screw—cover to body		29	4	NCS0408		
34	Washer—plain—screw		30	4	PWN104		
35	Washer—spring—screw		31	4	LWN204		

Item No.	DESCRIPTION	Commencing (E) 29D-H101 Part Number	Illus. No.	Quantity	MODIFICATIONS New Part Number	Change Point	REMARKS
	SUMP—OIL LEVEL INDICATOR						
1	**Sump—oil**	**AEC203**	1	1			
2	Plug—sump—drain	2H4685	2	1			
3	Washer—plug (copper)	AEC699	3	1			
4	Joint—sump to crankcase	AEC205	4	1	AYB 12		
5	Seal—front and rear main bearing cap	AEC108	5	2			
6	Plug—front and rear main bearing cap	AEC888	6	4			
7	Bolt—sump to crankcase	6K639	7	23			Not available; use HZS0404 with LWZ404
8	Bolt—sump to crankcase			23	HZS0404		
9	Washer—shakeproof—bolt			23	LWZ404		
10	Bolt—sump and clip to crankcase	HNS0408	8	2			
11	Washer—bolt	2K5197	9	25			
12	Nut—bolt	FNN104	10	2			
13	Washer—spring—nut	LWN204	11	2			
14	**Indicator—oil level**	**AEC667**	12	1			
15	Washer—indicator (rubber)	AEC671	13	1			
	OIL PUMP—PIPE—OIL RELEASE VALVE						
16	**Pump assembly—oil**	**AEC692**		1			
17	**Body**	**AEC695**	14	1			
18	Plug	~~AEC405~~	15	1	N L S	(PAU2249)	
19	**Cover—body**	**AEC407**	16	1		Fin. (E) 29D-H894	
20	Plug	AEC405	17	1			
21	Screw—cover to body	HNS0407	18	4			
22	Washer—spring—screw	LWN204	19	4			
23	**Shaft—driving (with inner and outer rotors)**	**AEC406**	20	1			
24	**Pump assembly—oil**			1	**AEC1341**		
25	**Body**		21	1	**AEC925**		
26	Bush			1	NSP		
27	Shaft—driven		23	1	AEC928		
28	Shaft—driving		24	1	AEC929		
29	Gear—driving		25	1	1K105	Com. (E) 29D-H895	
30	Key—gear		26	1	WKN405		
31	Gear—driven		27	1	1K106		
32	Cover—body		28	1	AEC930		
33	Screw—cover to body		29	4	NCS0408		
34	Washer—plain—screw		30	4	PWN104		
35	Washer—spring—screw		31	4	LWN204		

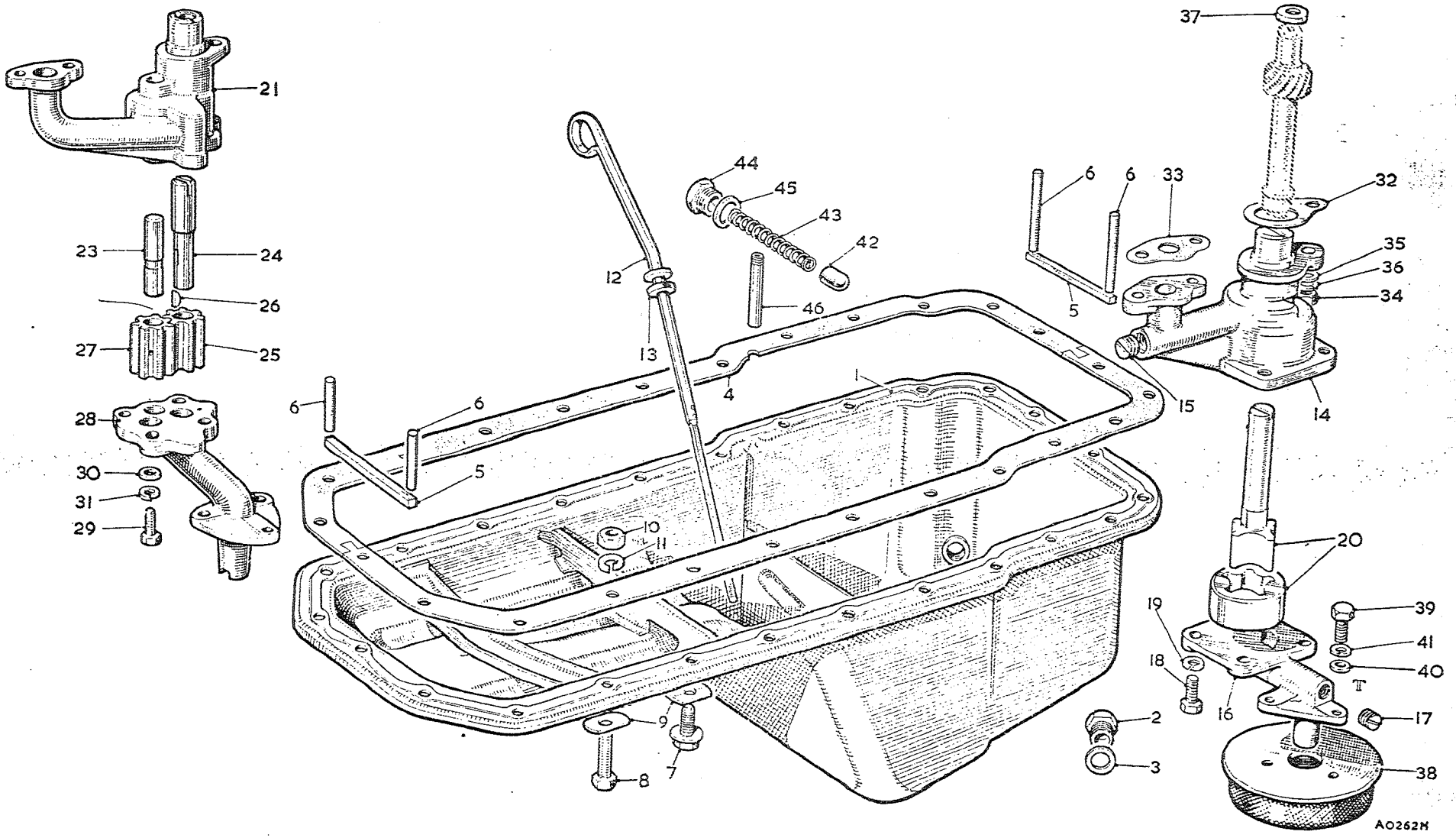

To face page A.10

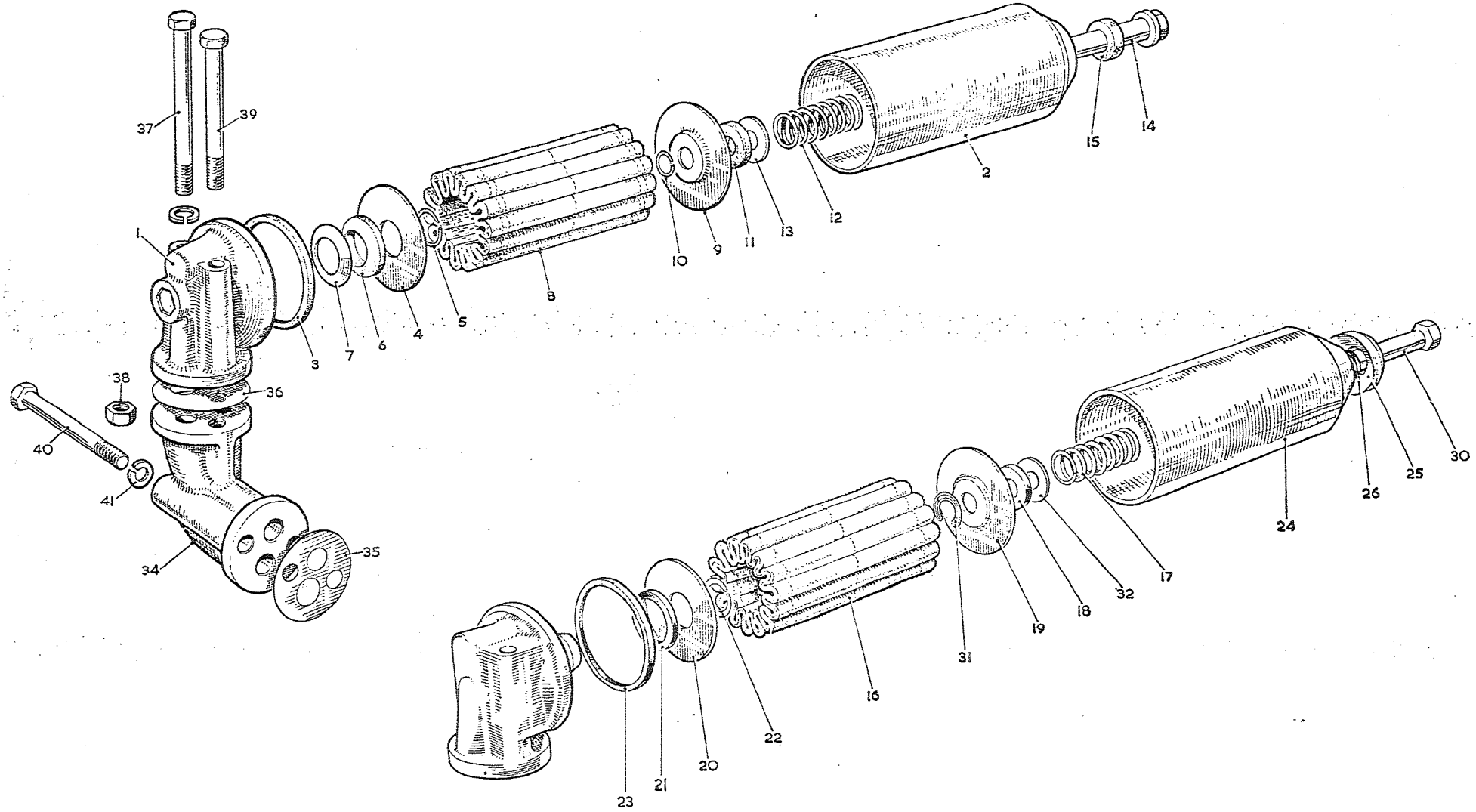

A3334A

To face page A.11

Item No.	DESCRIPTION	Commencing (E) 29D-H101 Part Number	Illus. No.	Quantity	MODIFICATIONS New Part Number	MODIFICATIONS Change Point	REMARKS
	OIL FILTER (EXTERNAL)						
1	**Filter—oil (Tecalemit)**	**1B2897**		1			**Alternative to AEC897. No longer available; use component parts**
2	Head assembly (for use with ·375″ (9·52 mm.) B.S.F. centre bolt)	AJC5011	1	1			
3	Head assembly (for use with ·375″ (9·52 mm.) U.N.F. centre bolt)	17H940	1	1			
4	Sump	17H3	2	1			
5	Seal—sump to head	17H4	3	1			
6	Plate—element clamp	7H147	4	1			
7	Circlip—plate to head	2A700	5	1			
8	Washer—clamp plate (felt)	7H1756	6	1			Part No. change; was 7H157
9	Washer—dished—clamp plate	7H1761	7	1			
10	**Element**	**48G171**	**8**	1			
11	Plate—pressure	7H1763	9	1	17H942		**Part No. change; was 2H4340** 7H1763 not available; use 17H942
12	Circlip—plate to centre bolt	7H1840	10	1	17H2877		7H1840 not available; use 17H2877
13	Washer—pressure plate (felt)	7H1758	11	1			
14	Spring—pressure plate	7H1764	12	1			
15	Washer—spring	7H1765	13	1			
16	Bolt—centre—·375″ (9·52 mm.) B.S.F.	7H1762	14	1			
17	Bolt—centre—·375″ (9·52 mm.) U.N.F.	17H775	14	1	17H1272		17H775 not available; use 17H1272
18	Seal—bolt to sump	7H1759	15	1			
19	**Filter—oil (Purolator)**	**AEC897**		1			**Alternative to 1B2897. No longer available; use component parts**
20	**Element**	**48G171**	**16**	1			**Part No. change; was 27H1135**
21	Spring	7H25	17	1			
22	Seal	7H28	18	1			
23	Plate—pressure	17H1148	19	1			
24	Plate—clamping	17H1150	20	1			
25	Gasket	17H1152	21	1			
26	Ring—snap	17H1167	22	1			
27	Seal	17H1168	23	1	27H1983		17H1168 not available; use 27H1983
28	Sump	27H1144	24	1	37H140		27H1144 not available; use 37H140
29	Collar	27H1143	25	1			
30	Seal—'O' section	17H1173	26	1			
31	**Head assembly**	**17H3693**	**27**	1			
32	Head	27H1141		1			
33	Seat—relief valve	27H1139		1			No longer available; use 17H3693
34	Spring—relief valve	27H1140		1			
35	Ball	BLS112		1			Part No. change; was 27H7466
36	Bolt—centre	27H1142	30	1			
37	Circlip	17H1476	31	1			
38	Washer	7H7553	32	1	PWN106		7H7553 not available; use PWN106

Item No.	DESCRIPTION	Commencing (E) 29D-H101 Part Number	Illus. No.	Quantity	MODIFICATIONS New Part Number	MODIFICATIONS Change Point	REMARKS
	Oil Filter (External)—*continued*						
1	**Plate—adaptor**	**AEC675**	34	1			
2	Joint—plate to crankcase	1B1233	35	1			
3	Joint—filter to plate	1B1233	36	1			
4	Bolt—oil filter to plate	HBZ0636	37	1			
5	Nut—bolt	FNZ106	38	1			
6	Screw—oil filter to plate	HCN0631	39	1			
7	Bolt—plate to crankcase	HBZ0632	40	2			
8	Washer—spring—bolt	LWZ206	41	4			

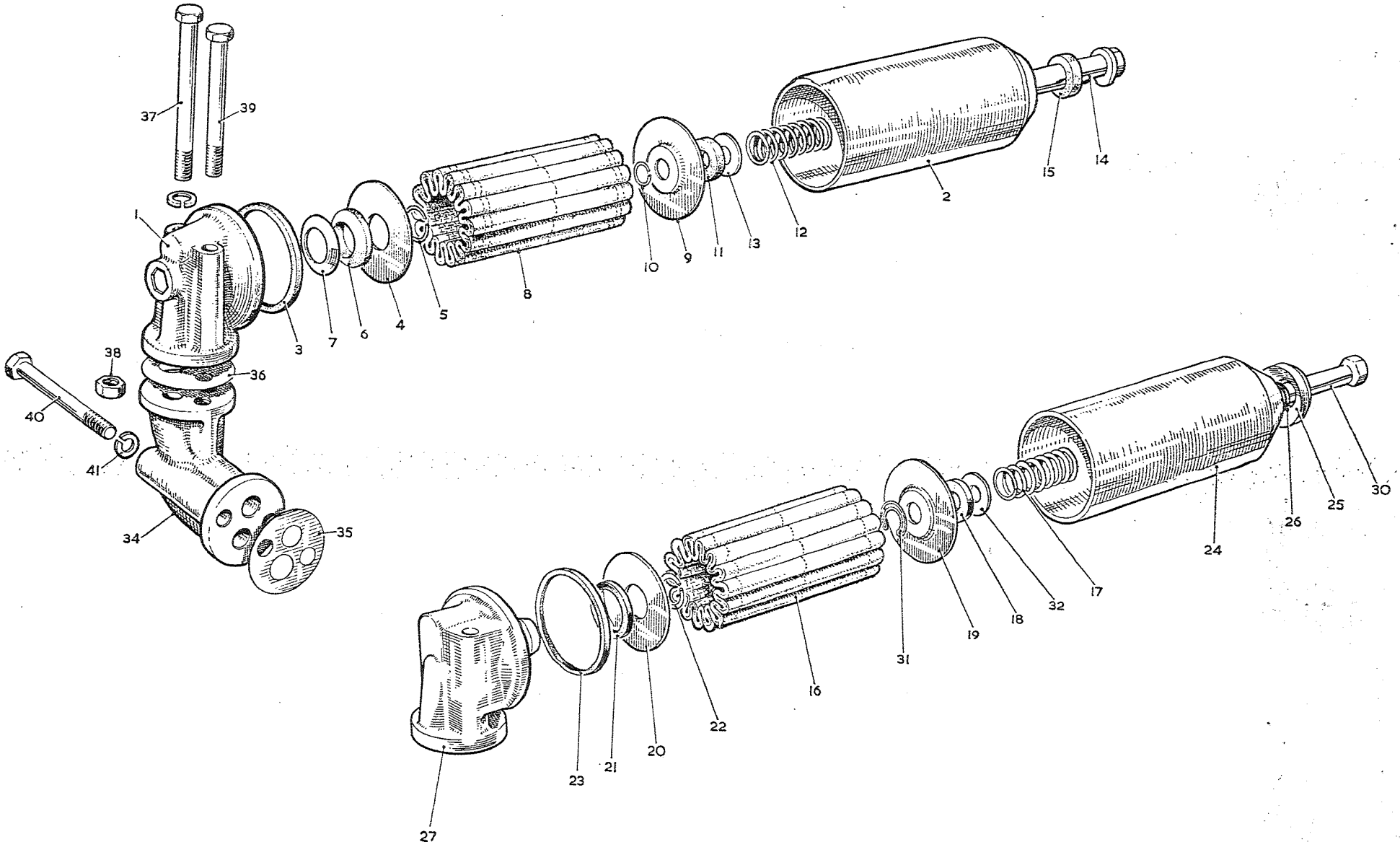

To face page A.12

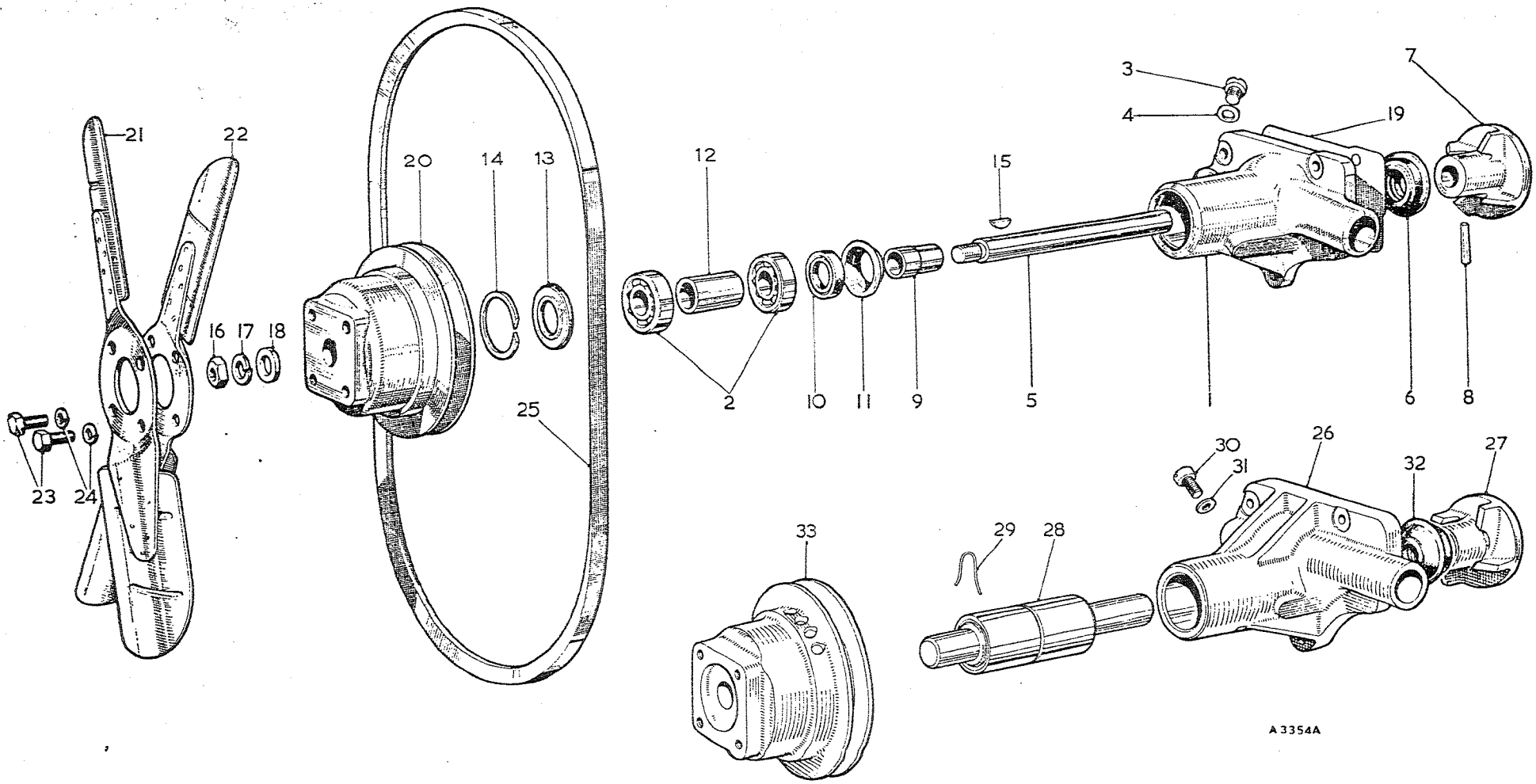

To face page A.13

Item No.	DESCRIPTION	Commencing (E) 29D-H101 Part Number	Illus. No.	Quantity	MODIFICATIONS New Part Number	Change Point	REMARKS
	WATER PUMP—FAN PULLEY						
1	**Pump assembly—water**	**AEC1356**		1			
2	Body	AEC206	1	1			
3	Bearing—ball	6K803	2	2			
4	Plug—oil filter screw	53K1452	3	1			
5	Washer—plug (fibre)	2K4958	4	1			
6	Spindle	AEC383	5	1			
7	Seal	8G627	6	1			
8	Vane	AEC609	7	1			
9	Pin—vane (taper)	TPS0710	8	1			
10	Distance piece—vane	AEC384	9	1			
11	Seal—bearing oil	2H4500	10	1		Fin. (E) 29E-H2245 -	
12	Housing—oil seal	1B1424	11	1			
13	Distance piece—bearing	1K756	12	1			
14	Retainer—bearing oil	AEC214	13	1			
15	Circlip—bearing	1K759	14	1			
16	Key—pulley	2K7056	15	1			
17	Nut—spindle	FNZ207	16	1			
18	Washer—spring—nut	LWN207	17	1			
19	Washer—plain—nut	PWN107	18	1			
20	**Pulley**	**AEC891**	**20**	1			
21	**Pump assembly—water**			1	**AEC2018**		
22	Body		26	1	AEC2019		
23	Vane		27	1	AEC2020		
24	Bearing and spindle assembly		28	1	1H1153	Com. (E) 29E-H2246	
25	Wire—bearing locating		29	1	2A778		
26	Screw—lubricating point		30	1	53K1433		
27	Washer—screw (fibre)		31	1	2K4974		
28	Seal		32	1	8G698 13H772		For 8G698 use 13H772 for this application
29	**Pulley**		**33**	1	**AEC2021**	**Com. (E) 29E-H5807**	
30	Joint—pump to crankcase	AEC216	19	1			

Item No.	DESCRIPTION	Commencing (E) 29D-H101 Part Number	Illus. No.	Quantity	MODIFICATIONS New Part Number	MODIFICATIONS Change Point	REMARKS
	DISTRIBUTOR AND DYNAMO MOUNTING						
1	**Housing—distributor and tachometer**	**AEC685**	1	1			
2	Screw—housing to crankcase	HNS0407	2	3			
3	Washer—spring—screw	LWN204	3	3			
4	**Gear—distributor driving**	**AEC242**	4	1			
5	Seal—oil—distributor	AEC681	25	1			
6	Dog—driving	AEC678	26	1			
7	Extension—driving spindle	AEC686	27	1			
8	Peg—spindle	2K2163	28	1			
9	Button—tachometer pinion thrust	1A3073	29	1			
10	Pillar—dynamo adjusting link	AEC293	5	1			
11	Nut—pillar to engine	FNN107	6	1			
12	Washer—spring—nut	LWN207	7	1			
13	Nut—adjusting link to pillar	LNZ206	8	1			
14	Washer—plain—nut	PWN106	9	1			
15	**Link—dynamo adjusting**	**AEC238**	10	1			Part No. change; was 2K9932
16	Bolt—dynamo to cylinder side cover (front)	HBN0510	11	1			
17	Bolt—dynamo to cylinder side cover (rear)	HNS0509	12	1			Part No. change; was HBN0509
18	Nut—bolt	FNN105	13	2			
19	Washer—spring—nut	LWN205	14	2			
20	Screw—dynamo to adjusting link	3H2092	15	1	NCS0507		3H2092 not available; use NCS0507
21	Washer—spring—screw	2K5319	16	1	LWN305		2K5319 not available; use LWN305
22	**Pulley—dynamo**	**AEC910**	17	1			
23	**Fan—dynamo**	**1B2178**	18	1			
	CYLINDER LINER						
24	**Liner—cylinder block**	**AEC879**		6			**For service purposes only**
	BREATHER PIPE						
25	**Pipe—breather**	**AEC703**	19	1			
26	Locknut—breather pipe	1B2261	20	1			
	NAME PLATE						
27	**Name plate—rocker cover**	**2A263**		1			
	HEATER CONTROL TAP						
28	**Tap—heater control**	**2H4933**	21	1			**Alternatives. 3H804 not available; use 2H4933**
29	**Tap—heater control**	**3H804**		1			
30	Washer—tap	1G2342	22	1			
31	Screw—tap	HNS0405	23	2			
32	Washer—spring—screw	LWN204	24	2			

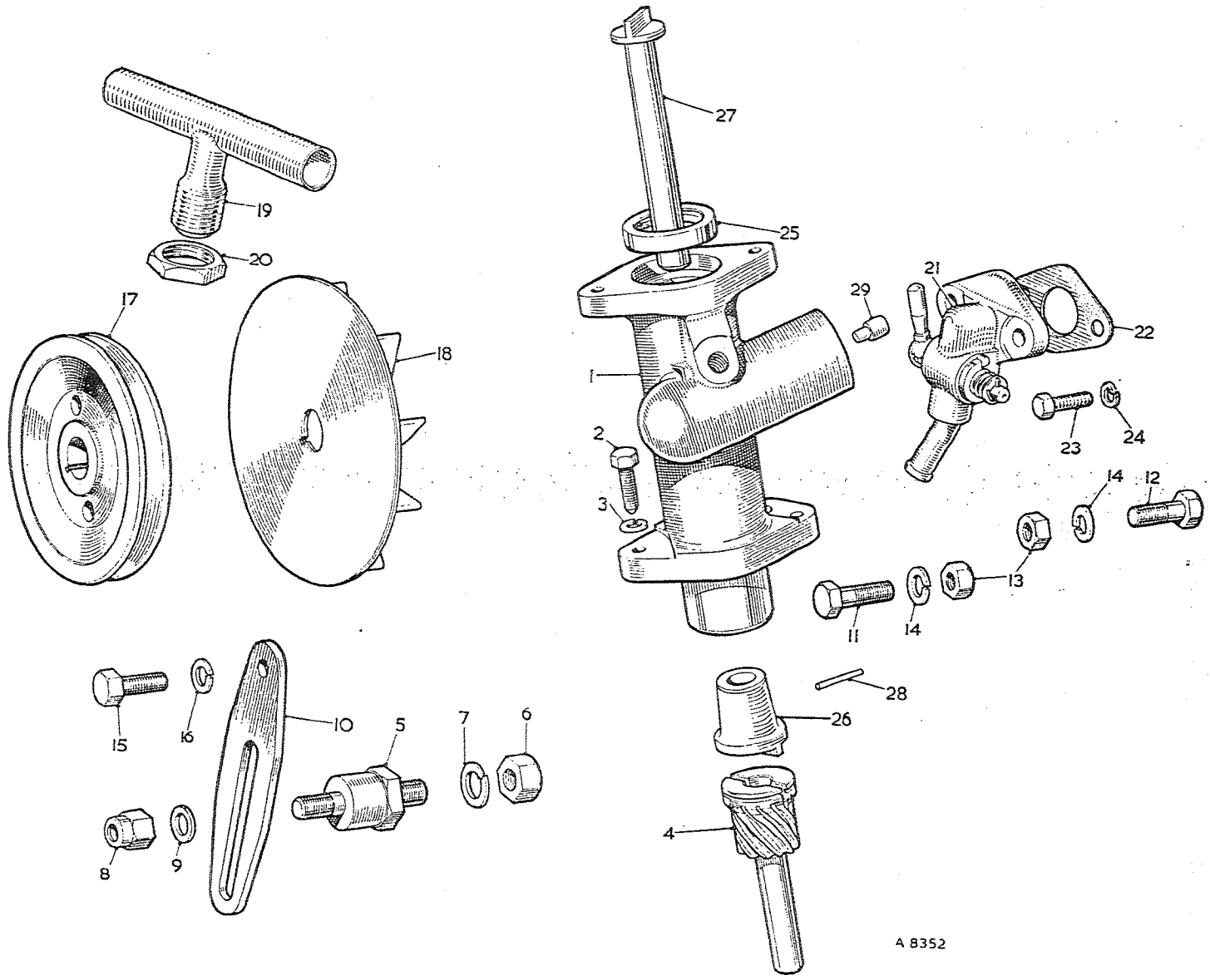

To face page A.14

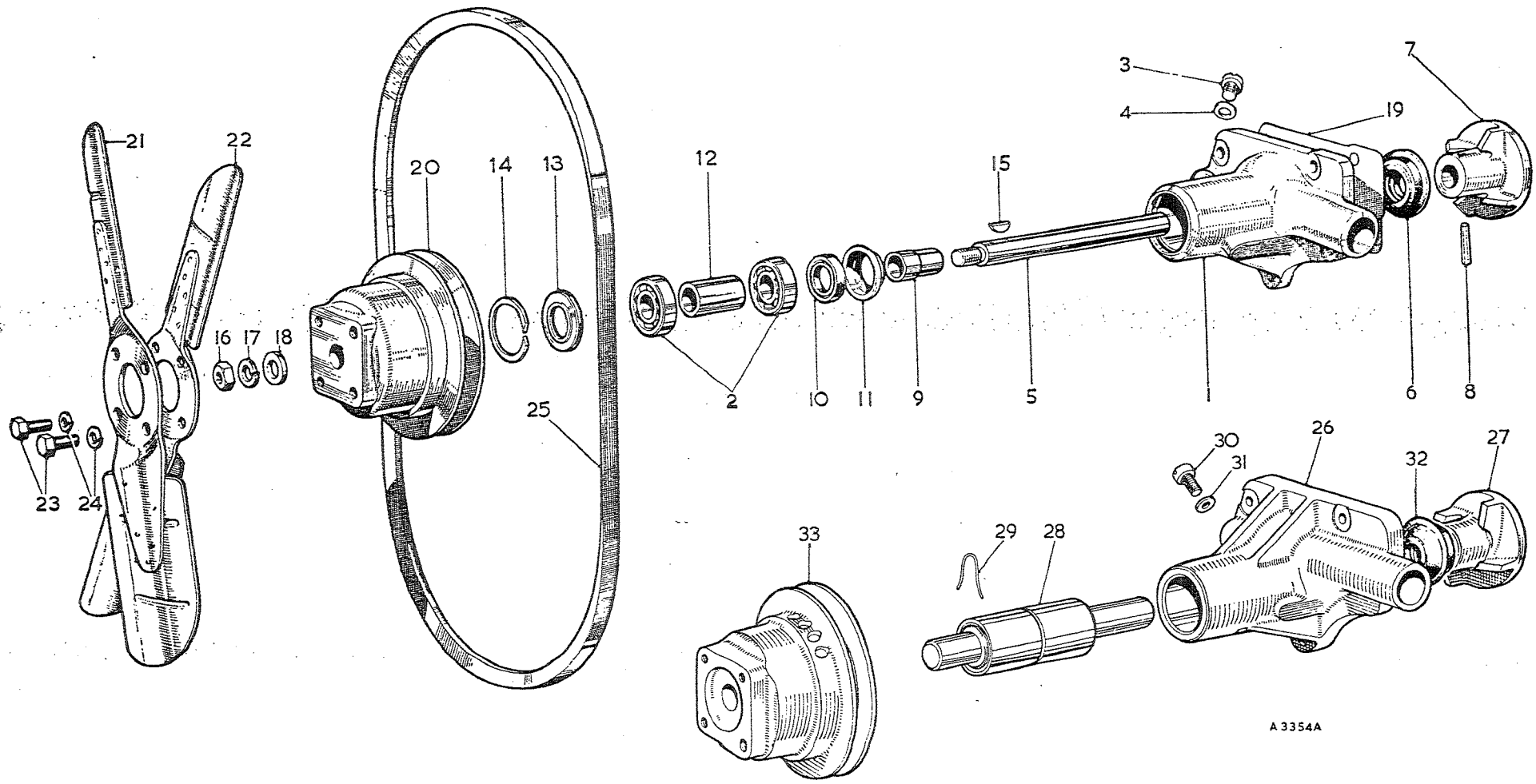

To face page A.15

Item No.	DESCRIPTION	Commencing (E) 29D-H101 Part Number	Illus. No.	Quantity	MODIFICATIONS New Part Number	MODIFICATIONS Change Point	REMARKS
	FAN BLADE—BELT						
1	**Blade assembly—fan—front**	**AEC1025**	21	1			
2	**Blade assembly—fan—rear**	**AEC1024**	22	1			
3	**Fan assembly—6 bladed** **Not UK**			1	**AEC76**	**Com. (C) 13601 Fin. (C) 18208**	
4	Screw—blade to pulley	HNS0507	23	4			
5	Washer—spring—screw	LWN205	24	4			
6	**Belt—fan (wedge type)**	**AEC932** WSE	25	1	132760	(PHC2525)	

Item No.	DESCRIPTION	Commencing (E) 29D-H101 Part Number	Illus. No.	Quantity	MODIFICATIONS New Part Number	MODIFICATIONS Change Point	REMARKS
	ENGINE SERVICE KITS						
1	**Joint washer set—engine decarbonising**	**8G2291**		1	**8G2326** **8G2353**	**Com. (E) 29E-H101** **Com. (E) 29E-H5590**	**8G2326 not available; use 8G2353**
2	Joint washer—cylinder head	AEC875		1			
3	Joint washer—valve rocker cover	AEC1332		1			
4	Joint washer—exhaust pipe flange	ACC5137		2			
5	Grommet—valve stem	AEK113		12			
6	Joint washer—inlet and exhaust manifold	AEC731		1			
7	Joint washer—inlet manifold to exhaust manifold	AEC874		2	AEC2056	Com. (E) 29E-H101	
8	Joint washer—heat shield to carburetter	AED308		2/6	AEC2183		Quantity increased at (E) 29E-H101
9	**Joint washer set—engine supplementary**	**8G2229**		1	**8G2327**	**Com. (E) 29E-H101**	**Use together with engine decarbonising joint washer set for complete engine overhaul. 8G2229 not available; use 8G2327**
10	Joint washer—front mounting plate	AEC337		1	AEC2033	Com. (E) 29E-H101	
11	Joint washer—rear mounting plate	AEC128		1			
12	Joint washer—cylinder side cover—front	AEC313		1			
13	Joint washer—cylinder side cover—centre and rear	1A2203		2	12A24	Com. (E) 29E-H101	
14	Joint washer—timing cover	AEC202		1			
15	Joint washer—chain tensioner	AEC339		1			
16	Joint washer—sump to block	AEC205		1			
17	Joint washer—oil pump to block	AEC698		1			
18	Joint washer—pump filter flange to block	AEC315		1			
19	Joint washer—oil filter	AEC288		1			
20	Joint washer—water pump	AEC216		1			
21	Joint washer—water outlet elbow	AEC157		1	1K1056	Com. (E) 29E-H101	
22	Joint washer—thermostat	1G1365		1			
23	Washer—sump drain plug	AEC699		1			
24	Washer—drain tap	2K4954		1			
25	Seal—front and rear main bearing caps	AEC108		2			
26	Plug—front and rear main bearing caps	AEC357		4	AEC888	Com. (E) 29E-H101	
27	**Chain tensioner servicing kit**	**17H341**		1			
28	Spring	NSP		1			
29	Bottom plug	NSP		1			
30	Tab washer	NSP		1			
31	Cylinder	NSP		1			

Item No.	DESCRIPTION	Commencing (E) 29D-H101 Part Number	Illus. No.	Quantity	MODIFICATIONS New Part Number	MODIFICATIONS Change Point	REMARKS
	Engine Service Kits—*continued*						
1	**Water pump repair kit—minor**	**8G8021**		1			
2	Retainer—bearing—oil	AEC214		1			
3	Circlip—bearing	1K759		1			
4	Seal—oil—bearing	2H4500		1			
5	Seal—water	8G627		1			
6	Washer—plug	2K4958		1			
7	Joint washer—pump to crankcase	AEC216		1			
8	**Water pump repair kit—major**	**8G2309**		1			
9	Retainer—bearing—oil	AEC214		1			
10	Circlip—bearing	1K759		1			
11	Seal—oil—bearing	2H4500		1			
12	Housing—oil seal	1B1424		1		Fin. (E) 29E-H2245	
13	Seal—water	8G627		1			
14	Washer—plug	2K4958		1			
15	Joint washer—pump to crankcase	AEC216		1			
16	Spindle and vane	AEC1001		1			
17	Bearing	6K803		2			
18	Distance piece—bearing	1K756		1			
19	Key—pulley	WKN404		1			
20	Nut—spindle	FNN207		1			
21	Washer—spring—nut	LWN307		1			
22	Distance piece—vane	AEC384		1			

Illus. No.	DESCRIPTION	Commencing (E) 29D-H101 Part Number	Illus. No.	Quantity	MODIFICATIONS New Part Number	MODIFICATIONS Change Point	REMARKS
	INLET AND EXHAUST MANIFOLD						
1	**Manifold—exhaust—front**	**AEC1377**	1	1			
2	**Manifold—exhaust—rear**	**AEC1378**	2	1			
3	Stud—outlet flange	53K507	3	6			
4	Nut—stud	BNN105	4	6			
5	Washer—plain—stud	PWZ105	5	6		Fin. (E) 29D-H26212	
6	Joint—inlet and exhaust manifold to cylinder head	AEC731	6	1			
7	Stud—exhaust manifold to cylinder head	53K564	7	10			
8	Nut—stud	AEC350	8	10			
9	Washer—plain—stud	PWZ106	9	10			
10	**Manifold—inlet**	**AEC1376**	10	1	**AEC2009** **AEC1376**	**Com. (E) 29D-H2864** **Com. (E) 29D-H6395** **Also 6369, 6374-6380, 6382, 6389, 6390, 6392** **Fin. (E) 29D-H26212**	Part No. change; was AEC871
11	Plug—core	12H736	11	1			
12	Stud—carburetter to manifold	CHS2561	12	8			
13	Nut—stud	FNZ105	13	8			
14	Washer—spring—stud	LWZ205	14	8			
15	Washer—plain—stud	PWZ105	15	8		Fin. (E) 29D-H26212	
16	Plug—vacuum take off	AEC479	16	1			
17	Plug—servo boss	ADP610	17	1			
18	Washer—plug	6K433	18	1			
19	Adaptor—pipe			3	AEC965	Com. (E) 39D-H2864 except 6369, 6374-6380, 6382, 6389, 6390, 6392 Fin. (E) 29D-H6394 Fin. (E) 29D-H26212	
20	Plug—adaptor holes in inlet manifold			3	AEC2014		See Austin Service Journal A/166

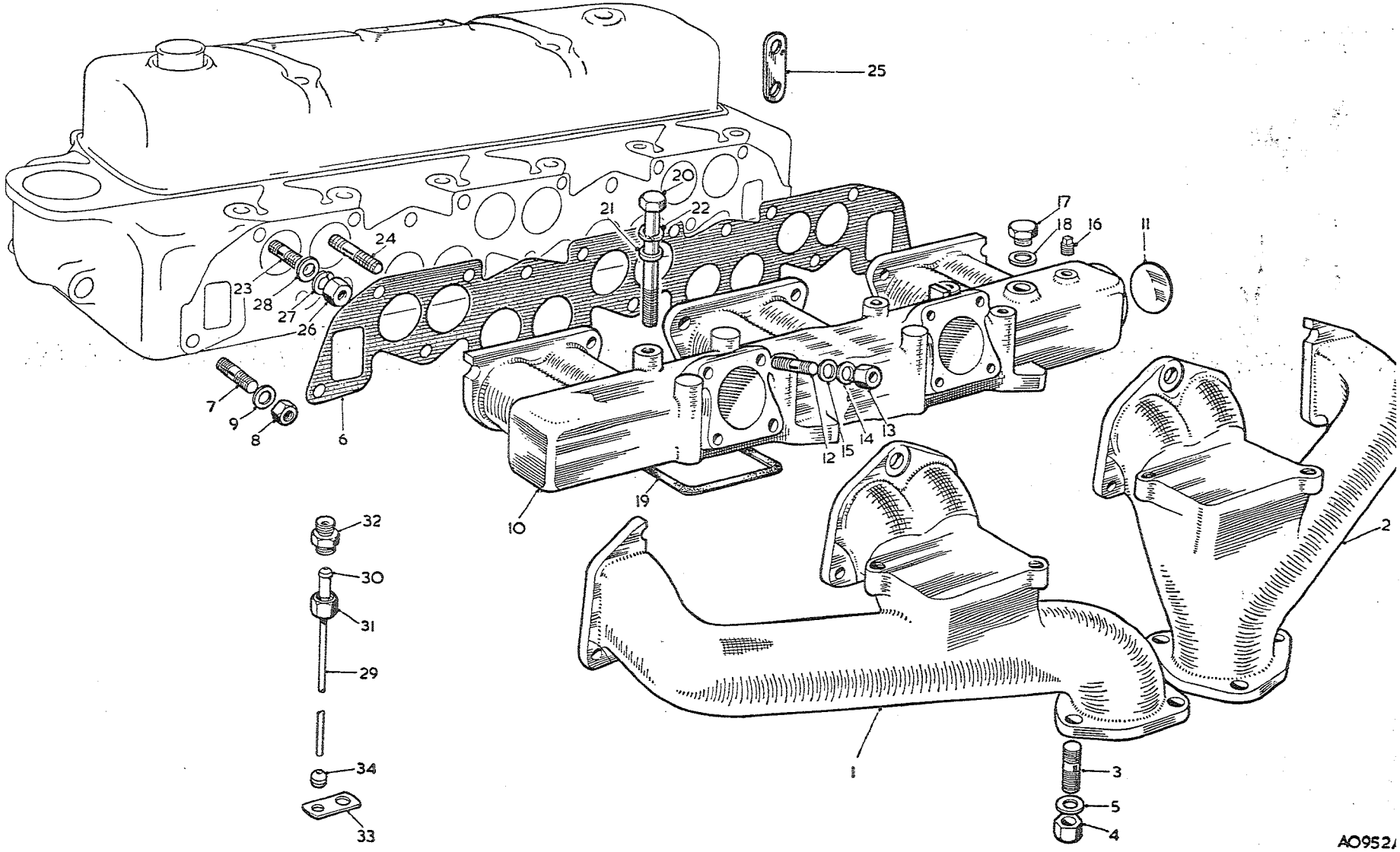

To face page A.18

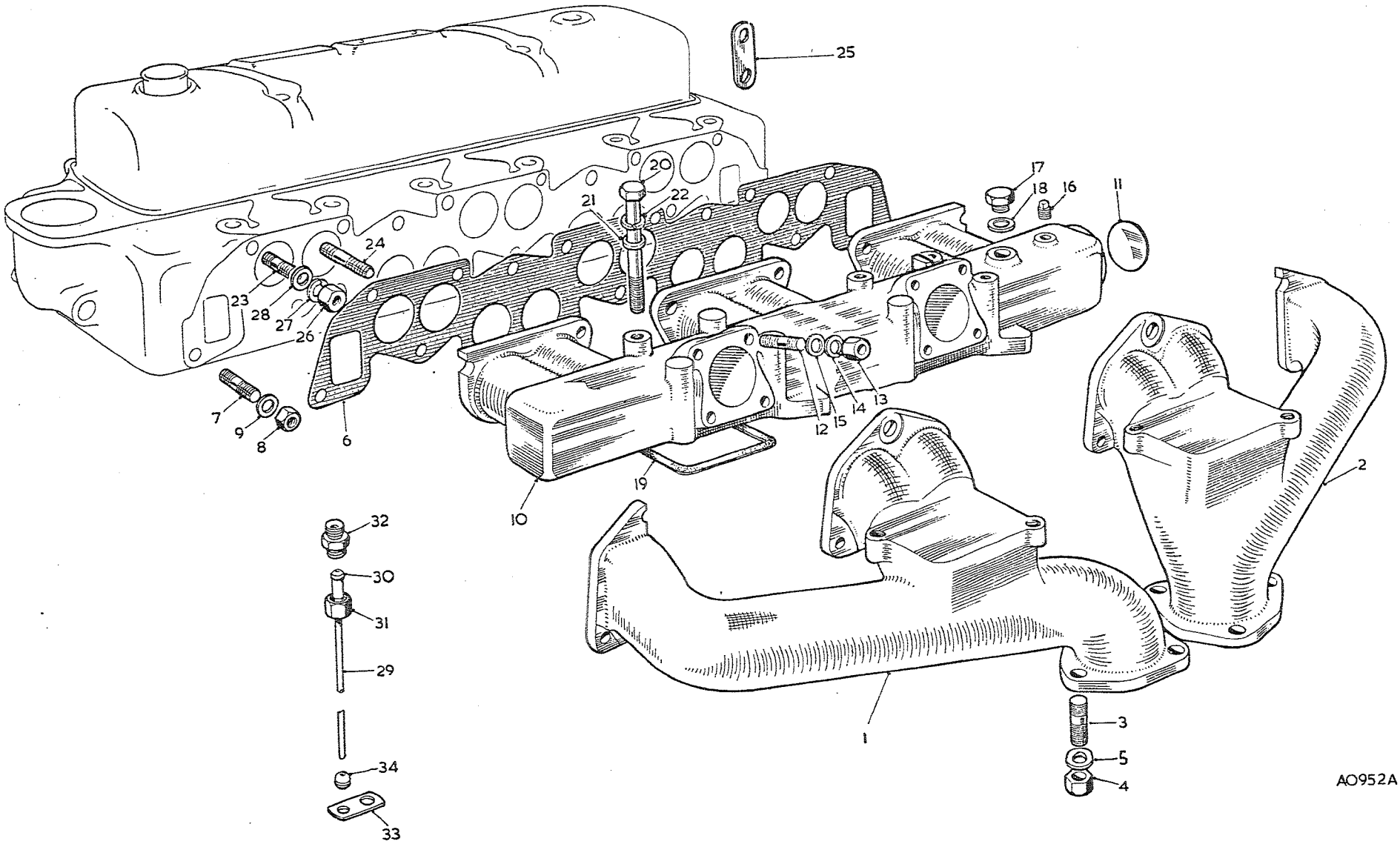

To face page A.19

Item No.	DESCRIPTION	Commencing (E) 29D-H101		Quantity	MODIFICATIONS		REMARKS
		Part Number	Illus. No.		New Part Number	Change Point	
	Inlet and Exhaust Manifold—*continued*						
1	Joint—inlet to exhaust manifold	AEC950	19	2			
2	Bolt—inlet to exhaust manifold	HBZ0526	20	4			
3	Washer—plain—bolt	PWZ105	21	4			
4	Washer—spring—bolt	LWZ205	22	4			
5	Stud—short—inlet manifold to cylinder head	51K562	23	5			
6	Stud—long—inlet manifold to cylinder head	53K563	24	2			
7	Clip—retainer—thermo capillary pipe	AHB5397	25	2			
8	Nut—stud	FNZ106	26	7			
9	Washer—spring—stud	LWZ206	27	7			
10	Washer—plain—stud	PWZ106	28	7		Fin. (E) 29D-H26212	
11	**Pipe—drain—fuel**	**AEC449**	**29**	**2**			
12	Nipple—pipe	2K6192	30	2			
13	Nut—pipe	2K6193	31	2			
14	Unions—drain pipe	AEC450	32	2			
15	Clip—pipe	1A2104	33	2			
16	Ferrule—clip	2H4935	34	2			

Item No.	DESCRIPTION	Commencing (E) 29D-H101 Part Number	Illus. No.	Quantity	MODIFICATIONS New Part Number	MODIFICATIONS Change Point	REMARKS
	Inlet and Exhaust Manifold—*continued*						
1	**Manifold—exhaust—front**		1	1	**AEC1495**		
2	**Manifold—exhaust—rear**		2	1	**AEC1496**		
3	Stud—outlet flange		3	6	53K507		
4	Nut—stud		4	6	BNN105		
5	Washer—plain—stud		5	6	PWZ105		
6	Joint—inlet and exhaust manifold to cylinder head		6	1	AEC731	Com. (E) 29E-H101	
7	Stud—exhaust manifold to cylinder head		7	6	53K564		
8	Nut—stud		8	6	AEC350		
9	Washer—plain—stud		9	6	PWZ106		
10	Bolt—exhaust manifold to cylinder head		10	4	HBZ0634		
11	Washer—plain—bolt		11	4	PWZ106		
12	Washer—spring—bolt		12	6	LWZ206		
13	**Manifold—inlet—front**		13	1	**AEC1492**	**Com. (E) 29E-H101**	
					AEC1510	Com. (E) 29E-H929 Also 889, 890, 892	
14	Stud—carburetter to manifold		14	2	CHS2512	Com. (E) 29E-H101	
					CHS2513	Com. (E) 29E-H929 Also 889, 890, 892	
15	Nut—stud		15	2	FNZ105		
16	Washer—plain—stud		16	2	PWZ105		
17	Washer—spring—stud		17	2	LWZ205	Com. (E) 29E-H101	
18	Plug—vacuum take-off		18	1	AEC479		
19	Plug—servo boss		19	1	AEC997		
20	**Manifold—inlet—centre**		20	1	**AEC1493**		
					AEC1511	**Com. (E) 29E-H929 Also 889, 890, 892**	
21	**Manifold—inlet—rear**		21	1	**AEC1494**	**Com. (E) 29E-H101**	
					AEC1512	**Com. (E) 29E-H929 Also 889, 890, 892**	
22	Stud—carburetter to manifold		22	4	CHS2512	Com. (E) 29E-H101	
					CHS2513	Com. (E) 29E-H929 Also 889, 890, 892	
23	Nut—stud		23	4	FNZ105		
24	Washer—plain—stud		24	4	PWZ105	Com. (E) 29E-H101	
25	Washer—spring—stud		25	4	LWZ205		

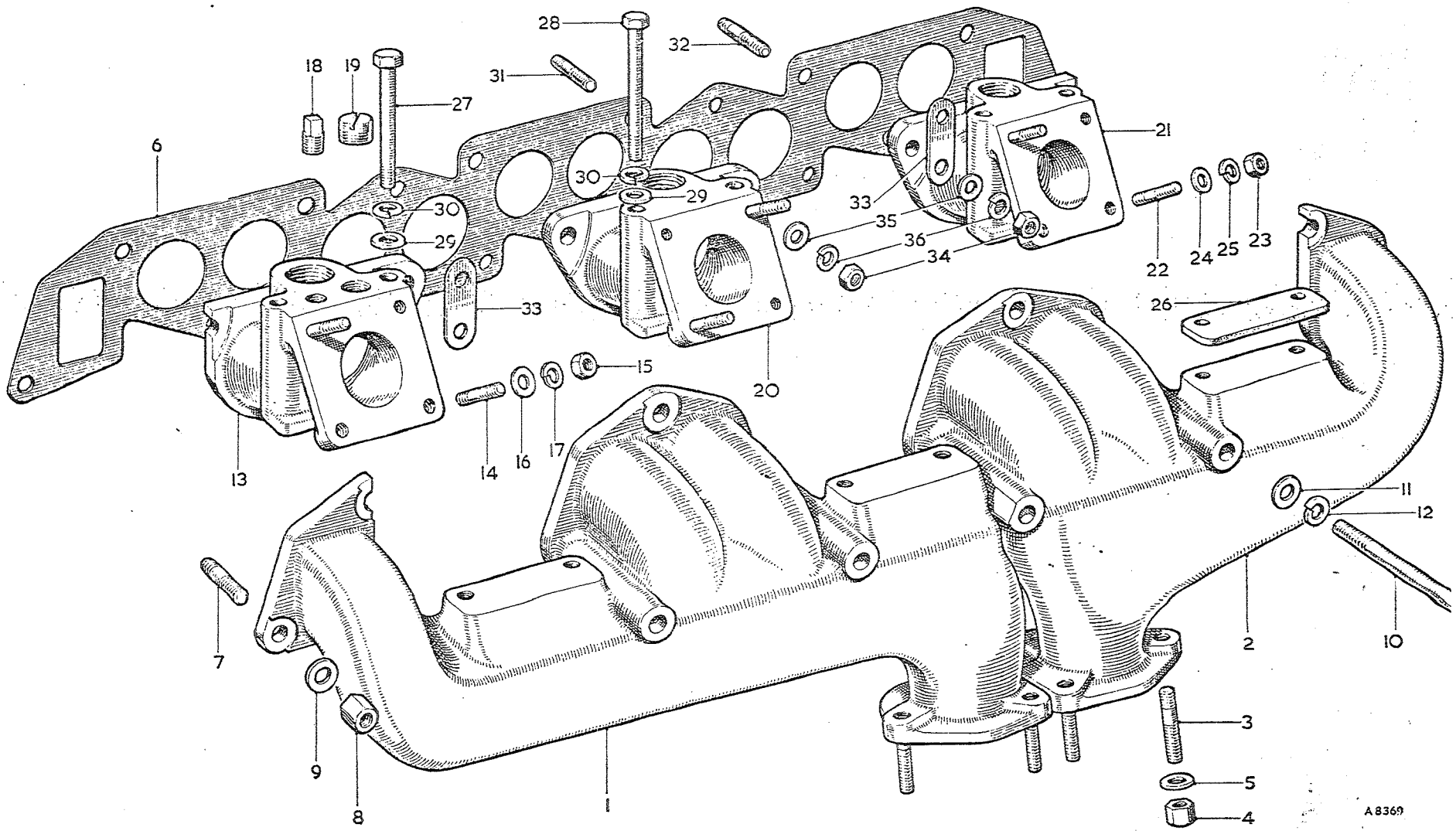

To face page A.20

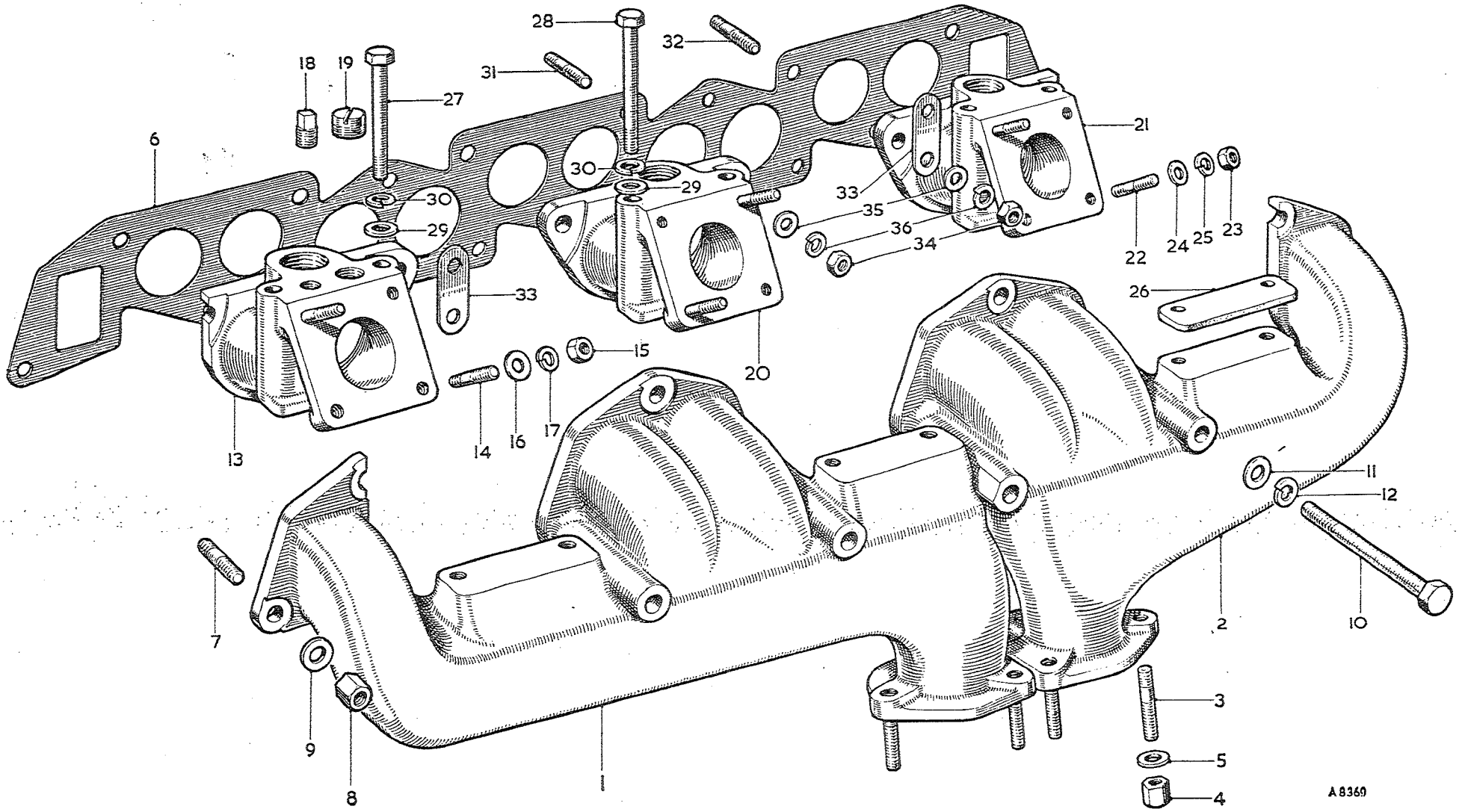

To face page A.21

Item No.	DESCRIPTION	Commencing (E) 29D-H101 Part Number	Illus. No.	Quantity	MODIFICATIONS New Part Number	MODIFICATIONS Change Point	REMARKS
	Inlet and Exhaust Manifold—*continued*						
1	Joint—inlet to exhaust manifold		26	3	AEC2056	Com. (E) 29E-H101	
					AEC2147	Com. (E) 29E-H1845	
2	Bolt—short—inlet to exhaust manifold		27	4	HBZ0528		
3	Bolt—long—inlet to exhaust manifold		28	2	HBZ0530		
4	Washer—plain—bolt		29	6	PWZ105		
5	Washer—spring—bolt		30	6	LWZ205		
6	Stud—short—inlet manifold to cylinder head		31	5	51K562	Com. (E) 29E-H101	
7	Stud—long—inlet manifold to cylinder head		32	2	53K563		
8	Clip—retainer—thermo capillary pipe		33	2	AHB5397		
9	Nut—stud		34	7	FNZ106		
10	Washer—plain—stud		35	7	PWZ106		
11	Washer—spring—stud		36	7	LWZ206		

Item No.	DESCRIPTION	Commencing (C) 101 Part Number	Illus. No.	Quantity	MODIFICATIONS New Part Number	MODIFICATIONS Change Point	REMARKS
	ENGINE MOUNTINGS						
1	Bracket—engine mounting—front	11B5188	1	2			
2	Screw—bracket to side-member	HZS0607	2	8			
3	Washer—plain—screw	PWZ106	4	8			
4	Washer—spring—screw	LWZ306	3	8			
5	Bracket—mounting—rubber to crankcase RH	AEC889		1			
6	Bracket—mounting—rubber to crankcase LH	AEC890	5	1			
7	Setscrew—bracket to crankcase	HZS0606	6	8			
8	Washer—plain—setscrew	PWZ106	8	8			
9	Washer—spring—setscrew	LWZ206	7	8			
10	Rubber—engine mounting—front	1B4423	9	2	ACB9407		1B4423 not available; use ACB9407
11	Nut—mounting to bracket	FNZ107	10	8			
12	Washer—spring—nut	LWZ207	11	8			
13	Rubber—rebound—engine mounting—front	1B4428	12	2			
14	Packing piece—rebound rubber	1B1314	13	A/R			
15	Packing piece—rebound rubber	1B1315	14	A/R			
16	Nut—rebound rubber to bracket	FNZ105	15	2			
17	Washer—spring—nut	LWZ205	16	2			
18	Bracket—rebound rubber	1B4422	17	2			
19	Bracket—engine mounting RH—rear	11B5113	18	1			
20	Bracket—engine mounting LH—rear	11B5115	19	1			
21	Setscrew—bracket to frame	HZS0505	20	6			
22	Washer—plain—setscrew	PWZ105	22	6			
23	Washer—spring—setscrew	LWZ205	21	6			
24	Bush—rubber—gearbox rear cover	1B8347	23	2			
25	Rubber—engine mounting—rear	11B5074	24	2			
26	Nut—mounting bolt	FNZ105	25	2			
27	Washer—spring—nut	LWZ205	26	2			
28	Rubber—rebound—engine mounting—rear	1A9209	27	1			
29	Shim—rebound rubber	1A9211	28	A/R			
30	Setscrew—rebound rubber to gearbox rear cover	HZS0405	29	2			
31	Washer—spring—setscrew	LWZ304	30	2			
32	Setscrew—mounting to gearbox rear cover	HZS0506	31	4			
33	Washer—spring—setscrew	LWZ205	32	4			
34	Tie-rod—engine	1G9382	33	1			
35	Bush—rubber—tie-rod	1B8832	34	2			
36	Nut—tie-rod	FNZ206	35	4			
37	Washer—nut	PWZ206	36	2			Part No. change; was 1B8811
38	Washer—shakeproof—nut	LWN406	37	2			Part No. change; was 2K7131 and LWN606
39	Pin—hinge—tie-rod to gearbox extension	1G9384	38	1			
40	Nut—hinge pin	FNZ106	39	1			
41	Washer—spring—nut	LWZ306	40	1			

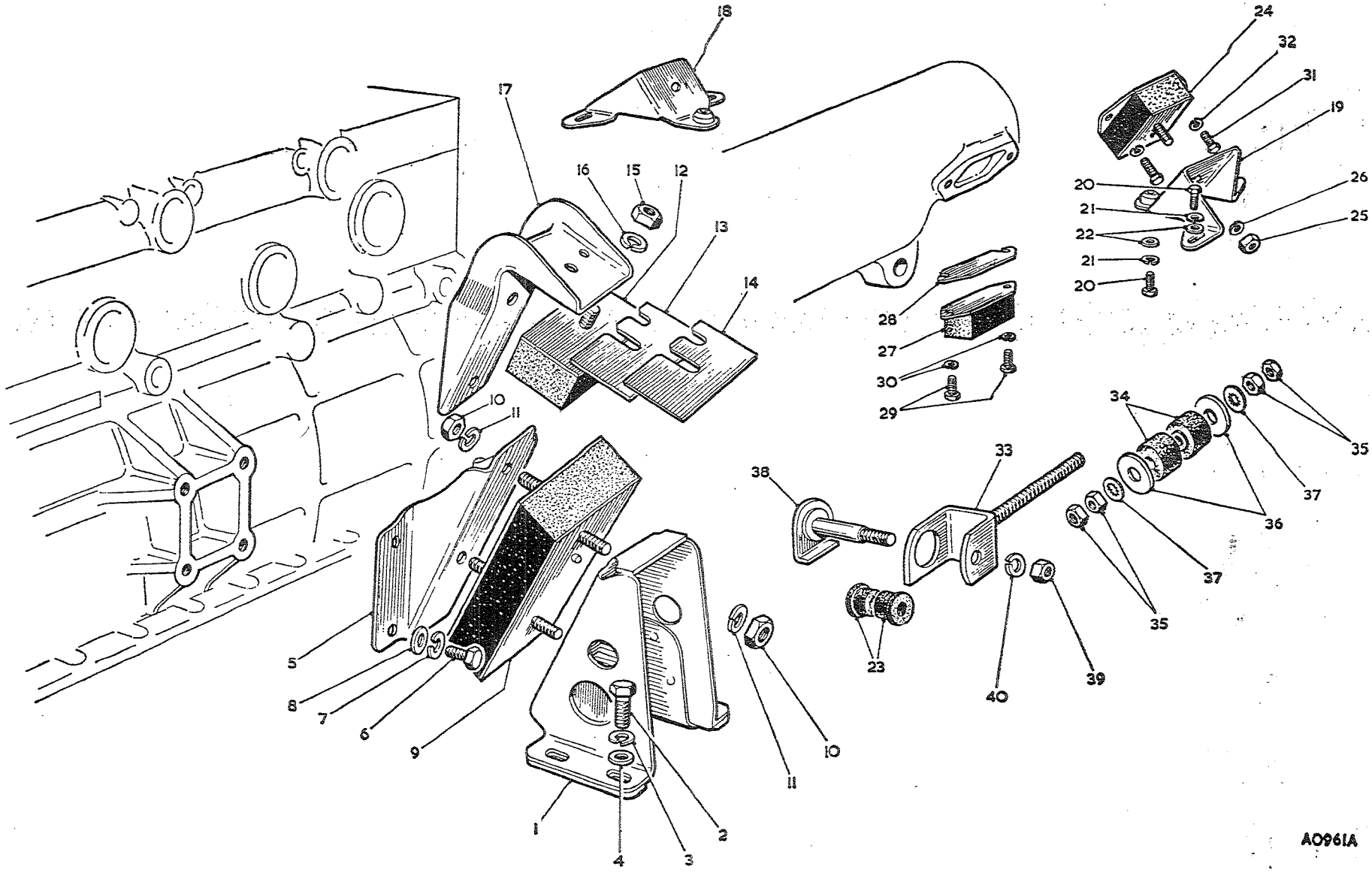

To face page A.22

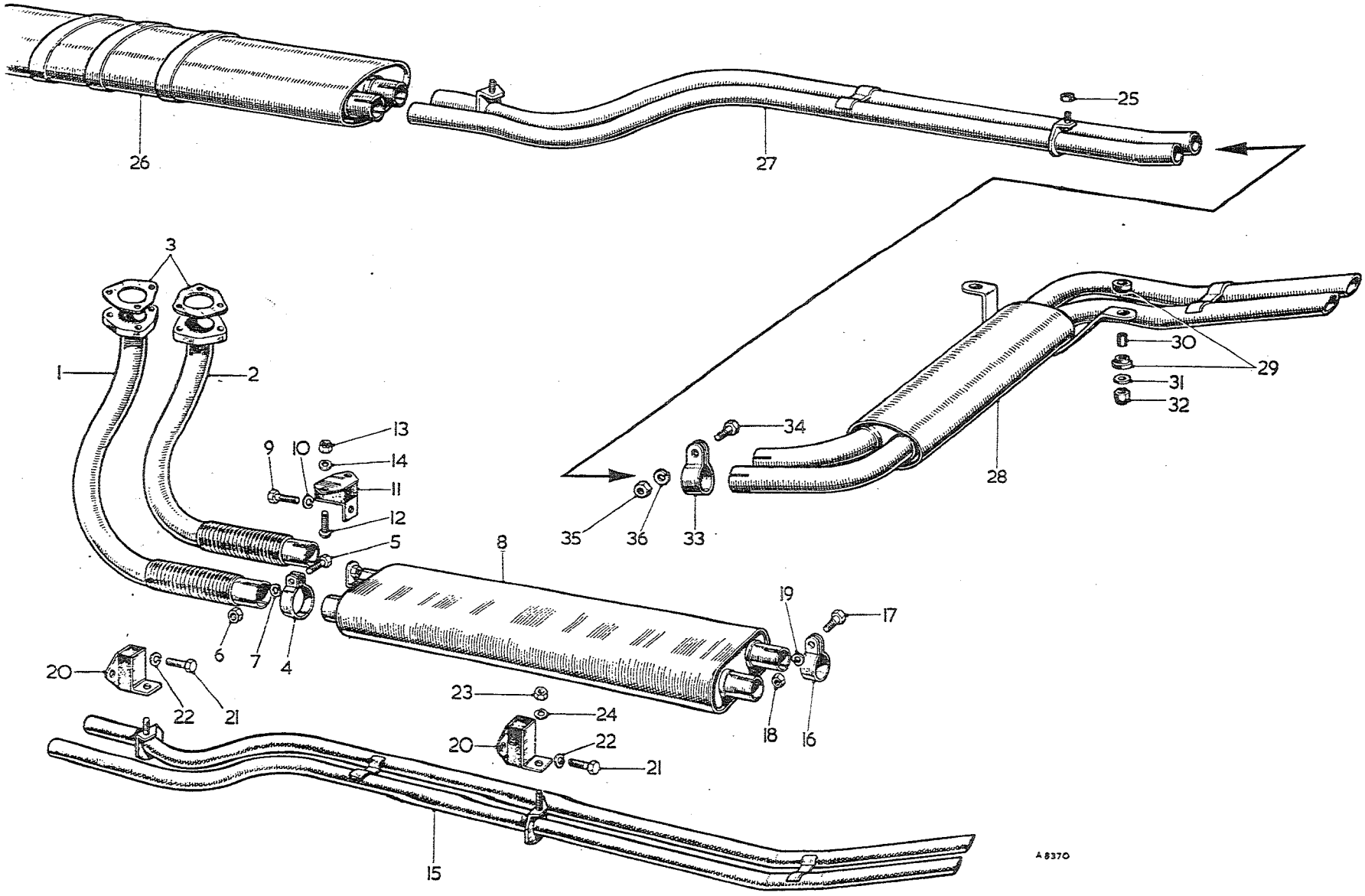

To face page A.23

Item No.	DESCRIPTION	Commencing (C) 101 Part Number	Illus. No.	Quantity	MODIFICATIONS New Part Number	MODIFICATIONS Change Point	REMARKS
	EXHAUST SYSTEM						
1	Pipe assembly—front—outer	11B2120	1	1			
2	Pipe assembly—front—inner	11B2122	2	1			
3	Gasket—pipe to manifold	ACC5137	3	2			
4	Clip—pipe to silencer	1K618	4	2			
5	Bolt—clip	HZS0507	5	2			
6	Nut—bolt	FNZ105	6	2			
7	Washer—spring—nut	LWZ205	7	2			
8	Silencer assembly	11B2356	8	1			
9	Bolt—silencer to mounting assembly	HZS0506	9	1			
10	Washer—spring—bolt	LWZ205	10	1			
11	Mounting—silencer—front	3H3076	11	1	AHB8993	Com. (C) 14668	
12	Screw—mounting to frame	PMZ0510	12	2			
13	Nut—screw	FNZ105	13	2			
14	Washer—spring—nut	LWZ205	14	2			
15	Pipe assembly—tail	11B2357	15	1			
16	Clip—pipe to silencer	DMK5418	16	2			
17	Bolt—clip	HZS0607	17	2			Part No. change; was 1K7
18	Nut—bolt	FNZ106	18	2			
19	Washer—spring—nut	LWZ306	19	2			
20	Mounting—silencer and tail pipe—rear	3H3076	20	2	AHB8993	Com. (C) 14668	
21	Bolt—mounting to frame	HZS0506	21	4			
22	Washer—spring—bolt	LWZ205	22	4			
23	Nut—tail pipe to mounting	FNZ105	23	2			
24	Washer—spring—nut	LWZ205	24	2			
25	Distance piece—rear exhaust mounting bracket to mounting		25	1	AHB8996	Com. (C) 14668	
26	Silencer assembly—primary—front		26	1	AHB9389		
27	Pipe assembly—front silencer to rear silencer		27	1	AHB8976		
28	Silencer and tail pipe assembly—secondary—rear		28	1	AHB8975		
29	Bush—rubber—rear silencer support		29	4	AHA5689		
30	Spacer—bush		30	2	AHA5690		
31	Washer—plain		31	2	PWZ205	Com. (C) 13601	
32	Locknut—rear silencer to boot floor **Not UK**		32	2	LNZ205		Alternatives
33	Locknut—rear silencer to boot floor		32	2	LNZ105		Part No. change; was 1K71
34	Clip—rear silencer to pipe		33	2	DMK5418		
35	Screw—clip		34	2	HZS0607		
36	Nut—screw		35	2	FNZ106		
37	Washer—spring—nut		36	2	LWZ306		

Item No.	DESCRIPTION		Commencing (C) 101 Part Number	Illus. No.	Quantity	MODIFICATIONS New Part Number	MODIFICATIONS Change Point	REMARKS
	ENGINE CONTROLS							
1	**Pedal—accelerator**	RHD	**11B2151**	1	1	**AHB9194**	**Com. (C) 15104**	**11B2151 not available; use AHB9194**
						AHB9190	**Com. (C) 16039 BN7, 15881 BT7**	
2	Collar—pedal rod		11B2207	2	1			
3	Washer—collar		6K467	3	1			
4	Washer—pedal rod		PWN106	4	1			
5	~~Pedal—accelerator~~	LHD	**11B2143**	5	1	**AHB9037**	**Com. (C) 13751**	
						AHB9195	**Com. (C) 15104**	
						AHB9188	**Com. (C) 16039 BN7, 15881 BT7**	
6	~~Washer—pedal rod~~		PWN106		1			
7	Support—accelerator shaft		1F657	70	1			
8	Screw—support to pedal box		PMZ0410	71	2			
9	Washer—spring—screw		LWZ304	72	2			
10	Bush—felt—accelerator shaft		1A1832	6	1		Fin. (C) 7636 RHD, 7435 LHD (BN7); 7192 RHD, 7189 LHD (BT7)	For 1A1832 use AHB8950 for this application
11	Bush and housing assembly—accelerator shaft				1	AHB8950	Com. (C) 7637 RHD, 7436 LHD (BN7); 7193 RHD, 7190 LHD (BT7)	
12	Cup—bush—accelerator shaft	RHD	1H55	7	1			
13	Spring—accelerator pedal		1G2697	8	1			
14	~~Spring—pedal return~~	LHD	11B2146	9	1			
15	Collar—return spring location		1F1293	10	1			
16	~~Washer—return spring location~~		6K467	11	1			
17	Lever—pedal shaft		11B2145	12	1	AHB9193	Com. (C) 15104	11B2145 not available; use AHB 9193 together with 1 off HZS0508 screw, 1 off FNZ105 nut and 1 off LWZ205 washer
18	Screw—lever to pedal shaft		HZS0409	13	1	HZS0508		
19	Nut—screw		FNZ104	14	1	FNZ105		
20	Washer—plain—nut		PWZ104	15	2		Fin. (C) 15103	
21	Washer—spring—nut				1	LWZ205	Com. (C) 15104	
22	Washer—plain—accelerator shaft		PWN106	16	1			

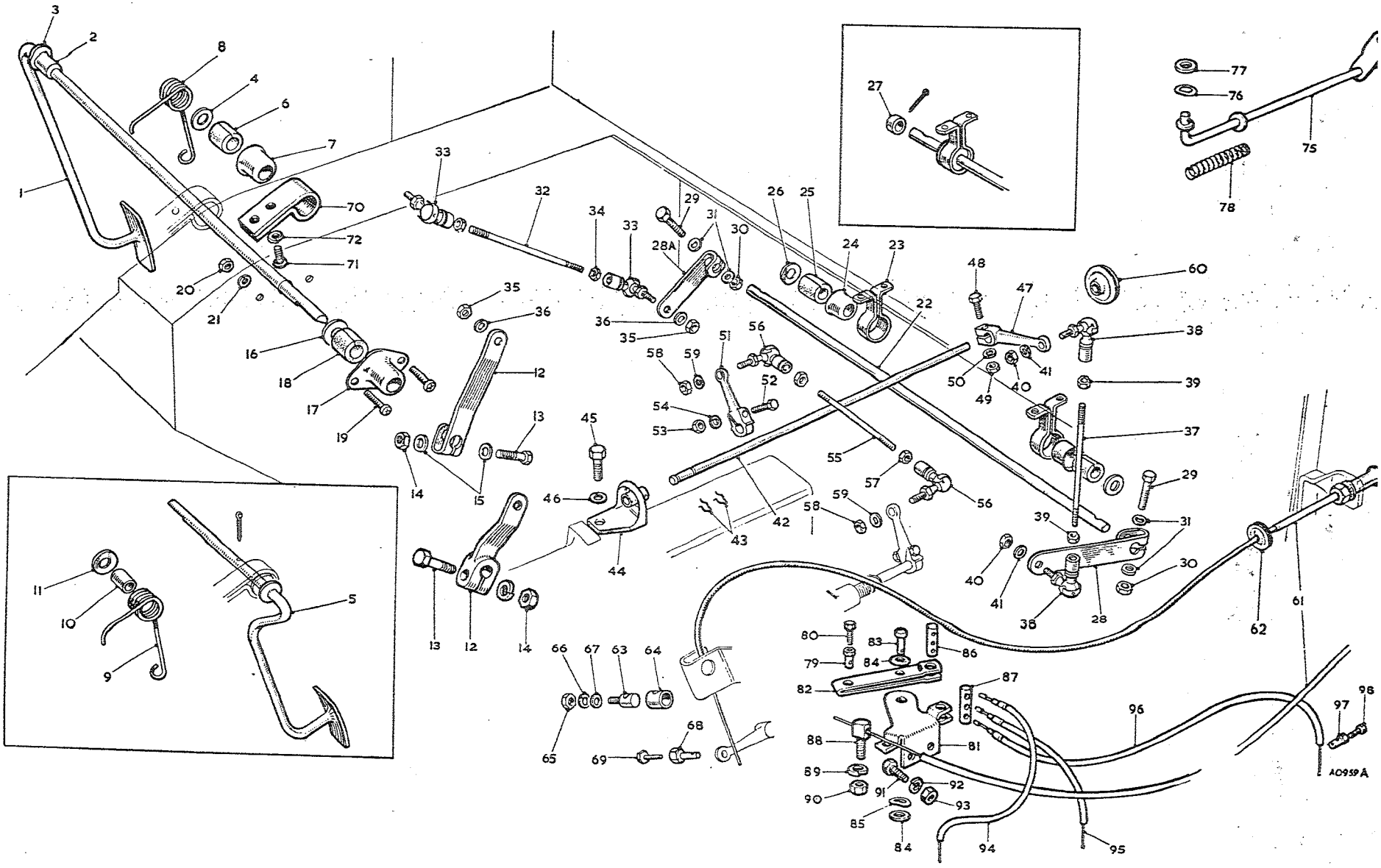

To face page A.24

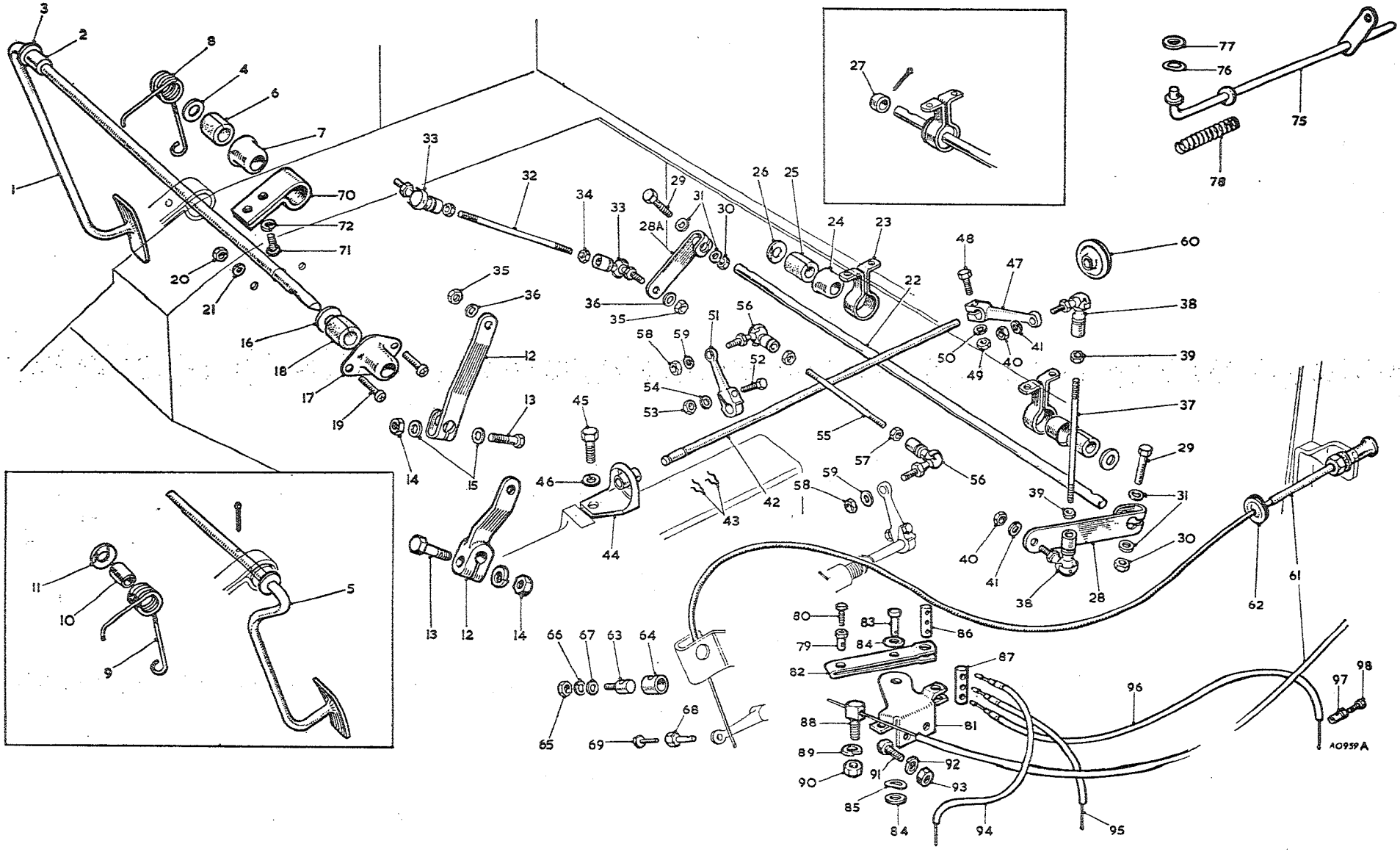

To face page A.25

Item No.	DESCRIPTION	Commencing (C) 101 Part Number	Illus. No.	Quantity	MODIFICATIONS New Part Number	MODIFICATIONS Change Point	REMARKS
	Engine Controls—*continued*						
1	Bush—accelerator shaft (felt)	1A1832	18	1		Fin. (C) 5145 BN7, 4888 BT7	For 1A1832 use AHB8748 for this application
2	Bush—accelerator shaft (nylon)			1	AHB8748	Com. (C) 5146 BN7, 4889 BT7	
3	Bush and housing assembly—accelerator shaft			1	AHB9021	Fin. (C) 13750 Com. (C) 13751	
4	Cup—bush—accelerator shaft	21B670	17	1			Part No. change; was 2F115
5	Screw—felt cup to pedal box	PMZ0306	19	2			
6	Nut—screw	FNZ103	20	2			
7	Washer—spring—nut	LWZ303	21	2			
8	Shaft—accelerator relay	11B2155	22	1		Fin. (C) 14377	
9	Bracket—mounting	11B2159	23	2			
10	Bush—felt—accelerator relay	1A1832	25	2		Fin. (C) 7636 RHD, 7435 LHD — BN7 7192 RHD, 7189 LHD — BT7	For 1A1832 use AHB8950 for this application
11	Bush and housing assembly—accelerator relay shaft			2	AHB8950	Com. (C) 7637 RHD, 7436 LHD — BN7 7193 RHD, 7190 LHD — BT7	
12	Cup—bush—accelerator relay shaft	1H55	24	2			
13	Washer—plain—accelerator relay shaft	PWZ106	26	2			
14	Collar—accelerator relay shaft LHD	1A1829	27	1			
15	Lever—short—accelerator relay shaft	11B2156	28A	1		Fin. (C) 14377 LHD only	
16	Lever—long—accelerator relay shaft	11B2157	28	1		Fin. (C) 14377	
17	Bolt—lever to relay shaft	HZS0409	29	2/1			
18	Nut—bolt	FNZ104	30	2/1			Quantity reduced at (C) 14378
19	Washer—plain—nut	PWZ104	31	4/2			
20	Shaft assembly—accelerator relay RHD			1	AHB9205	Com. (C) 14378	
21	Shaft assembly—accelerator relay LHD			1	AHB9204		
22	Rod—control—pedal to relay shaft	AHB5367	32	1	AHB9050	Com. (C) 13751	
23	Joint—ball	ACB5311	33	2			
24	Nut—lock—ball joint to control	FNZ103	34	2			
25	Nut—ball joint at lever	FNZ103	35	2			
26	Washer—spring—nut	LWZ203	36	2			

Item No.	DESCRIPTION	Commencing (C) 101 Part Number	Commencing (C) 101 Illus. No.	Quantity	MODIFICATIONS New Part Number	MODIFICATIONS Change Point	REMARKS
	Engine Controls—*continued*	AHB5370	37	1		Fin. (C) 13750	
1	Rod—control—relay shaft to throttle shaft			1	AHB9050	Com. (C) 13751	
2	Rod—control—relay shaft to accelerator spindle	ACB5311	38	2			
3	Joint—ball	FNZ103	39	2			
4	Nut—lock—ball joint to control rod	FNZ103	40	2			
5	Nut—ball joint at lever	LWZ203	41	2			
6	Washer—spring—nut	11B2349	42	1			
7	Shaft—throttle relay	11B2350	43	2			
8	Circlip—throttle relay shaft	11B2348	44	1			
9	Bracket—relay shaft bearing	ZCS0505	45	1			
10	Screw—bearing bracket to induction manifold	LWZ205	46	1			
11	Washer—spring—screw	AUC3481	47	1			
12	Lever—throttle relay shaft	53K128	48	1			
13	Screw—lever to throttle relay shaft	FNZ103	49	1			
14	Nut—screw	LWZ303	50	1		Fin. (C) 13750	
15	Washer—spring—nut	AUC1196	51	1			
16	Lever—grooved end—throttle relay shaft	53K128	52	1			
17	Screw—lever to throttle relay shaft	FNZ103	53	1			
18	Nut—screw	LWZ303	54	1			
19	Washer—spring—nut	AHB5372	55	1			
20	Rod—control—throttle relay shaft to carburetter	ACB5311	56	2			
21	Joint—ball	FNZ103	57	2			
22	Nut—lock—ball joint to control rod	FNZ103	58	2			
23	Nut—ball joint to lever	LWZ303	59	1			
24	Washer—spring—nut	1G2175	60	1			
25	Bearing—throttle relay shaft in dash					Fin. (C) 7636 RHD, 7435 LHD — BH7; 7192 RHD, 7189 LHD — BT7	For 1G2175 use AHB8944 for this application
26	Bearing assembly—throttle relay in dash			1	AHB8944	Com. (C) 7637 RHD, 7436 LHD — BN7; 7193 RHD, 7190 LHD — BT7	
27	Spindle assembly—accelerator		75	1	AHB9041	Com. (C) 13751	
28	Washer—anti-rattle		76	1	AWZ105		
29	Washer—plain		77	1	PWZ105		
30	Spring		78	1	ACH8508		

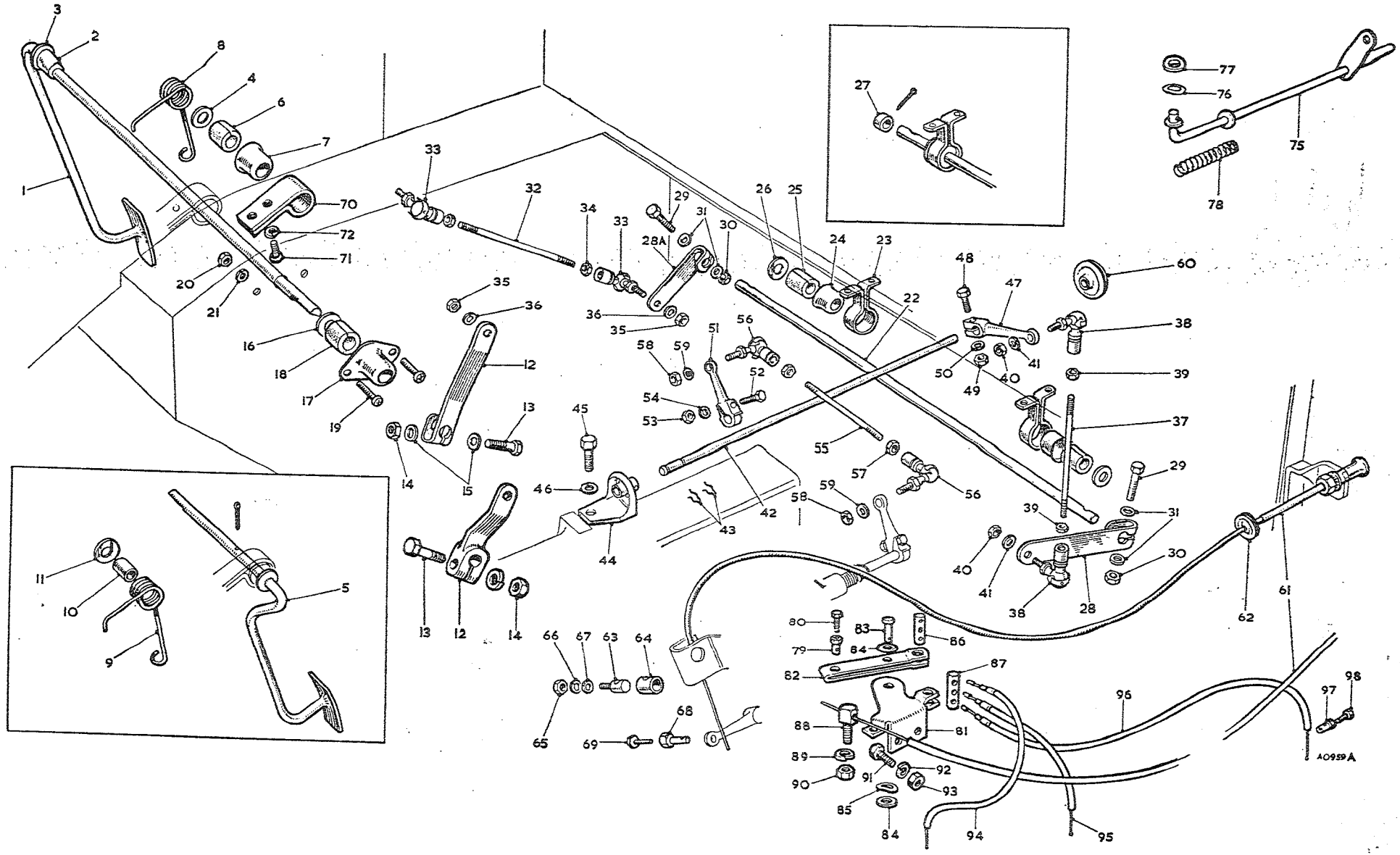

To face page A.26

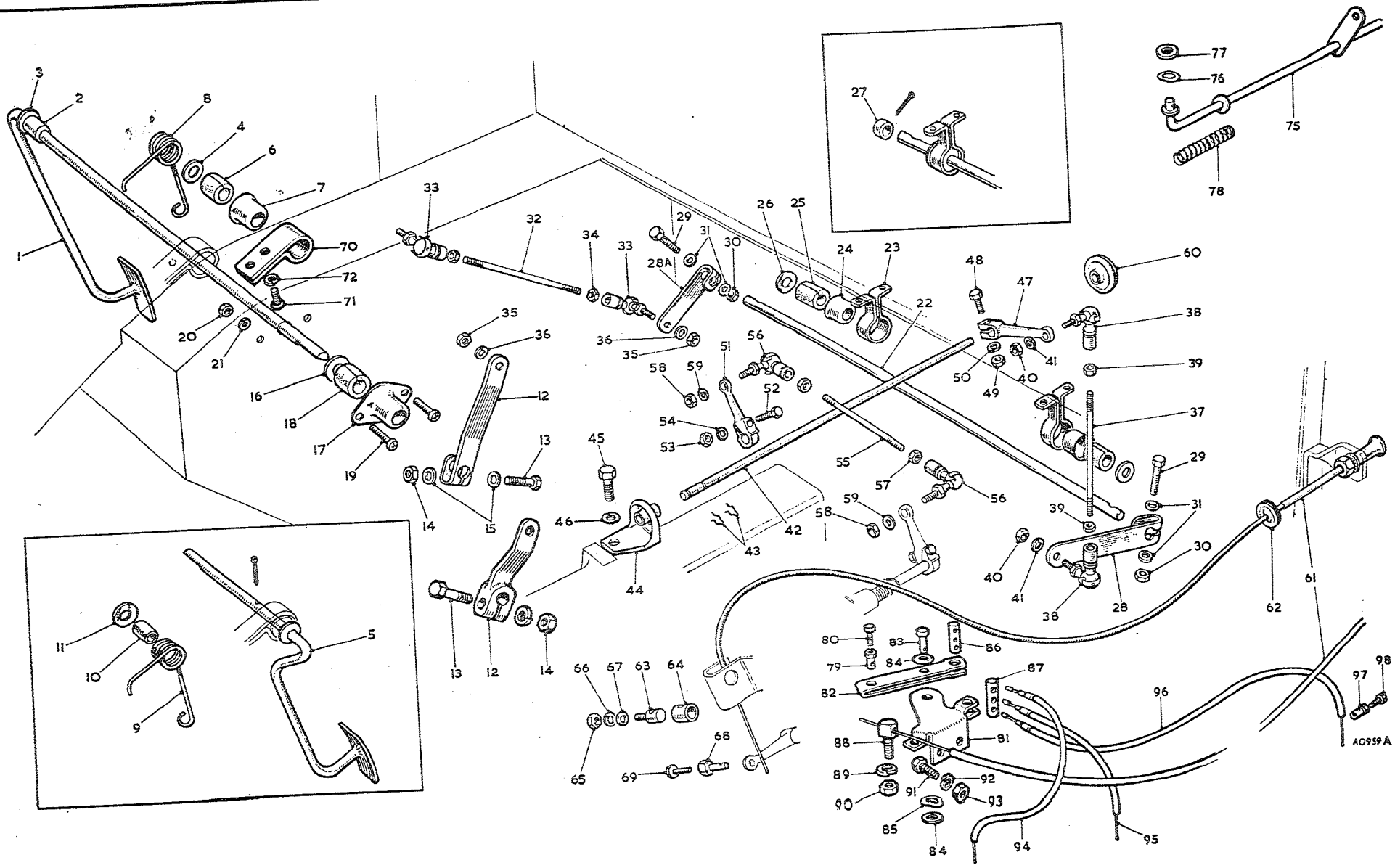

To face page A.27

Item No.	DESCRIPTION	Commencing (C) 101 Part Number	Commencing (C) 101 Illus. No.	Quantity	MODIFICATIONS New Part Number	MODIFICATIONS Change Point	REMARKS
	Engine Controls—*continued*						
1	Control—choke	11B2352	61	1		Fin. (C) 2193; also 2446, 2457	
2	Control—choke			1	BHA4152	Com. (C) 5234 BN7, 5310 BT7	
					AHB9057	Com. (C) 13751	
3	Grommet—choke	RFN403	62	1		Fin. (C) 2193; also 2446, 2457	
						Com. (C) 5234 BN7, 5310 BT7	
4	Trunnion—inner—choke cable	11B2365	63	1			
5	Trunnion—outer—choke cable	11B2366	64	1			
6	Nut—inner trunnion	FNZ103	65	1		Fin. (C) 2193; also 2446, 2457	
7	Washer—plain—nut	PWZ203	67	1		Com. (C) 5234 BN7, 5310 BT7	
8	Washer—spring—nut	LWZ303	66	1		Fin. (C) 13750	
9	Trunnion—choke lever and connecting wire	1B2697	68	1			
10	Bolt—trunnion	53K1023	69	1			
11	Pin—choke control cable to coupling		79	1	ACH9042		
12	Screw—pin to cable		80	1	ACA5453		
13	**Coupling assembly—choke control**			1	**NSP**		
14	Body		81	1	AHB9054		
15	Lever		82	1	AHB9055		
16	Pin—clevis		83	1	CLZ0409		
17	Washer—plain		84	2	PWZ104		
18	Washer—anti-rattle		85	1	~~AWZ104~~	AWN 104 (P/17 16)	
19	Barrel—inner cable		86	1	AHB9043		
20	Barrel—outer cable		87	1	AHB9042	Com. (C) 13751	
21	Abutment—cable		88	1	ACH5112		
22	Washer—spring		89	1	LWZ203		
23	Nut		90	1	FNZ103		
24	Screw—coupling to balance pipe		91	2	HZS0404		
25	Washer—spring—screw		92	2	LWZ204		
26	Nut—screw		93	2	FNZ104		
27	Cable—choke control—front		94	1	AHB9044		
28	Cable—choke control—centre		95	1	AHB9045		
29	Cable—choke control—rear		96	1	AHB9046		
30	Pin—cable to carburetter		97	3	ACH9042		
31	Screw—pin to cable		98	3	ACA5453		

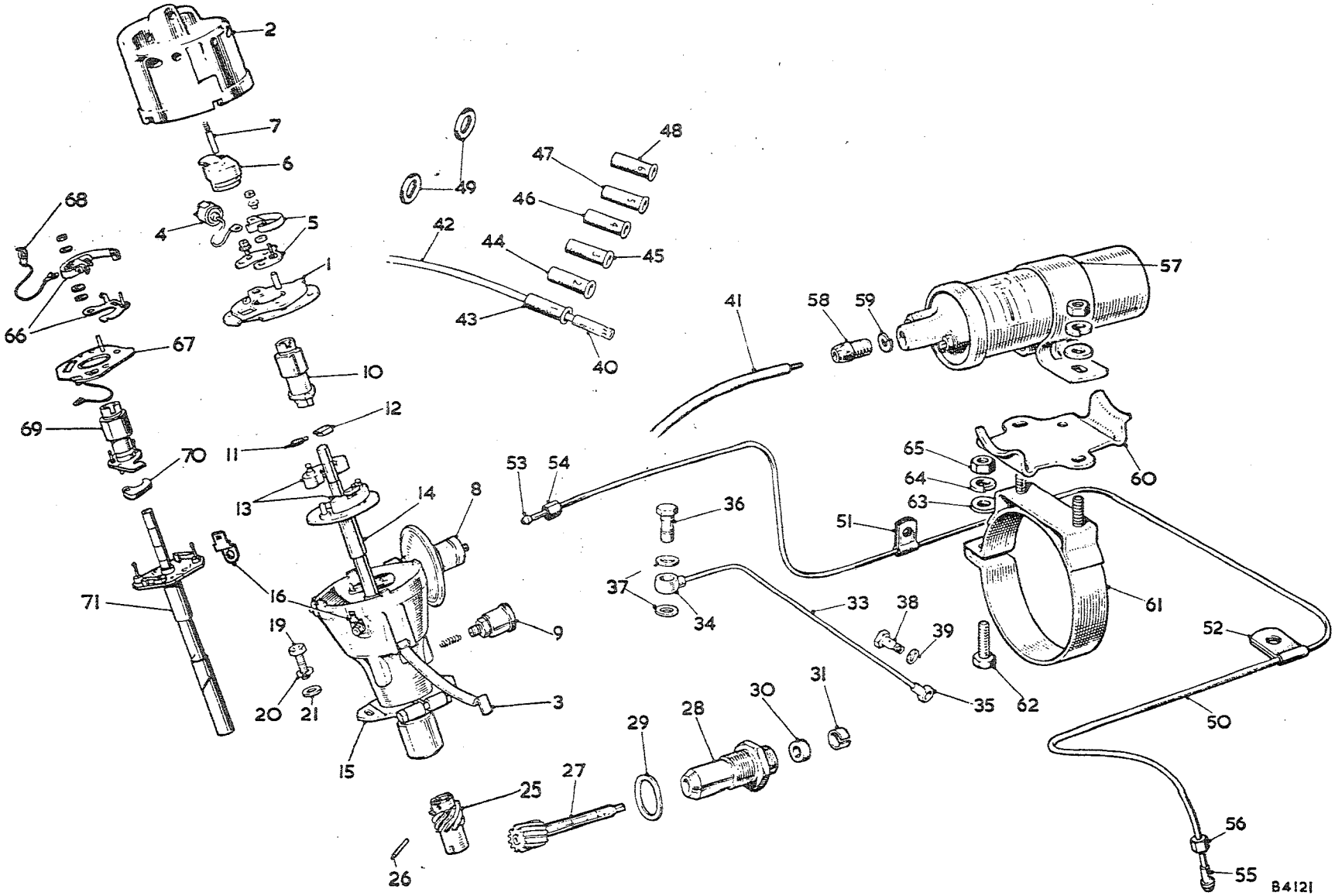
2
7
6
68
4
5
1
66
67
10
69
12
11
70
13
14
8
71
16
19
9
20
21
3
15
25
27
29
28
30
31
26
49
48
47
46
42
44
45
43
40
41
58
59
57
53
54
36
65
64
63
60
51
37
34
33
38
39
61
52
35
62
50
56
55
B4121

Item No.	DESCRIPTION	Commencing (E) 29D-H101 Part Number	Illus. No.	Quantity	MODIFICATIONS New Part Number	MODIFICATIONS Change Point	REMARKS
	IGNITION EQUIPMENT						
	DISTRIBUTOR						
1	**Distributor**	**AEJ25**		1			**Not available; use 12B823 for this application**
2	**Cover**	**17H5158**	2	1			
3	Brush and spring	17H5065	7	1			
4	Arm—rotor	17H5110	6	1			
5	Condenser	47H5250	4	1			
6	Contacts	17H5243	5	1 set			
7	Plate—contact breaker base	17H5437	1	1			
8	Cam	17H5113	10	1			
9	Spring—auto advance	27H5316	11	1			
10	Toggle—spring	17H5069	12	2			
11	Weight	17H5095	13	2			
12	Shaft and action plate	17H5166	14	1			
13	Vacuum unit	17H5384	8	1	57H5241		17H5384 not available; use 57H5241 Part No. change; was 57H5041
14	Connector—Lucas (14 amp.)	AUA692	16	1			
15	Lubricator	AJC5095	9	1			
16	Clip—cover	37H5445	3	2			
17	**Plate—fixing**	**3H2138**	15	1			
18	Screw—clamping	37H5063		1			
19	Sundry parts	17H5117		1 set			
20	**Distributor**			1	**12B823**	40920 D/E Lucas	
21	**Cover**			1	**17H8844**		
22	Brush and spring		7	1	17H5065		
23	Arm—rotor		6	1	17H5110		
24	Condenser		4	1	47H5250		
25	Contacts		66	1 set	17H5423		
26	Plate—contact breaker base		67	1	17H5469		
27	Lead—earth		68	1	17H5531		
28	Cam		69	1	57H5488		
29	Spring—auto advance		11	1	57H5490		
30	Weight		70	2	57H5420		
31	Shaft and action plate		71	1	57H5050		
32	Vacuum unit		8	1	17H6865		
33	Clip—cover		3	2	17H2392		
34	**Plate—fixing**		15	1	**3H2138**		
35	Screw—clamping WITH NUT			1	37H5063		
36	Sundry parts			1 set	17H5117		DAU 2550
37	Screw—distributor to housing	HZS0404	19	2			
38	Washer—spring—screw	LWZ204	20	2			
39	Washer—plain—screw	PWZ104	21	2			

Item No.	DESCRIPTION	Commencing (E) 29D-H101 Part Number	Illus. No.	Quantity	MODIFICATIONS New Part Number	MODIFICATIONS Change Point	REMARKS
	DISTRIBUTOR AND TACHOMETER DRIVE						
1	Gear—tachometer driving	AEC679	25	1			
2	Peg—gear	2K2163	26	1			
3	Pinion—tachometer	AEC680	27	1			
4	Bush—pinion	AEC701	28	1			
5	Joint—bush to housing	2K4970	29	1			
6	Seal—oil—pinion	3H964	30	1			
7	Ring—oil seal retaining	1G3410	31	1			
8	**Pipe—oil feed—tachometer drive**	**AEC687**	33	1			
9	Union—banjo—tachometer drive end	1K21	34	1			
10	Union—banjo—crankcase end	11B174	35	1			
11	Bolt—banjo union—tachometer drive end	AEC796	36	1			
12	Washer—bolt	6K56	37	1			
13	Bolt—banjo union—crankcase end	AEC682	38	1			
14	Washer—bolt	11B206	39	2			
	IGNITION CABLES						
15	Terminal—sparking plug	8G616	40	6			
16	Cable—coil to distributor—11″ (27·94 cm.)	AAA5981	41	A/R			Only available in multiples of feet. Part No. change; was 45223
17	Cable—No. 1—13½″ (34·29 cm.)	AAA5981	42	A/R			
18	Cable—No. 2—12″ (30·48 cm.)	AAA5981		A/R			
19	Cable—No. 3—9″ (22·86 cm.)	AAA5981		A/R			
20	Cable—No. 4—11″ (27·94 cm.)	AAA5981		A/R			
21	Cable—No. 5—11½″ (29·21 cm.)	AAA5981		A/R			
22	Cable—No. 6—16″ (40·64 cm.)	AAA5981		A/R			
23	Ferrule—cable—No. 1 (rubber)	3H1655	43	1			
24	Ferrule—cable—No. 2 (rubber)	3H1656	44	1			
25	Ferrule—cable—No. 3 (rubber)	3H1657	45	1			
26	Ferrule—cable—No. 4 (rubber)	3H1658	46	1			
27	Ferrule—cable—No. 5 (rubber)	3H1659	47	1			
28	Ferrule—cable—No. 6 (rubber)	3H1660	48	1			
29	Ring—cable (rubber)	2H35	49	2			

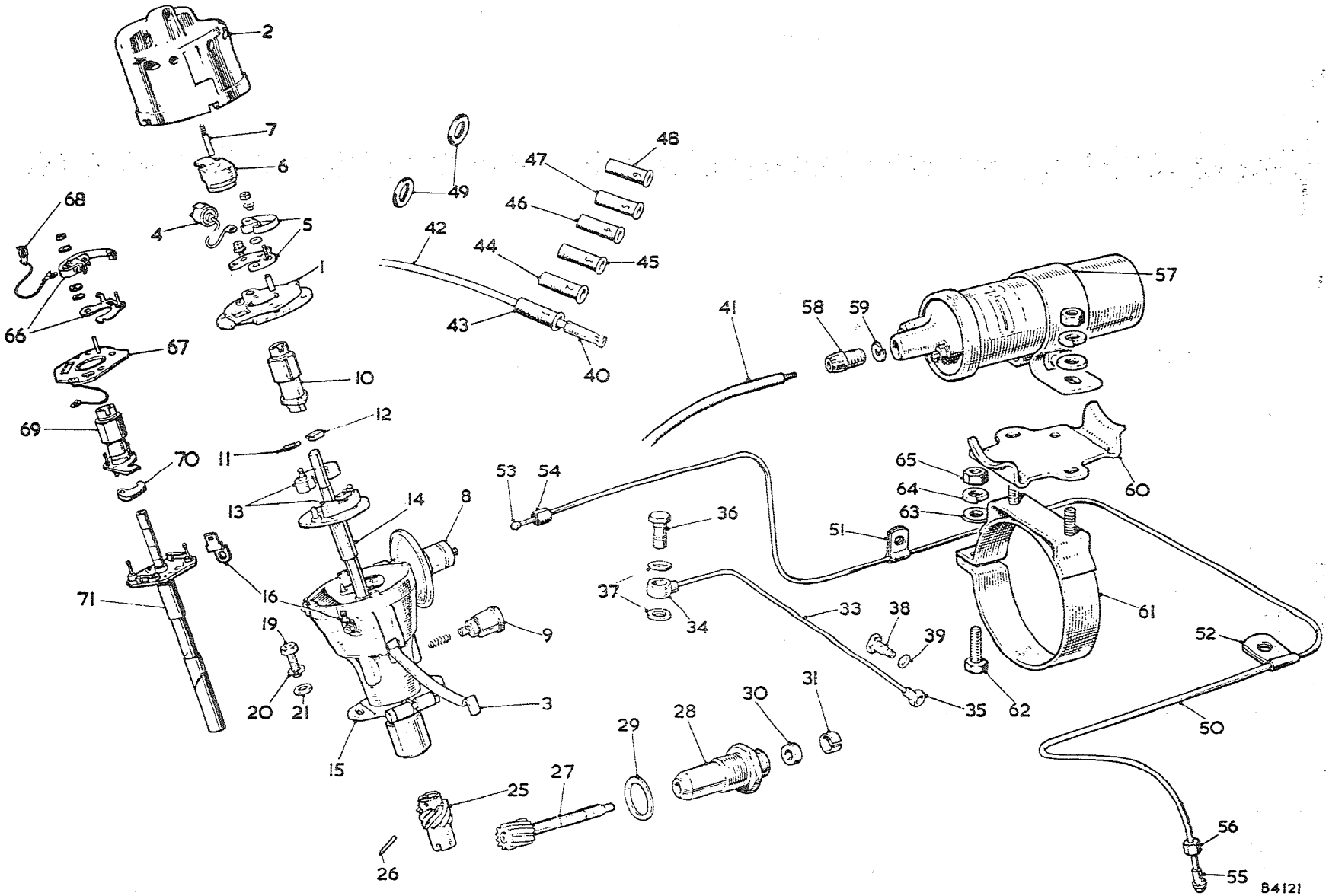

To face page B.2

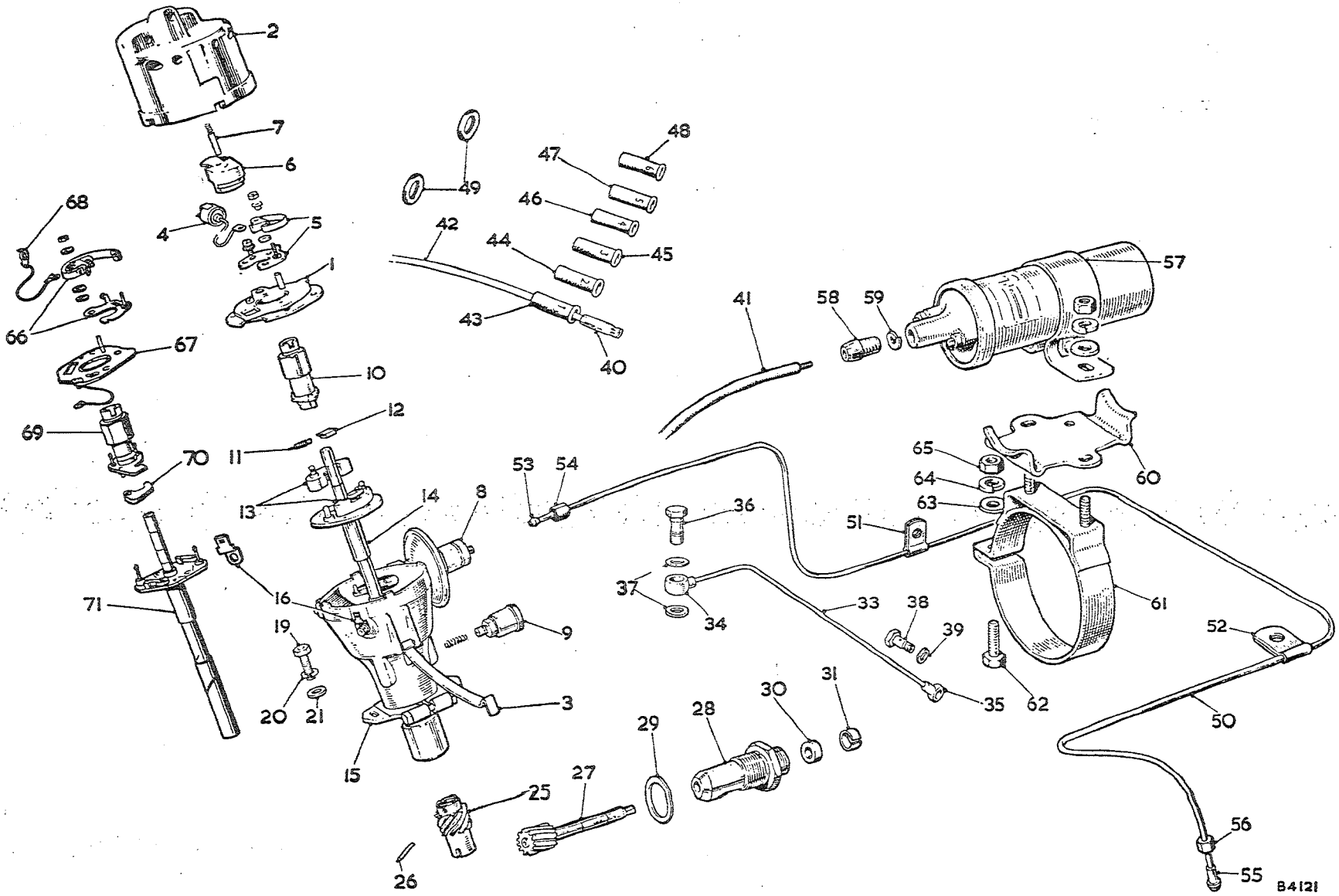

To face page B.3

Item No.	DESCRIPTION	Commencing (E) 29D-H101 Part Number	Illus. No.	Quantity	MODIFICATIONS New Part Number	MODIFICATIONS Change Point	REMARKS
	VACUUM CONTROL PIPE						
1	**Pipe—ignition control**	**AEC416**	50	1	**AEC2085**	**Com. (E) 29E-H101**	
2	Clip—small	2H3271	51	1			
3	Clip—large	1K204	52	1			
4	Olive	6K649	53	1			
5	Nut—distributor end	6K650	54	1			
6	Nipple	2K6192	55	1		Fin. (E) 29D-H26212	
7	Nut—carburetter end	2K6193	56	1			
8	Connection—carburetter end (rubber) PIPE - IGNITION CONTROL	12B592		1	ACH9041	Com. (E) 29E-H101 BJ7 - OUTSET. (2099)	
	IGNITION COIL						
9	**Coil—ignition**	**BCA4309**	57	1			
10	Nut—H.T. terminal	3H2695	58	1			
11	Washer—H.T. terminal	3H2696	59	1			
12	Plate—steady—coil	2A537	60	1	11G221		2A537 not available; use 11G221
13	Bracket—coil to dynamo	AEC496	61	1			
14	Screw—bracket clamping	HZS0408	62	1			
15	Washer—plain—clamp and bracket screw	PWZ204	63	3			
16	Washer—spring—clamp and bracket screw	LWZ204	64	3			
17	Nut—clamp and bracket screw	FNZ104	65	3			

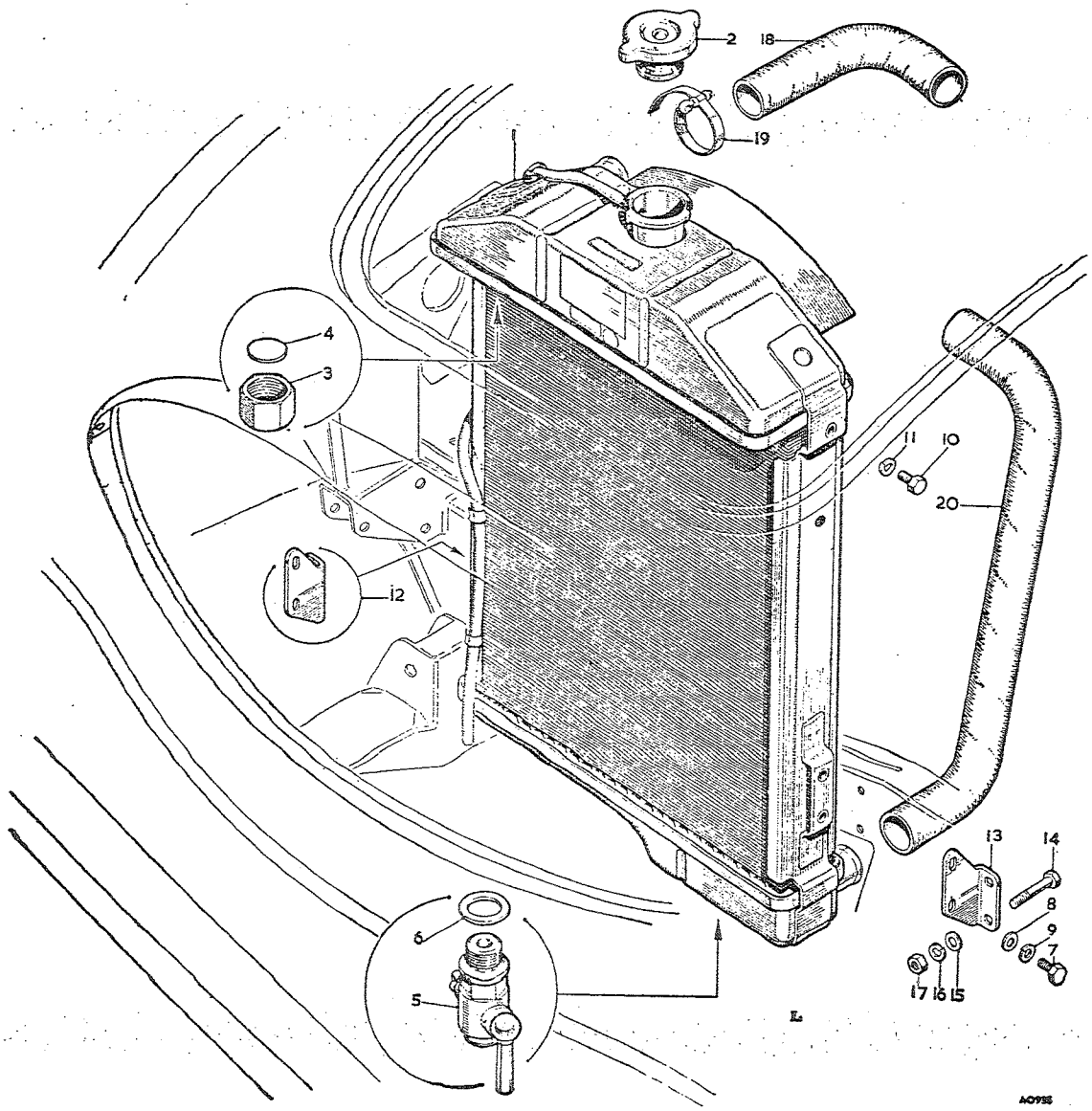

To face page C.1

Item No.	DESCRIPTION	Commencing (C) 101 Part Number	Illus. No.	Quantity	MODIFICATIONS New Part Number	MODIFICATIONS Change Point	REMARKS
	COOLING SYSTEM						
1	Radiator (with filler cap)	11B2301	1	1		Fin. (C) 6486 BN7, 6319 BT7 Com. (C) 6487 BN7, 6320 BT7	Not available; use AHB8946
2	Radiator (less filler cap)			1	AHB8946		
3	Cap—filler	ARH1039	2	1	ARH1542		ARH1039 not available; use ARH1542
4	Plug—header tank	AHB5401	3	1			
5	Washer—plug	AHB5402	4	1			
6	Tap—drain	2H10	5	1			
7	Washer—tap—$\frac{1}{16}$ (1·58 mm.) thick	2K4954	6	1			] Alternatives. Use as required to align drain tap
8	Washer—tap—$\frac{3}{32}$ (2·38 mm.) thick	2K4975	6	1			
9	Screw—radiator to support bracket	HZS0505	7	4			
10	Washer—plain—screw	PWZ105	8	4			
11	Washer—spring—screw	LWZ205	9	2			
12	Screw—radiator to top fixing bracket	HZS0505	10	2			
13	Washer—plain—screw	PWZ205		2			
14	Washer—spring—screw	LWZ205	11	2			
15	Bracket—radiator support—RH	11B2118	12	1			
16	Bracket—radiator support—LH	11B2119	13	1			
17	Bolt—bracket to front suspension support	HBZ0516	14	4			
18	Washer—plain—bolt	PWZ105	15	4			
19	Washer—spring—bolt	LWZ205	16	4			
20	Nut—bolt	FNZ105	17	4			
21	Hose—radiator—top	11B2115	18	1			
22	Clip—hose	8G632	19	2	HCS1217		8G632 not available; use HCS1217
23	Hose—radiator—bottom	11B2116	20	1	AHB8970	] Com. (C) 12049 BN7, 12063 BT7	
24	Clip—hose	8G632	19	2	X19546 HCS1217		8G632 and X19546 not available; use HCS1217

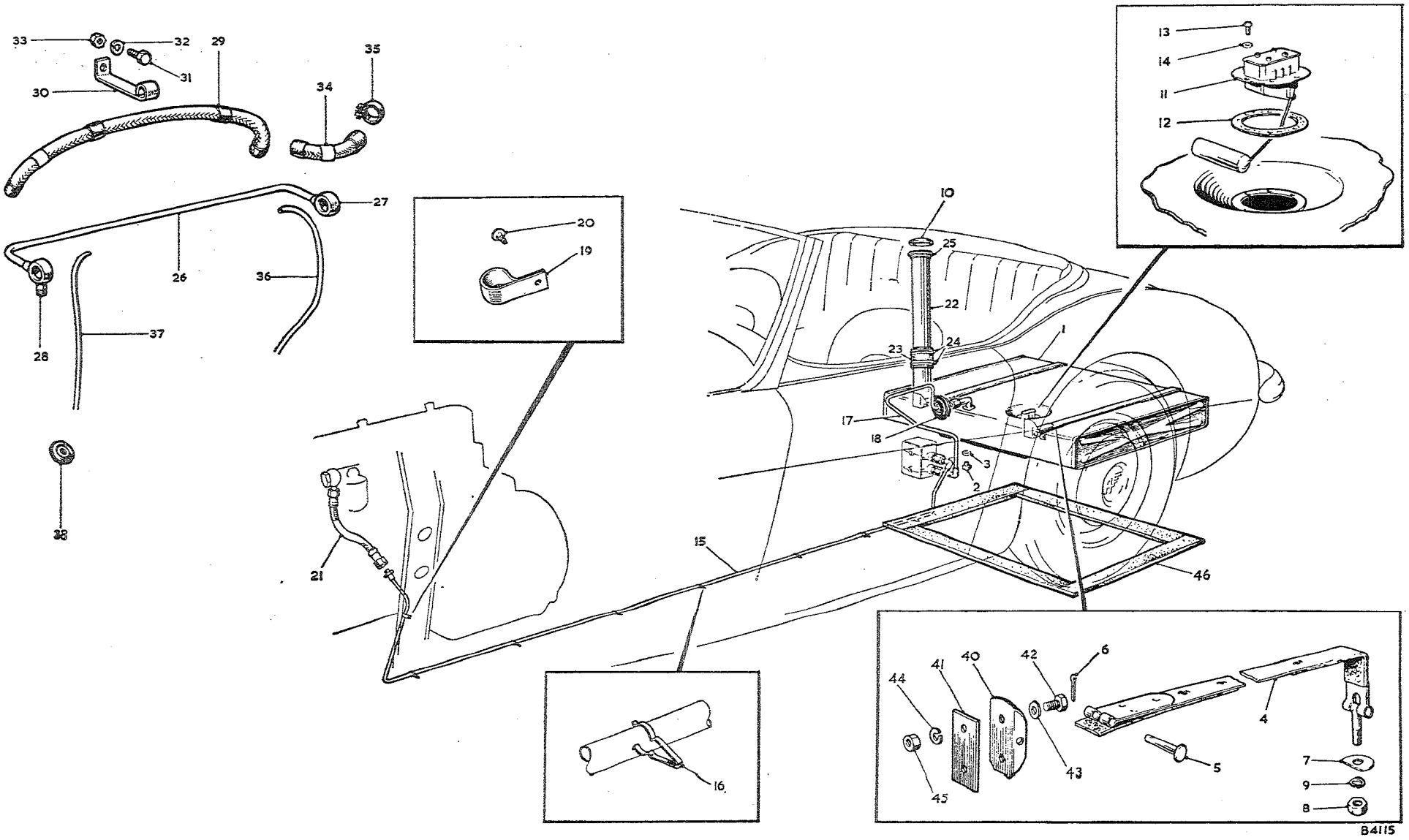

To face page D.1

Item No.	DESCRIPTION	Commencing (C) 101 Part Number	Illus. No.	Quantity	MODIFICATIONS New Part Number	Change Point	REMARKS
	FUEL SYSTEM						
	FUEL TANK						
1	**Tank—fuel**	**11B2375**	1	1			
2	Plug—drain	2A380	2	1			
3	Washer—plug	6K638	3	1			
4	Strap—tank to body	11B2137	4	2			
5	Pin—joint—strap	53K3061	5	2			
6	Pin—split—joint pin	ZPS0306	6	2			
7	Locknut—'T' bolt	FNZ205	8	4			
8	Washer—plain—'T' bolt	14B2036	7	2			
9	Washer—spring—'T' bolt	LWZ205	9	2			
10	Bracket—strap	14B1884	40	2			
11	Plate—stiffening—bracket	14B2531	41	2			
12	Screw—bracket and plate to body	HZS0405	42	4			
13	Washer—plain—screw	PWZ104	43	4			
14	Washer—spring—screw	LWZ204	44	4			
15	Nut—screw	FNZ104	45	4			
16	Rubber—sealing	14B6632	46	1			
17	Cap—filler	8G654	10	1			
18	Cap—filler (locking)	2A504		1			
19	Collar—filler tube	11G2100	25	1			Optional extra
20	Tube—filler	AHB8315	22	1			
21	Connection—tube to tank	11B2011	23	1			
22	Clip—connection USE SYC10.	8G505	24	2	HCS2228		8G505 part No. change; was 2H3711. No longer available; use HCS2228 25
23	Unit—fuel gauge	1B2736	11	1			
24	Washer—joint—unit	2H1082	12	1			
25	Screw—unit to tank	53K165	13	6			
26	Washer—screw (copper)	2A2088	14	6			
	FUEL PIPES						
27	Pipe—pump to flexible pipe BN7	11B2380	15	1	AHB9395	Com. (C) 17547	
28	Pipe—pump to flexible pipe BT7	AHB5399		1	AHB9386	Com. (C) 17352	
29	Clip—pipe to frame	2K8910	16	7		Fin. (C) 17546 BN7, 17351 BT7	
30	Clip—pipe to frame			7	PCR0507	Com. (C) 17547 BN7, 17352 BT7	
31	Screw—clip			6	PTZ1003		
32	**Pipe—tank to pump** BN7	**AHB5866**	17	1	**AHB9392**	**Com. (C) 17547**	
33	**Pipe—tank to pump** BT7	**AHB8334**		1	**AHB9383**	**Com. (C) 17352**	
34	Grommet	8D5768	18	1			
35	Clip—pipe to bonnet support	PCR0507	19	1		Fin. (C) 17546 BN7, 17351 BT7	
36	Screw—clip	PTZ1004	20	1			

Item No.	DESCRIPTION	Commencing (C) 101 Part Number	Illus. No.	Quantity	MODIFICATIONS New Part Number	MODIFICATIONS Change Point	REMARKS
	Fuel Pipes—*continued*						
1	Clip—pipe to LH wheelarch and heelboard			3	PCR0507		
2	Spacer—wheelarch clip			1	AHH5297		
3	Screw—wheelarch clip			1	PMZ0310	Com. (C) 17547 BN7, 17352 BT7	
4	Screw—heelboard clip			1	PMZ0308		
5	Washer—spring—screw			2	LWZ203		
6	Nut—screw			2	FNZ103		
7	Pipe—flexible	AHB5366	21	1	AHB9059	Com. (C) 13751 12B564 (C) 17551 (PAU228 ?)	
8	Clip—pipe to front carburetter			1	ACH5854		
9	**Pipe—front to rear carburetter**	**AEC1230**	26	1			
10	Union—banjo—single	3H743	27	1		Fin. (E) 29D-H26212	
11	Union—banjo—double	AEC844	28	1			
12	Pipe—front to centre carburetter		29	1	AEC2072	Com. (E) 29E-H101	
13	Clip—pipe support		30	1	AEC2135		
14	Screw—clip		31	1	HZS0405	Com. (E) 29E-H929 also 889, 890, 892	
15	Washer—spring—screw		32	1	LWZ204		
16	Nut—screw		33	1	FNZ104		
17	Pipe—centre to rear carburetter		34	1	AEC2071	Com. (E) 29E-H101	
18	Clip—pipe		35	4	ACH5854		
	OVERFLOW PIPES						
19	Pipe—overflow—front carburetter						See page D.9
20	Pipe—overflow—rear carburetter	2K5215		1			
21	Clip—rear overflow pipe to heat shield	PMZ0307		1		Fin. (E) 29D-H2863	
22	Screw—clip	LWZ303		1			
23	Washer—spring—screw	FNZ103		1			
24	Nut—screw					Com. (E) 29D-H2864	See page D.11
25	Pipe—overflow—front and rear carburetter		36	1	AEC981	Fin. (E) 29D-H26212	
26	Pipe—overflow—front carburetter (Nylon)		37	1	AEC982		
27	Pipe—overflow—rear carburetter (Nylon)					Fin. (E) 29D-H26212	
28	Grommet—overflow pipe	RFR106	38	1			
29	Pipe—overflow—front carburetter			1	AEC2134	Com. (E) 29E-H1092	
30	Pipe—overflow—centre and rear carburetter			2	AEC2133		

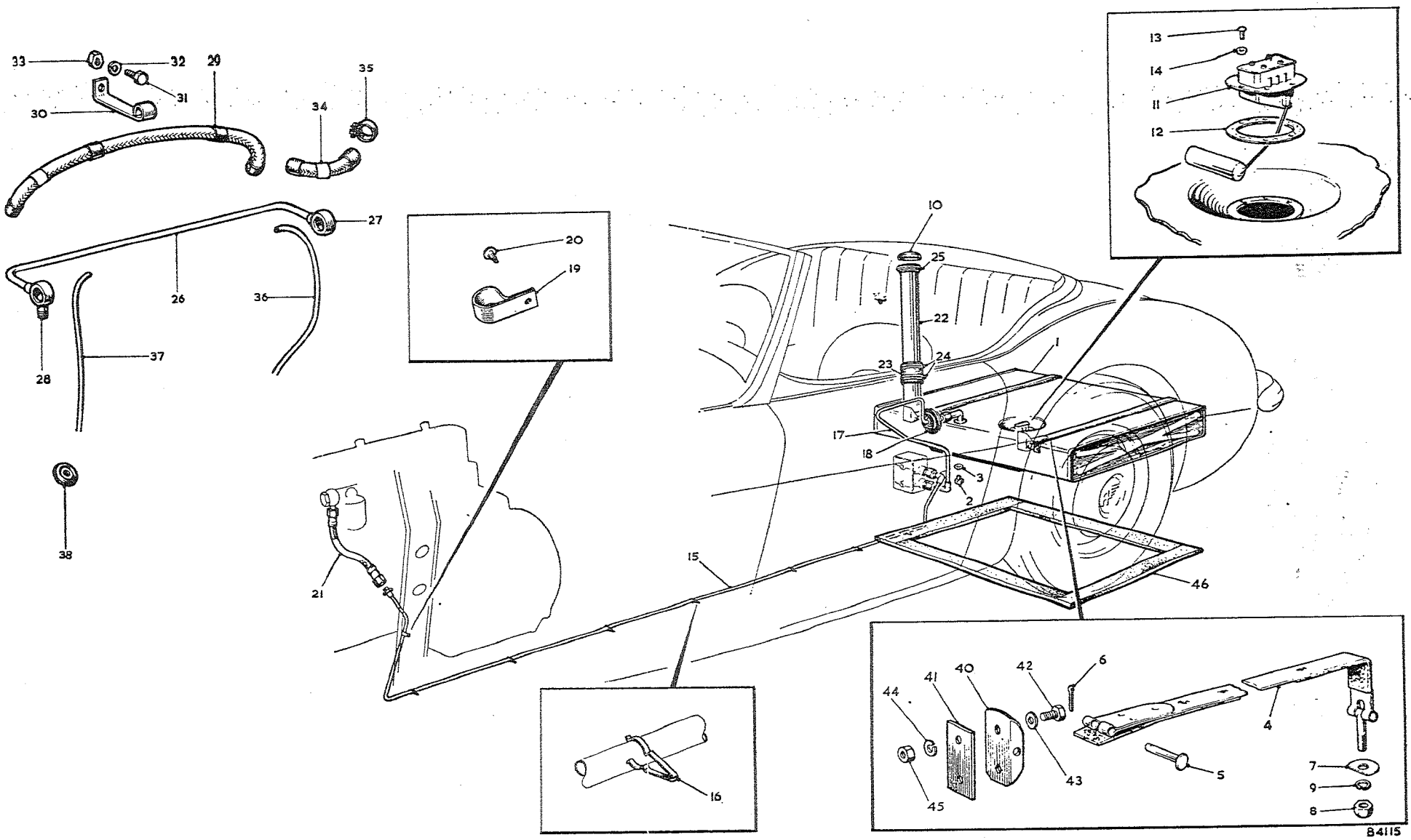

To face page D.2

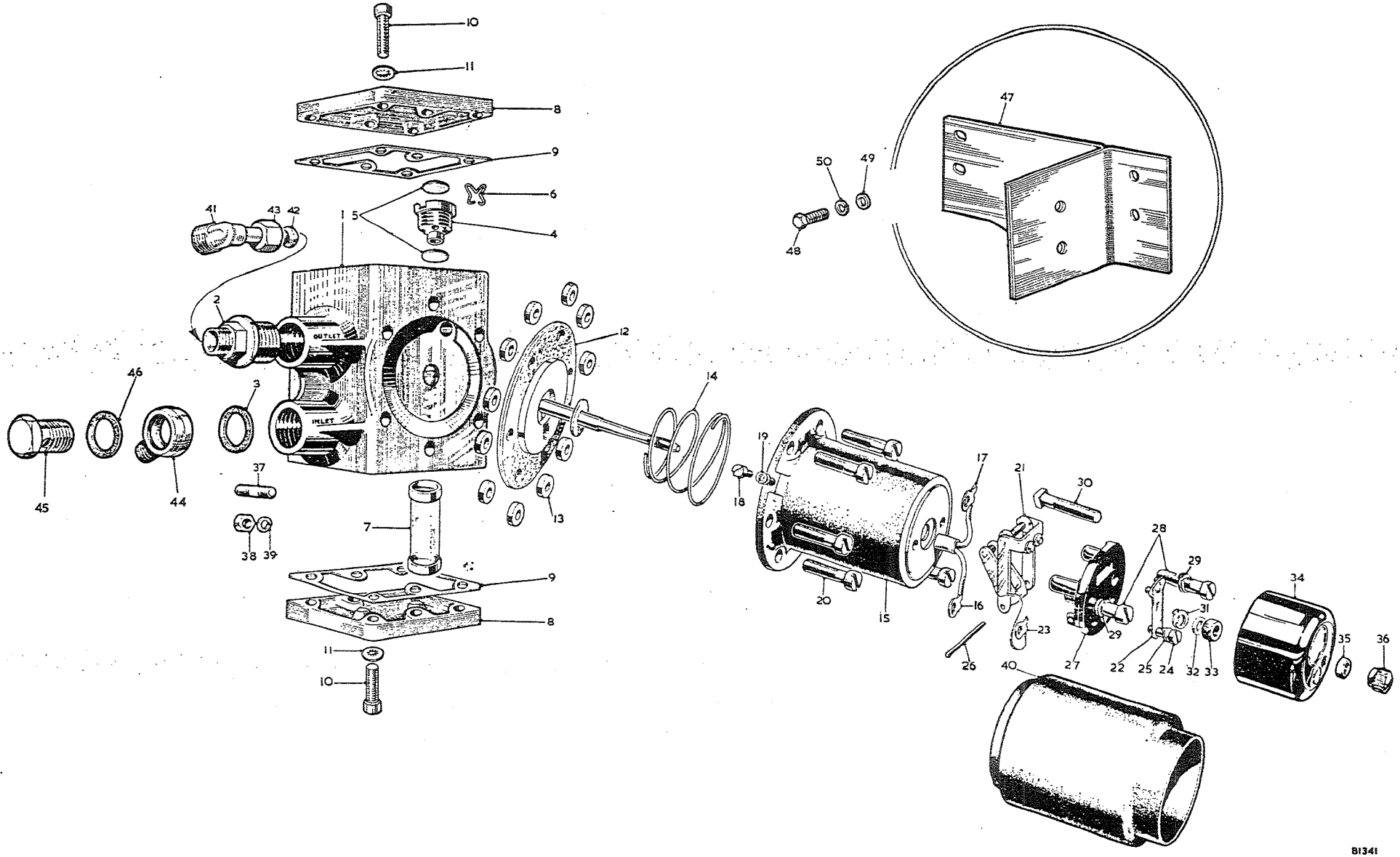

To face page D.3

Item No.	DESCRIPTION	Commencing (C) 101 Part Number	Commencing (C) 101 Illus. No.	Quantity	MODIFICATIONS New Part Number	MODIFICATIONS Change Point	REMARKS
	FUEL PUMP						
1	**Pump—fuel**	**AUA72**		1	**AUA172**	**Com. (C) 13831** **Fin. (C) 17351 BT7**	**AUA72 not available; use AUA172**
2	**Pump—fuel** **BT7**			1	**AUA173**	**Com. (C) 17352**	
3	Body	AUA6058	1	1			Part No. change; was AUA4644
4	Union—inlet and outlet	AUC2140	2	2		Fin. (C) 17351 BT7	
5	Union—banjo—inlet and outlet **BT7**		44	2	AUC1833	Com. (C) 17352	
6	Washer—union (fibre)	AUC2141	3	2			
7	Bolt—banjo union **BT7**		45	2	AUC2698	Com. (C) 17352	
8	Washer—bolt (fibre) **BT7**		46	2	AUC2141		
9	Cage—valve	AUA4607	4	1		Fin. (C) not available	Not available; use AUE38
10	Clip—valve cage	AUA4609	6	1			
11	**Cage assembly—valve**			1	**AUE38**		
12	Cage			1	AUB624		
13	Washer			1	AUB625	Com. (C) not available	
14	Valve			1	AUB6003		
15	Circlip			1	AUB579		
16	Disc—valve	AUA4611	5	2/1			Quantity reduced at (C) not available
17	Spring—disc			1	AUB581	Com. (C) not available	
18	Filter	AUA4647	7	1			
19	Lid—body	AUA4645	8	2			
20	Washer—joint—lid	AUA4646	9	2			
21	Screw—lid to body	AUA4083	10	12			
22	Washer—shakeproof—screw	LWN403	11	12			
23	Diaphragm	AUA6012	12	1	AYL3492 (P/A16)	Fin. (C) 13830	Part No. change; was AUA4643
24	Diaphragm			1	AUB6004		Alternatives. Use impact washer AUB582 with ~~AUB6015~~ AUB6071 AUB809
25	Diaphragm ..... use AUB6071 & AUB706 105			1	AUB6015	use AUB6071	
26	Washer—joint—diaphragm ..... use use AUB6097		AUB 809	1	~~AUB593~~ 809	Com. (C) 13831	
27	Washer—impact—diaphragm			1	AUA1447		For use with AUB6015 For AUA1447 use AUB582 for this application
28	Washer—impact—diaphragm			1	AUB582		
29	Roller	AUA1433	13	11			
30	Spring	AUA1785	14	1		Fin. (C) 13830	For use with AUA6003 For use with AUA6017 Not available; use AUB521 For use with AUB6007 and AUB6045
31	Spring	AUA875		1			
32	Spring			1	AUB521	Com. (C) 13831	

Item No.	DESCRIPTION	Commencing (C) 101 Part Number	Illus. No.	Quantity	MODIFICATIONS New Part Number	MODIFICATIONS Change Point	REMARKS
	Fuel Pump—*continued*						
1	**Housing—coil**	**AUA6003**	15	1		**Fin. (C) 13830**	**Not available; use AUA6017 with AUA875 or AUB521**
2	**Housing—coil**	**AUA6017**		1		**Fin. (C) 13830**	**Not available; use AUB6045 or AUB6007 with AUB6004 or AUB6007 with AUB6015 and AUB582**
3	**Housing—coil**			1	**AUB6045**	**Com. (C) 13831**	**Alternatives**
4	**Housing—coil**			1	**AUB6007**	**Com. (C) 13831**	**Alternatives**
5	Tag—5 BA terminal	AUA1455	16	1			
6	Tag—2 BA terminal	AUA1456	17	1			
7	Screw—earth	AUA4850	18	1	AUA699	Com. (C) 13831	
8	Washer—spring—screw	AUA1863	19	1	AUA585	Com. (C) 13831	
9	Screw—housing to body	AUA1453	20	6			
10	**Rocker and blade**	**AUA6021**	21	1	Use AUB6236		**Alternatives**
11	**Rocker and blade**	**AUB6022**		1	Use AUB6236		**Alternatives**
12	Blade	AUA6036	22	1			
13	Tag—2 BA terminal	AUA1456	23	1			
14	Screw—blade	AUA847	24	1			
15	Washer—spring—screw	AUA868	25	1			
16	Spindle—contact breaker	AUA1435	26	1			
17	Pedestal	AUA6034	27	1			Alternatives. AUA6034 not available; use AUB6034
18	Pedestal	AUB6034		1			
19	Screw—pedestal to housing	AUA1459	28	2			
20	Washer—spring—screw	AUA1863	29	2			
21	Screw—terminal	AUA1468	30	1			
22	Washer—spring—screw	AUA1863	31	1			
23	Washer—lead—screw	AUA1662	32	1			
24	Nut—screw	AUA1661	33	1			
25	Cover—end	AUA1466	34	1			
26	Nut—cover	AUA878	35	1			
27	Knob—terminal	AUA869	36	1			
28	Sleeve (rubber)	AUA504		1			
29	Stud—pump to body	AUA1500	37	2			
30	Washer—spring—stud	LWZ305	39	2			
31	Nut—stud	FNZ105	38	2			

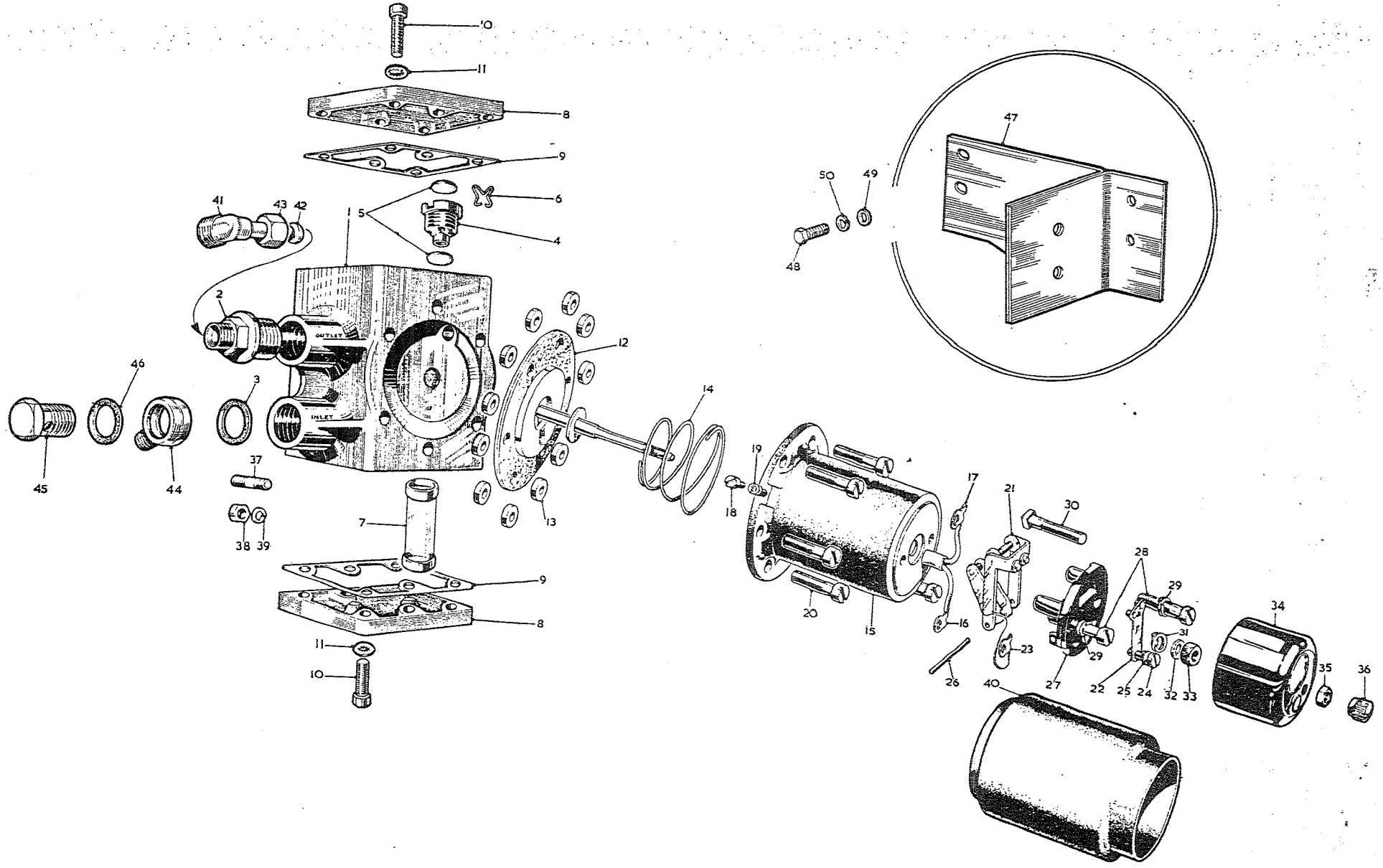

To face page D.4

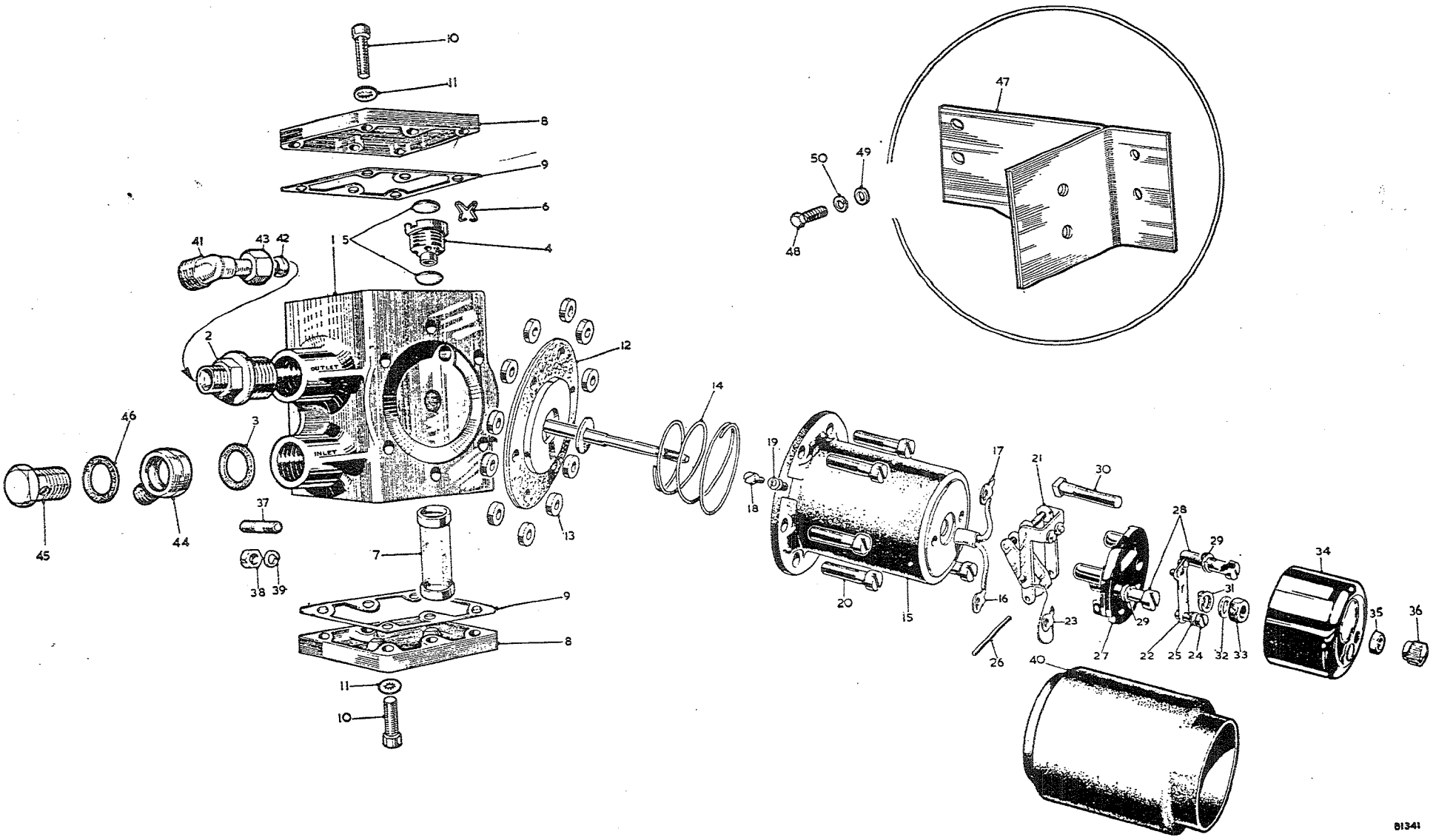

To face page D.5

Item No.	DESCRIPTION		Commencing (C) 101 Part Number	Illus. No.	Quantity	MODIFICATIONS New Part Number	MODIFICATIONS Change Point	REMARKS
	Fuel Pump—*continued*							
1	Cover—pump		ACG5147	40	1		Fin. (C) 10842 BN7, 10876 BT7	
2	Elbow—pump to pipe		AUA1478	41	1			Part No. change; was 127464 and AAA1382
3	Olive	BN7	AUA1486	42	1			Part No. change; was 2718 and AAA18
4	Nut		AAA17	43	1			Part No. change; was 2715
5	Bracket—pump mounting		AHB5378	47	1	AHB9378	Com. (C) 17352	
6	Screw—bracket to body	BT7	HZS0404	48	4			
7	Washer—plain—screw		PWZ104	49	4			
8	Washer—spring—screw		LWZ204	50	4			

Item No.	DESCRIPTION	Commencing (E) 29D-H101 Part Number	Illus. No.	Quantity	MODIFICATIONS New Part Number	MODIFICATIONS Change Point	REMARKS
	CARBURETTERS						
1	**Carburetter installation**	**AUC914**		1		**Fin. (E) 29D-H2863**	**Not available; use AUC963**
						Recommenced (E) 29D-H6395; also 6369, 6374-6380, 6382, 6389, 6390, 6392	
						Fin. (E) 29D-H18655	
2	**Carburetter installation**			1	**AUC963**	**Com. (E) 29D-H18656**	
						Fin. (E) 29D-H26212	
3	**Carburetter assembly—front**	**AUC9060**		1		**Fin. (E) 29D-H2863**	**Not available; use AUC9074**
4	**Carburetter assembly—rear**	**AUC9061**		1	AUC9075	**Recommenced (E) 29D-H6395; also 6369, 6374-6380, 6382, 6389, 6390, 6392**	
						Fin. (E) 29D-H18655	
5	**Carburetter assembly—front**			1	**AUC9074**	**Com. (E) 29D-H18656**	
6	**Carburetter assembly—rear**			1	**AUC9075**	**Fin. (E) 29D-H26212**	
7	**Body—front carburetter**	**AUC8243**	1	1			
8	**Body—rear carburetter**	**AUC8242**		1			
9	Gland (cork)	AUC2098		4			
10	Washer	AUC2096		4			
11	Spring	AUC2097		4			
12	Retainer—spring	AUC2010		4		Fin. (E) 29D-H2863	
13	Pin—piston lifting	AUC2065	2	2		Recommenced (E) 29D-H6395;	
14	Spring—pin	AUC2066	3	2		also 6369, 6374-6380, 6382, 6389,	
15	Washer (Neoprene)	AUC4943	4	2		6390, 6392	
16	Washer (brass)	AUC4944	5	2		Fin. (E) 29D-H18655	
17	Circlip—pin	AUC4386	6	2			
18	Union—auto ignition—rear carburetter	AUC4490	7	1			
19	Adaptor—union	AUC2044	8	1			
20	Gasket—adaptor	AUC2014	9	1			
21	Screw—adaptor	AUC2175	10	2			
22	Washer—shakeproof—screw	LWN403	11	2			Part No. change; was AUA4643
23	**Chamber and piston assembly**	**AUC8075**	12	2			**Alternatives**
24	**Chamber and piston assembly**	**AUD9189**	12	2		**Fin. (E) 29D-H2863**	
25	Screw—needle locking	AUC2057	23	2			
26	Cap and damper assembly	AUC8102	13	2			
27	**Chamber and piston assembly**		12	2	**AUC8071**	**Com. (E) 29D-H6395 also 6369, 6374-6380, 6382, 6389, 6390, 6392**	**Alternatives. AUC8071 not available; use AUD9187**
28	**Chamber and piston assembly**		12	2	**AUD9187**		
29	Screw—needle locking		23	2	AUC2057		
30	Cap and damper assembly		13	2	AUC8103	**Fin. (E) 29D-H26212**	

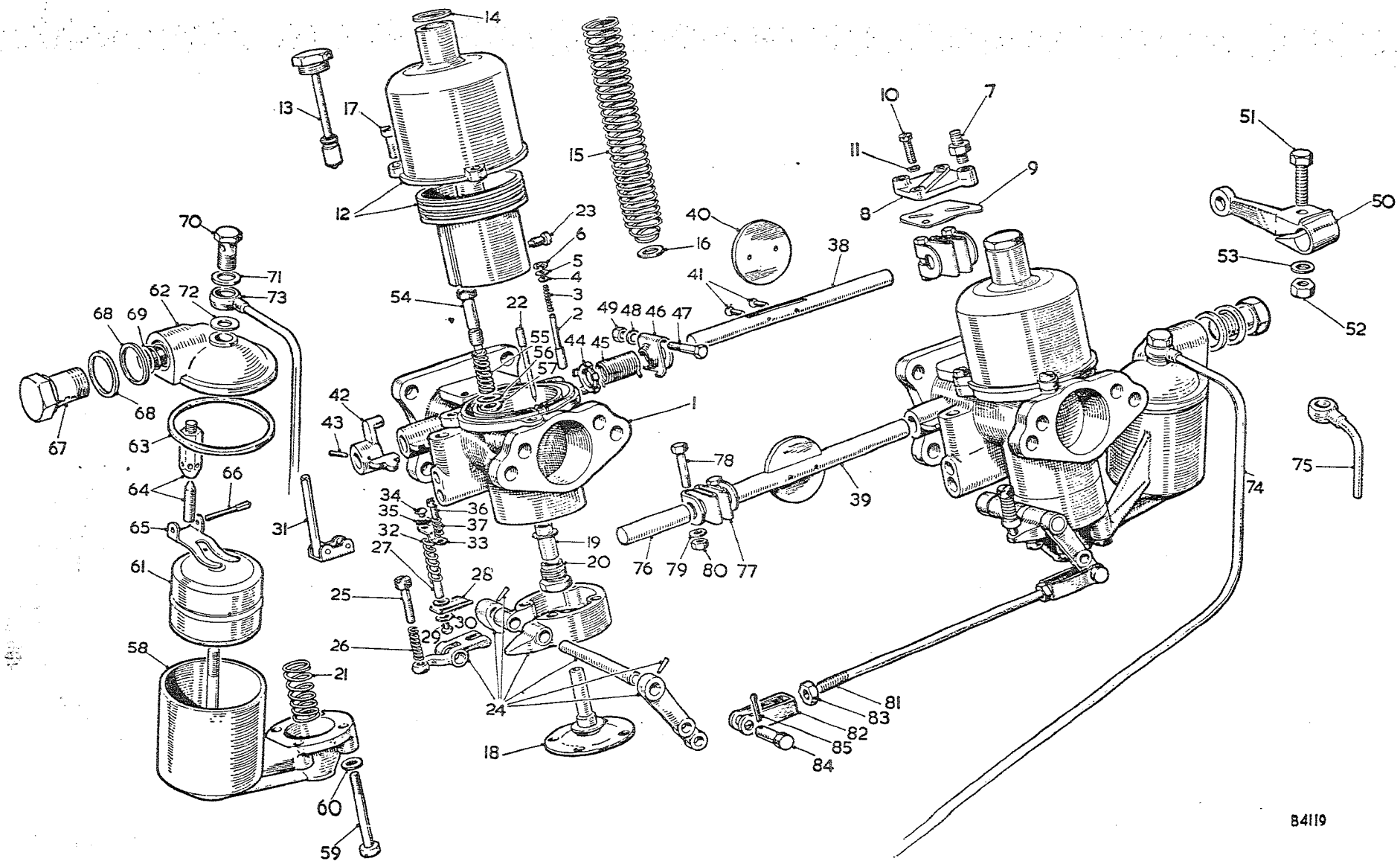

To face page D.6

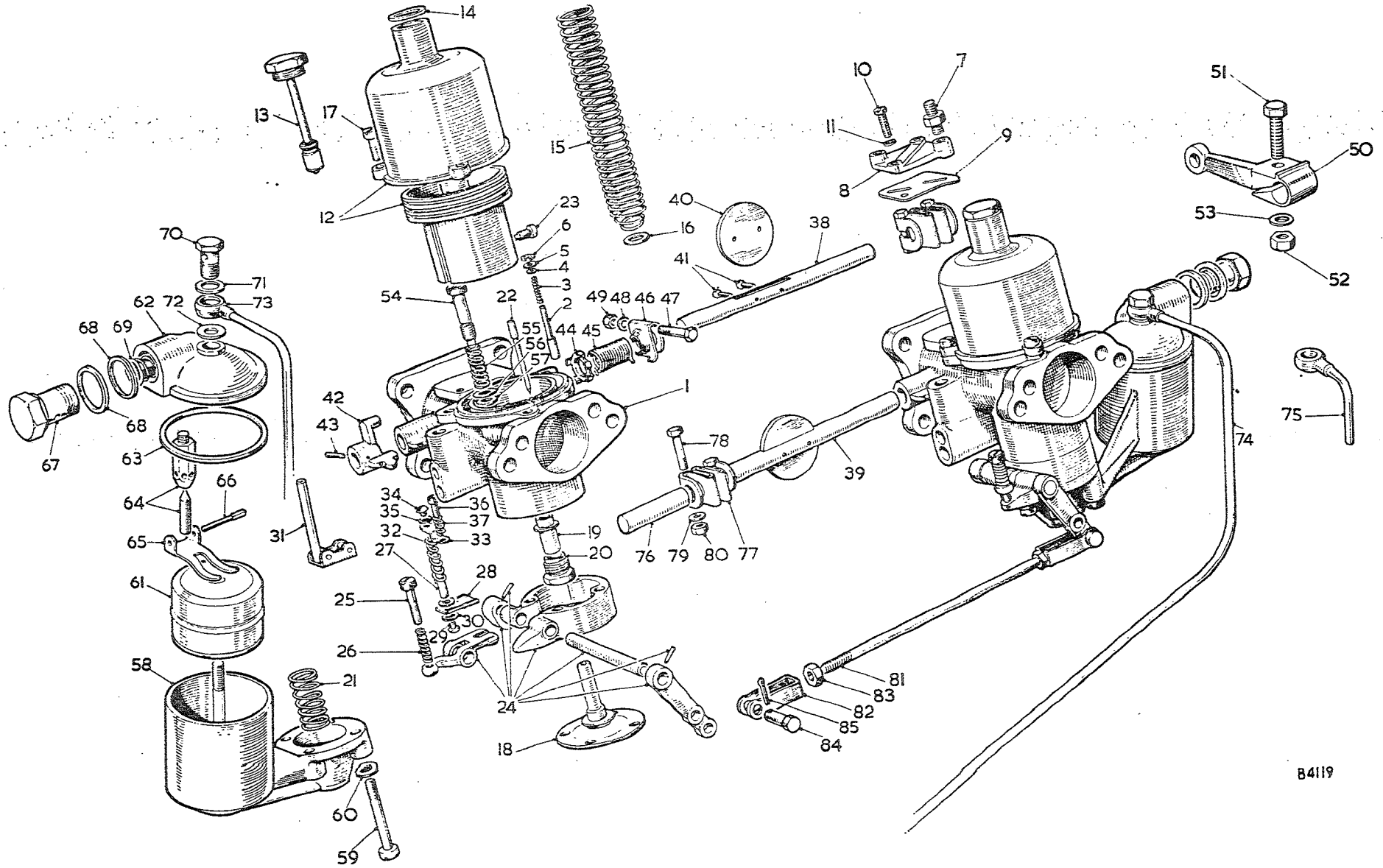

To face page D.7

Item No.	DESCRIPTION	Commencing (E) 29D-H101 Part Number	Illus. No.	Quantity	MODIFICATIONS New Part Number	MODIFICATIONS Change Point	REMARKS
	Carburetters—*continued*						
1	Washer—cap (fibre)	AUC4900	14	2			
2	Spring—piston—green	AUC1170	15	2			
3	Washer—spring	AUC3071	16	2			
4	Screw—chamber to body	AUC2175	17	6		Fin. (E) 29D-H2863	
5	Jet assembly	AUC8155	18	2		Recommenced (E) 29D-H6395; also 6369, 6374-6380, 6382, 6389, 6390, 6392	
6	Bearing—jet	AUC2001	19	2		Fin. (E) 29D-H26212	
7	Screw—jet locking	AUC2002	20	2			
8	Spring—jet return	AUC2006	21	2			
9	Needle—jet—rich (RD)	AUD1288	22	2			
10	Needle—jet—standard (CV)	AUD1112	22	2			
11	Needle—jet—weak (SQ)	AUD1332	22	2			
12	**Housing assembly—jet—front carburetter**	**AUC8149**	24	1		**Fin. (E) 29D-H2863**	
13	**Housing assembly—jet—rear carburetter**	**AUC8206**		1		**Recommenced (E) 29D-H6395; also 6369, 6374-6380, 6382, 6389, 6390, 6392**	
14	**Housing assembly—jet—front carburetter**			1	**AUC8673**	**Fin. (E) 29D-H18655**	
15	**Housing assembly—jet—rear carburetter**			1	**AUC8099**	**Com. (E) 29D-H18656**	
16	Screw—jet adjusting	AUC2521	25	1		**Fin. (E) 29D-H26212**	
17	Spring—screw	AUC2451	26	2		Fin. (E) 29D-H2863	
						Recommenced (E) 29D-H6395; also 6369, 6374-6380, 6382, 6389, 6390, 6392	
						Fin. (E) 29D-H26212	
18	Rod—sliding	AUC2018	27	2		Fin. (E) 29D-H2863	
19	Shoe—cam	AUC2031	28	2		Recommenced (E) 29D-H6395; also 6369, 6374-6380, 6382, 6389, 6390, 6392	
20	Screw—shoe	AUC4790	29	2			
21	Washer—shakeproof—screw	LWN403	30	4			Part No. change; was AUA4643
22	Shoe and rod assembly—cam		31	2	AUC8964	Fin. (E) 29D-H18655 Com. (E) 29D-H18656	
23	Spring—rod	AUC2020	32	2		Fin. (E) 29D-H26212	
24	Plate—top	AUC2019	33	2		Fin. (E) 29D-H2863	
25	Screw—plate retaining	AUC4790	34	2		Recommenced (E) 29D-H6395; also 6369, 6374-6380, 6382, 6389, 6390, 6392	
26	Washer—shakeproof—screw	LWN403	35	4			Part No. change; was AUA4643
27	Screw—stop adjusting	AUC3464	36	2			
28	Spring—screw	AUC2451	37	2		Fin. (E) 29D-H26212	

Item No.	DESCRIPTION	Commencing (E) 29D-H101 Part Number	Illus. No.	Quantity	MODIFICATIONS New Part Number	MODIFICATIONS Change Point	REMARKS
	Carburetters—*continued*						
1	Spindle—throttle—front carburetter	AUC4859	38	1			
2	Spindle—throttle—rear carburetter	AUC4839	39	1			
3	Disc—throttle	AUC3280	40	2			
4	Screw—disc	AUC1358	41	4		Fin. (E) 29D-H2863	
5	Stop—throttle	AUC2023	42	2		Recommenced (E) 29D-H6395; also 6369, 6374-6380, 6382, 6389, 6390, 6392	
6	Pin—stop	AUC2106	43	2		Fin. (E) 29D-H26212	
7	Plate—anchor—return spring	AUC1037	44	2			
8	Spring—return	AUC4751	45	2			
9	Clip—return spring	AUC4771	46	2			
10	Bolt—clip	AUC2672	47	2			
11	Washer—bolt	AUC4612	48	2			Part No. change; was AUC2673
12	Nut—bolt	AJD8014Z	49	2			
13	Lever—throttle	AUC1196	50	1		Fin. (E) 29D-H2863	
14	Lever—throttle		50	1	AUC1313	Com. (E) 29D-H6395 also 6369, 6374-6380, 6382, 6389, 6390, 6392	
						Fin. (E) 29D-H26212	
15	Bolt—lever	AJD1042	51	1		Fin. (E) 29D-H2863	Part No. change; was AUC2694
16	Nut—bolt	AJD8012Z	52	1		Recommenced (E) 29D-H6395; also 6369, 6374-6380, 6382, 6389, 6390, 6392	
						Fin. (E) 29D-H26212	
17	Washer—spring—bolt	LWZ303		1		Fin. (E) 29D-H2863	Part No. change; was AUC2246
18	Washer—plain—bolt		53	1	AUC8396	Com. (E) 29-H6395 also 6369, 6374-6380, 6382, 6389, 6390, 6392	
						Fin. (E) 29D-H26212	
19	Valve—slow running	AUC2028	54	2			
20	Spring—valve	AUC2027	55	2			
21	Washer—dished (brass)	AUC2030	56	2			
22	Washer—gland (Neoprene)	AUC2029	57	2		Fin. (E) 29D-H2863	
23	Chamber—float—front carburetter	AUC4067	58	1		Recommenced (E) 29D-H6395; also 6369, 6374-6380, 6382, 6389, 6390, 6392	
24	Chamber—float—rear carburetter	AUC2062		1		Fin. (E) 29D-H26212	
25	Bolt—float chamber to body	AUC2110	59	8			Part No. change; was AUA4643
26	Washer—shakeproof—bolt	LWN403	60	8			
27	Float	AUC1123	61	2			
28	Lid—float chamber—front carburetter	AUC4260	62	1			
29	Lid—float chamber—rear carburetter	AUC4261		1			
30	Washer—lid	AUC1147	63	2			

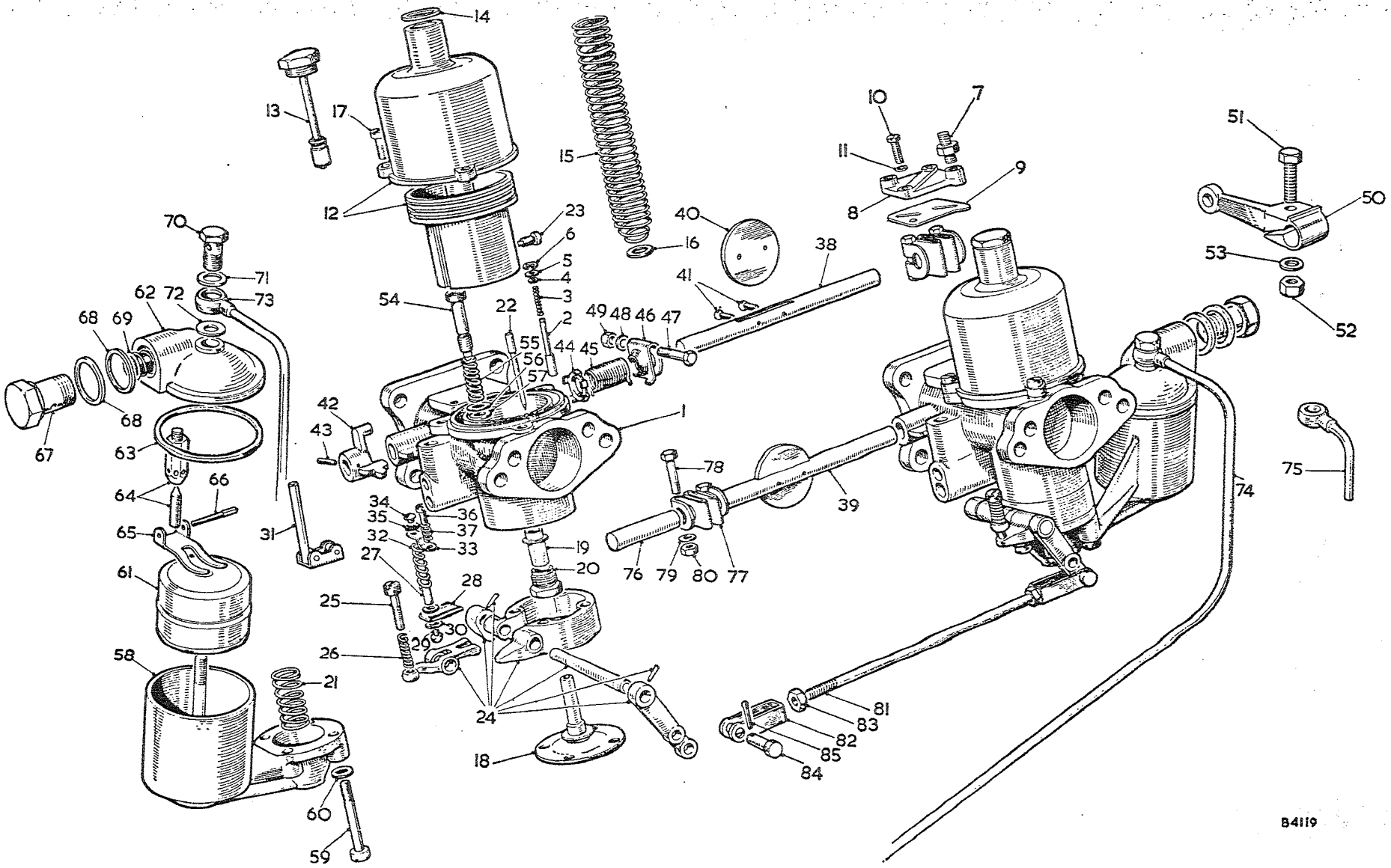

To face page D.8

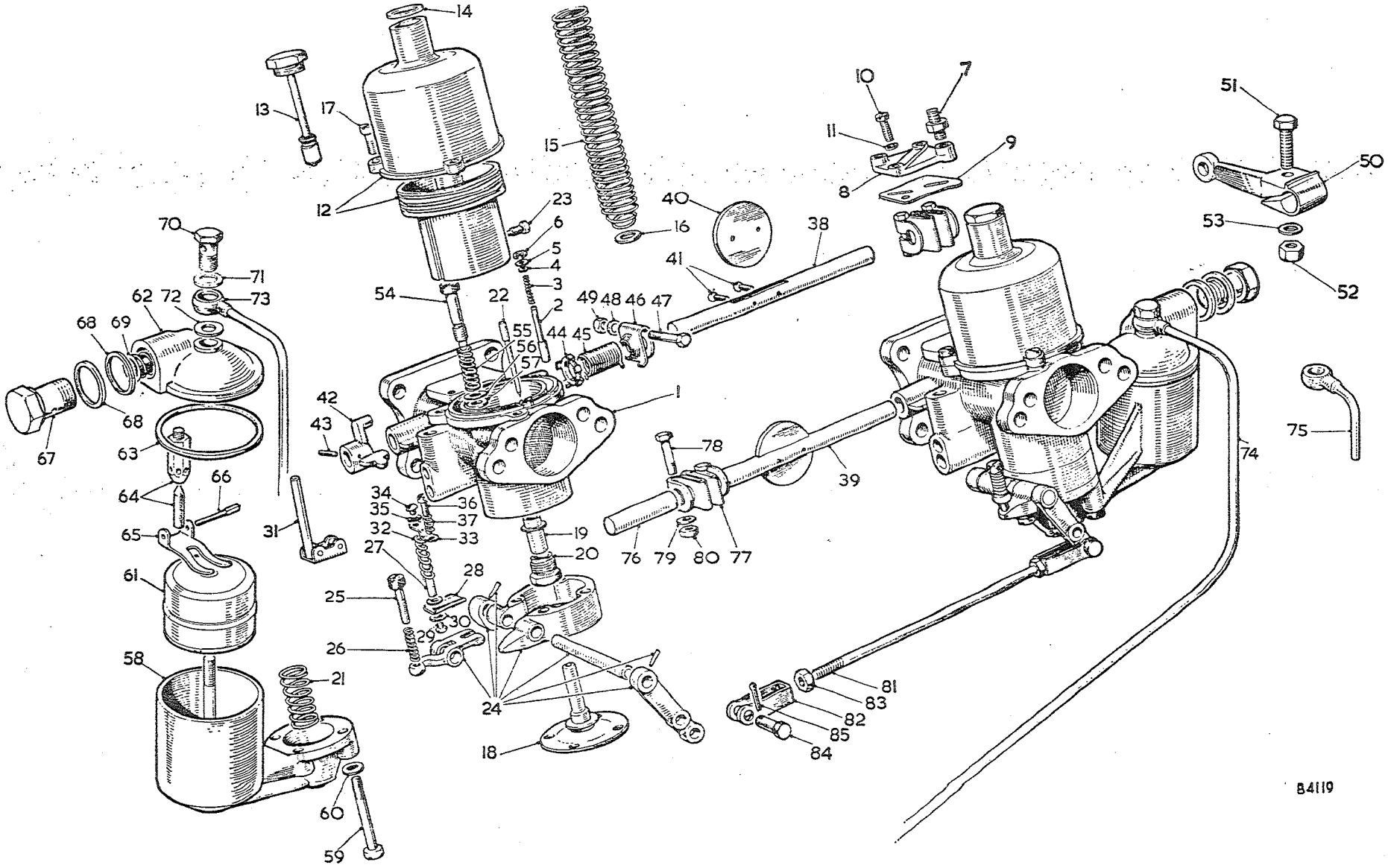

To face page D.9

Item No.	DESCRIPTION	Commencing (E) 29D-H101 Part Number	Illus. No.	Quantity	MODIFICATIONS New Part Number	MODIFICATIONS Change Point	REMARKS
	Carburetters—*continued*						
1	Needle and seat assembly	AUC8170	64	2			
2	Lever—hinged	AUC1980	65	2			
3	Pin—lever	AUC1152	66	2		Fin. (E) 29D-H2863 Recommenced (E) 29D-H6395; also 6369, 6374-6380, 6382, 6389, 6390, 6392 Fin. (E) 29D-H26212	
4	Bolt—banjo	AUC2698	67	2			
5	Washer—bolt (fibre)	AUC2141	68	4			
6	Filter	AUC2139	69	2			
7	Nut—cap—lid	AUC1867	70	2			
8	Washer—nut (aluminium)	AUC1557	71	2			
9	Washer—nut (fibre)	AUC1928	72	2			
10	Banjo vent and drain pipe—front carburetter	AUC8366	73	1		Fin. (E) 29D-H2863	
11	Banjo vent and drain pipe—rear carburetter	AUC8367	74	1			
12	Banjo vent and drain pipe		75	2	AUC3200	Com. (E) 29D-H6395 also 6369, 6374-6380, 6382, 6389, 6390, 6392 Fin. (E) 29D-H26212	
13	Rod—connecting—throttle	AUC2419	76	1			
14	Coupling—rod	AUC4334	77	2			
15	Bolt—coupling	AUC2672	78	4			
16	Washer—bolt	AUC4612	79	4		Fin. (E) 29D-H2863 Recommenced (E) 29D-H6395; also 6369, 6374-6380, 6382, 6389, 6390, 6392 Fin. (E) 29D-H26212	
17	Nut—bolt	AJD8014Z	80	4			
18	Rod—connecting—jets	AUC2867	81	1			Part No. change; was AUC2673
19	Fork—rod	AUC2256	82	2			
20	Nut—rod	AJD8012Z	83	2			
21	Pin—pivot—fork to lever	AUC2108	84	2			
22	Pin—split—pivot pin	CPS0204	85	2			Part No. change; was AUC2109

SERVICE PARTS LIST

Item No.	DESCRIPTION	Commencing (E) 29D-H2864 Part Number	Illus. No.	Quantity	MODIFICATIONS New Part Number	MODIFICATIONS Change Point	REMARKS
	Carburetters—*continued*	**AUC935**		1			
	Carburetter installation	**AUC9068**		1			
2	**Carburetter assembly—front**	**AUC9069**		1			
3	**Carburetter assembly—rear**	**AUC8244**	1	1			
4	**Body—front carburetter**	**AUC8245**		1			
5	**Body—rear carburetter**	AUC2098		4			
6	Gland (cork)	AUC2096		4			
7	Washer	AUC2097		4			
8	Spring	AUC2010		4			
9	Retainer—spring	AUC2065	2	2			
10	Pin—piston lifting	AUC2066	3	2			
11	Spring—pin	AUC4943	4	2			
12	Washer (Neoprene)	AUC4944	5	2			
13	Washer (brass)	AUC1250	6	2			
14	Circlip—pin	AUC4490	7	1			
15	Union—auto ignition—rear carburetter	AUC2044	8	1			
16	Adaptor—union	AUC2014	9	1			
17	Gasket—adaptor	AUC2175	10	2			
18	Screw—adaptor	LWN403	11	2			
19	Washer—shakeproof—screw	**AUC8071**	12	2		Fin. (E) 29D-H6394 except 6369, 6374-6380, 6382, 6389, 5390, 6392	Part No. change; was AUA4643 **Alternatives. AUC8071 not available; use AUD9187**
20	**Chamber and piston assembly**	**AUD9187**	12	2			
21	**Chamber and piston assembly**	AUC2057	13	2			
22	Screw—needle locking	AUC8103	14	2			
23	Cap and damper assembly	AUC4900	15	2			
34	Washer—cap (fibre)	AUC1170	16	2			
25	Spring—piston—green	AUC3071	17	2			
26	Washer—spring	AUC2175	18	6			
27	Screw—chamber to body	AUC8155	19	2			
28	Jet assembly	AUC2001	20	2			
29	Bearing—jet	AUC2002	21	2			
30	Screw—jet locking	AUC2006	22	2			
31	Spring—jet return	AUD1238	23	2			
32	Needle—jet—rich (RD)	AUD1112	23	2			
33	Needle—jet—standard (CV)	AUD1332	23	2			
34	Needle—jet—weak (SQ)	**AUC8221**	24	2			
35	**Housing assembly—jet**	AUC2521	25	2			
36	Screw—jet adjusting	AUC2451	26	2			
37	Spring—screw	AUC2067	27	1			
38	Chamber—float—front carburetter	AUC2064		1			Part No. change; was AUA4643
39	Chamber—float—rear carburetter	AUC2110	28	8			
40	Bolt—float chamber to body	LWN403	29	8			
41	Washer—shakeproof—bolt						

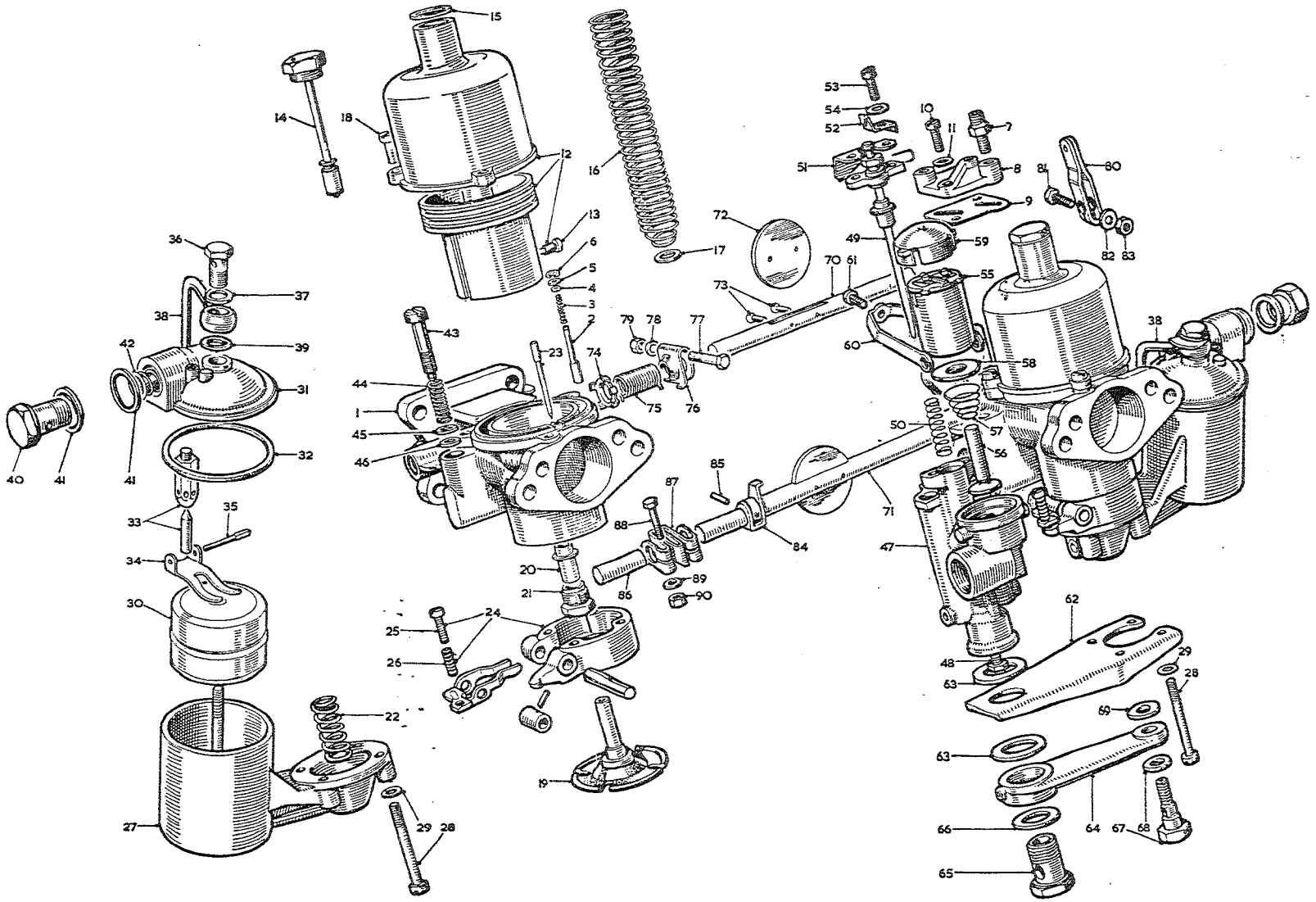

To face page D.10

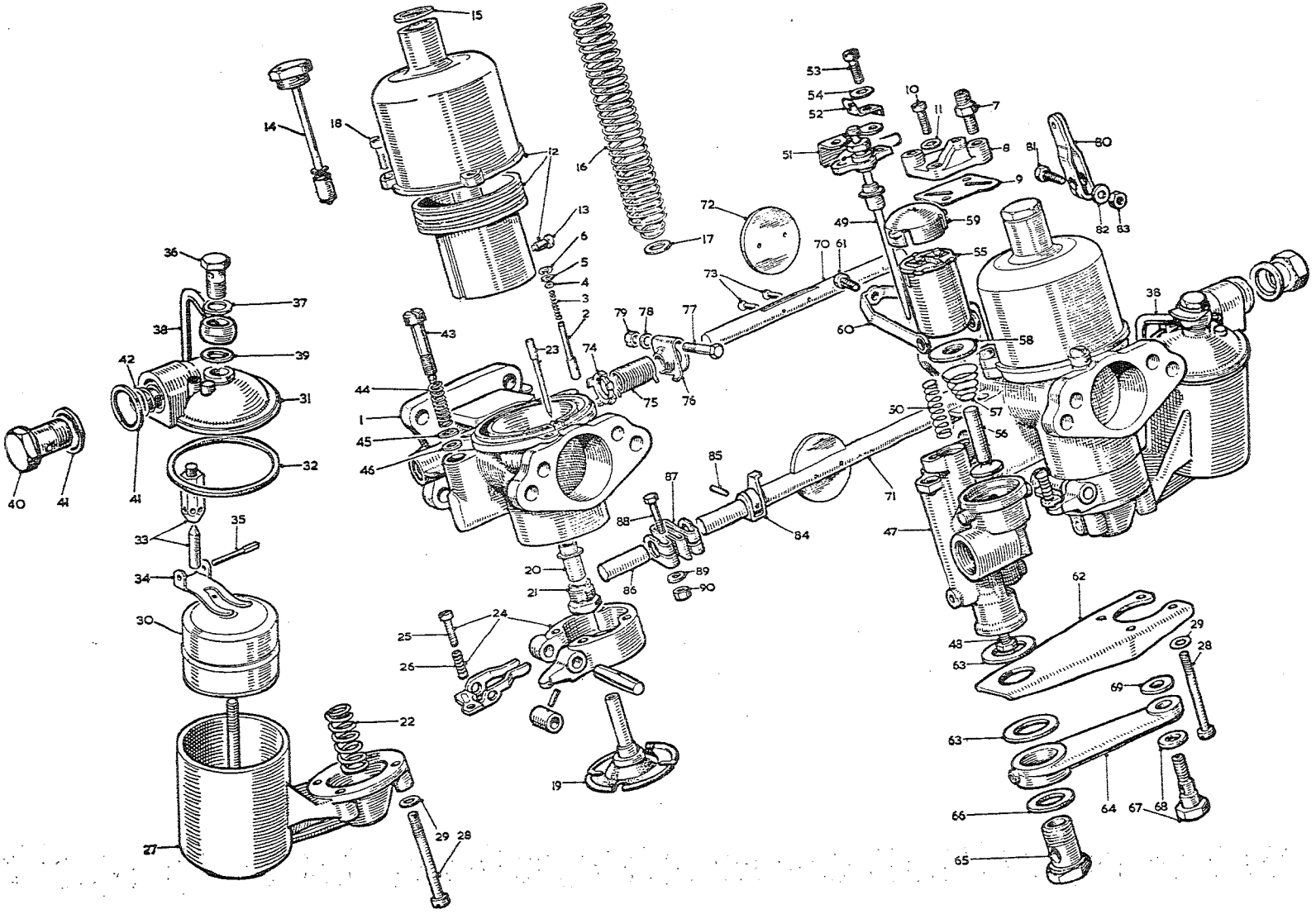

To face page D.11

Item No.	DESCRIPTION	Commencing (E) 29D-H2864		Quantity	MODIFICATIONS		REMARKS
		Part Number	Illus. No.		New Part Number	Change Point	
	Carburetters—*continued*						
1	Float	AUC1123	30	2			
2	Lid—float chamber—front carburetter	AUC4260	31	1			
3	Lid—float chamber—rear carburetter	AUC4261		1			
4	Washer—lid	AUC1147	32	2			
5	Needle and seat assembly	AUC8170	33	2			
6	Lever—hinged	AUC1980	34	2			
7	Pin—lever	AUC1152	35	2			
8	Nut—cap—lid	AUC1867	36	2			
9	Washer—nut (aluminium)	AUC1557	37	2			
10	Banjo vent and drain pipe	AUC3200	38	2		Fin. (E) 29D-H6394 except 6369, 6374-6380, 6382, 6389, 6390, 6392	
11	Washer (fibre)	AUC1928	39	2			
12	Bolt—banjo	AUC2698	40	2			
13	Washer—bolt (fibre)	AUC2141	41	4			
14	Filter	AUC2239	42	2			
15	Valve—slow running	AUC2028	43	2			
16	Spring—valve	AUC2027	44	2			
17	Washer—dished (brass)	AUC2030	45	2			
18	Washer—gland (Neoprene)	AUC2029	46	2			
19	Body—thermo	AUC8961	47	1			
20	Jet—accelerator	AUC4759	48	1			
21	Needle assembly—accelerator	AUC8129	49	1			
22	Spring—needle—green	AUC3127	50	1		Fin. (E) 29D-H3790	Use AUC1041 for this application
23	Spring—needle—blue	AUC1041	50	1		Com. (E) 29D-H3791 Fin. (E) 29D-H6394 except 6369, 6374-6380, 6382, 6389, 6390, 6392	
24	Shield—dust	AUC1054	51	1			
25	Finger—spring	AUC3139	52	1			
26	Screw—finger	AUA1453	53	2			
27	Washer—shakeproof—screw	LWN403	54	2			
28	**Solenoid assembly**	**AUC3177**	**55**	**1**			Part No. change: was AUA4643
29	Plunger and valve assembly	AUC8179	56	1		Fin. (E) 29D-H6394 except 6369, 6374-6380, 6382, 6389, 6390, 6392	
30	Spring—conical—valve	AUC3146	57	1			
31	Plate—spring locating	AUC1024	58	1			
32	Cap—end—moulded	AUC4795	59	1			
33	Strap—securing	AUC4797	60	1			
34	Screw—clamping	AUC4790	61	1			

Item No.	DESCRIPTION	Commencing (E) 29D-H2864 Part Number	Illus. No.	Quantity	MODIFICATIONS New Part Number	MODIFICATIONS Change Point	REMARKS
	Carburetters—*continued*						
1	Bracket—thermo body	AUC2085	62	1			
2	Washer—bracket (fibre)	AUC4753	63	2			
3	Casting—pipe	AUC2087	64	1			
4	Bolt—casting to thermo body	AUC2693	65	1			
5	Washer—bolt (fibre)	AUC2141	66	1			
6	Bolt—casting to float chamber	AUC2086	67	1			
7	Washer—bolt (aluminium)	AUC1557	68	1			
8	Washer—bolt (fibre)	AUC2089	69	1			
9	Spindle—throttle—front carburetter	AUC4838	70	1			
10	Spindle—throttle—rear carburetter	AUC4839	71	1			
11	Disc—throttle	AUC3280	72	2			
12	Screw—disc	AUC1358	73	4			
13	Plate—anchor—return spring	AUC1037	74	2			
14	Spring—return	AUC4781	75	2		Fin. (E) 29D-H6394 except 6369, 6374-6380, 6382, 6389, 6390, 6392	
15	Clip—return spring	AUC4771	76	2			
16	Bolt—clip	AUC2669	77	2			
17	Washer—bolt	AUC4612	78	2			
18	Nut—bolt	AJD8014Z	79	2			Part No. change; was AUC2673
19	Lever—throttle	AUC1313	80	1			
20	Bolt—lever	AJD1042	81	1			Part No. change; was AUC2694
21	Washer—spring—bolt	LWZ303	82	1			Part No. change; was AUC2246
22	Nut—bolt	AJD8012Z	83	1			
23	Stop—throttle—rear carburetter	AUC2079	84	1			
24	Pin—taper—stop	AUC2106	85	1			
25	Rod—connecting—throttle	AUC2419	86	1			
26	Coupling—rod	AUC4834	87	2			
27	Bolt—coupling	AUC2669	88	4			
28	Washer—bolt	AUC4612	89	4			
29	Nut—bolt	AJD8014Z	90	4			Part No. change; was AUC2673

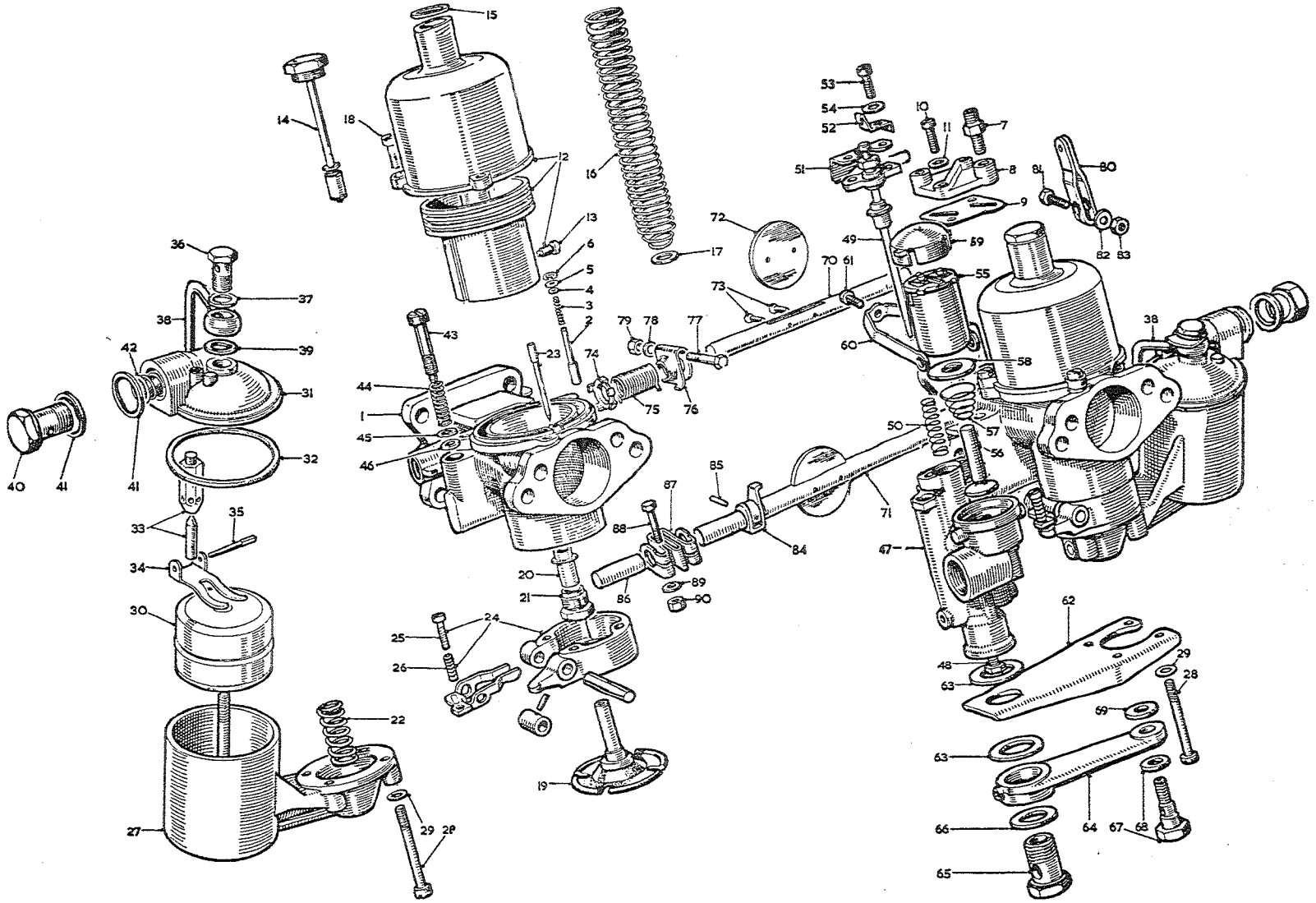

To face page D.12

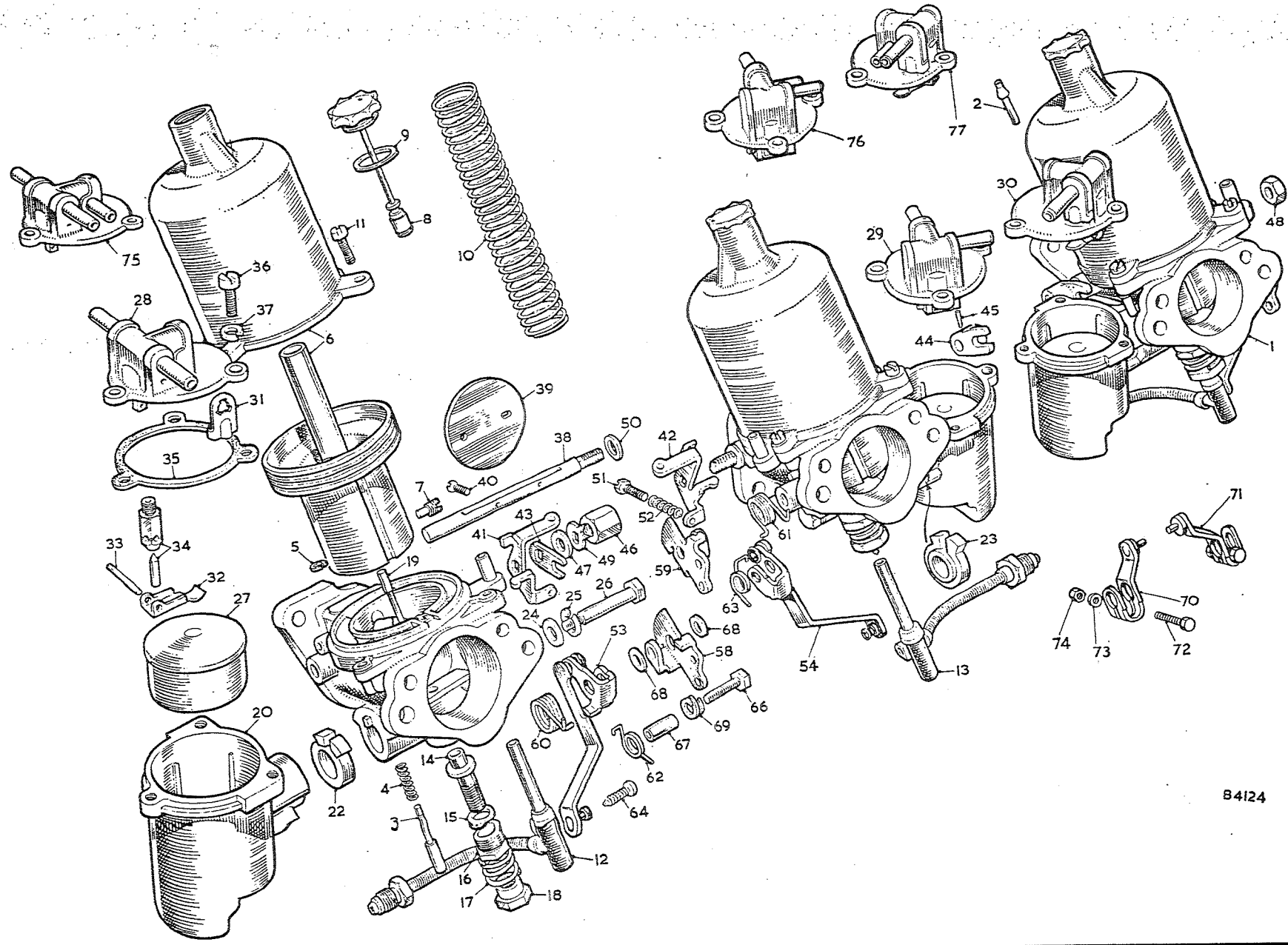

To face page D.13

Item No.	DESCRIPTION	Commencing (E) 29E-H101 Part Number	Illus. No.	Quantity	MODIFICATIONS New Part Number	MODIFICATIONS Change Point	REMARKS
	Carburetters—*continued*						
1	**Carburetter installation**	**AUD18**		1			
2	**Carburetter assembly—front**	**AUC9160**		1			
3	**Carburetter assembly—centre**	**AUC9161**		1			
4	**Carburetter assembly—rear**	**AUC9162**		1			
5	Body—front carburetter	AUC8723		1			
6	Body—centre carburetter	AUC8733		1			
7	**Body—rear carburetter**	**AUC8724**	1	1			
8	Tube—auto ignition—rear carburetter	AUC8471	2	1			
9	Pin—piston lifting	AUC1249	3	3			
10	Spring—pin	AUC1151	4	3			
11	Circlip—pin	AUC1250	5	3			
12	**Chamber and piston assembly**	**AUC8067**	6	3			
13	Screw—needle locking	AUC2057	7	3			
14	Cap and damper assembly	AUC8114	8	3			
15	Washer—cap (fibre)	AUC4900	9	3			
16	Spring—piston—red	AUC4387	10	3			
17	Screw—chamber to body	AUC2175	11	9			
18	Jet assembly—front and rear carburetters (red sleeve)	AUC8782	12	2	AUD9150	] DAU	
19	Jet assembly—centre carburetter (blue sleeve)	AUC8783	13	1	AUD9151	] 2525	
20	Bearing—jet	AUC8460	14	3			
21	Washer—jet housing (brass)	AUC8478	15	3			
22	Screw—jet locking	AUC2002	16	3			
23	Spring—jet locking	AUC2114	17	3			
24	Screw—jet adjusting	AUC8461	18	3			
25	Needle—jet—rich (DJ)	AUD1127	19	3			
26	Needle—jet—standard (DK)	AUD1128	19	3			
27	Needle—jet—weak (DH)	AUD1126	19	3			
28	Chamber—float	AUC1310	20	3			
29	Adaptor—front and rear carburetter	AUD2062	22	2	AUD2178	] Com. (E) 29E-H929	
30	Adaptor—centre carburetter	AUD2063	23	1	AUD2179	] also 889, 890, 892	
31	Washer—plain	AUC1317	24	3			
32	Washer—spring	LWZ205	25	3		] Fin. (E) 29E-H928 except 889, 890, 892	
33	Mounting—flexible			3	AUC1318	] Com. (E) 29E-H929	
34	Washer—adaptor			3	AUC1329	] also 889, 890, 892	
35	Bolt—float chamber to body	AUC1319	26	3			
36	Float	AUC8453	27	3		Fin. (E) 29E-H2994	Not available; use AUC8667
37	Float assembly			3	AUC8667	Com. (E) 29E-H2995	] For use with lids AUC8790, AUC 8791, AUC8794, AUD9080, AUD 9081, AUD9082
	NUT - JET ASSY	AUD2129		2			] ADJ TO LIST AS INCLUDED PARTS OF JET ASSYS
	WASHER - JET ASSY	AUD2193		2			
	GLAND - JET ASSY	AUD2194		3			
	FERRULE - JET ASSY	AUD2195		2			] (AUD9150 & AUD9151 DAU 2525)

Item No.	DESCRIPTION	Commencing (E) 29E-H101		Quantity	MODIFICATIONS		REMARKS
		Part Number	Illus. No.		New Part Number	Change Point	
	Carburetters—*continued*						
1	**Lid—front carburetter**	**AUC8790**	28	1			**Not available; use AUE267**
2	**Lid—centre carburetter**	**AUC8791**	29	1		**Fin. (E) 29E-H1091**	**Not available; use AUE268**
3	**Lid—rear carburetter**	**AUC8794**	30	1			**Not available; use AUE271**
4	**Lid—front carburetter**		75	1	**AUD9082**		**Not available; use AUE275**
5	**Lid—centre carburetter**		76	1	**AUD9080**	**Com. (E) 29E-H1092**	**Not available; use AUE273**
6	**Lid—rear carburetter**		77	1	**AUD9081**		**Not available; use AUE274**
7	Plate—baffle—lid	AUC1215	31	3			
8	**Lid assembly—front carburetter**	**AUE267**		1		**Fin. (E) 29E-H1091**	
9	**Lid assembly—centre carburetter**	**AUE268**		1			
10	**Lid assembly—rear carburetter**	**AUE271**		1	**AUE275**		
11	**Lid assembly—front carburetter**			1	**AUE273**	**Com. (E) 29E-H1092**	
12	**Lid assembly—centre carburetter**			1	**AUE274**		
13	**Lid assembly—rear carburetter**			1			
14	Lid—front carburetter	AUD9253		1		Fin. (E) 29E-H1091	
15	Lid—centre carburetter	AUD9254		1			
16	Lid—rear carburetter	AUD9257		1			
17	Lid—front carburetter			1	AUD9206		
18	Lid—centre carburetter			1	AUD9204	Com. (E) 29E-H1092	
19	Lid—rear carburetter			1	AUD9205		
20	Float	AUD9202		3			
21	Pin—hinge	AUC1152		3			
22	Needle and seat assembly	AUD9096		3			
23	Lever—hinged	AUC8475	32	3		Fin. (E) 29E-H2994	Not available; use float AUC8667
24	Pin—lever	AUC1152	33	3			
25	Needle and seat assembly	AUC8170	34	3			For use with lids AUC8790, AUC 8791, AUC8794, AUD9080, AUD 9081, AUD9082
26	Washer—lid	AUC8459	35	3			
27	Screw—lid to float chamber	AUC2175	36	9			Part No. change; was AUC2241
28	Washer—spring—screw	LWZ303	37	9			
29	Spindle—throttle	AUC1302	38	3			
30	Disc—throttle	AUC3116	39	3			
31	Screw—disc	AUC1358	40	6			
32	Lever—throttle return—front and rear carburetters	AUD2134	41	2	AUD2198		AUD2134 not available; use AUD2198
33	Lever—throttle return—centre carburetter	AUD2133	42	1	AUD2199		AUD2133 not available; use AUD2199
34	Lever—lost motion—front carburetter	AUC1400	43	1			
35	Lever—lost motion—centre and rear carburetters	AUC1421	44	2			

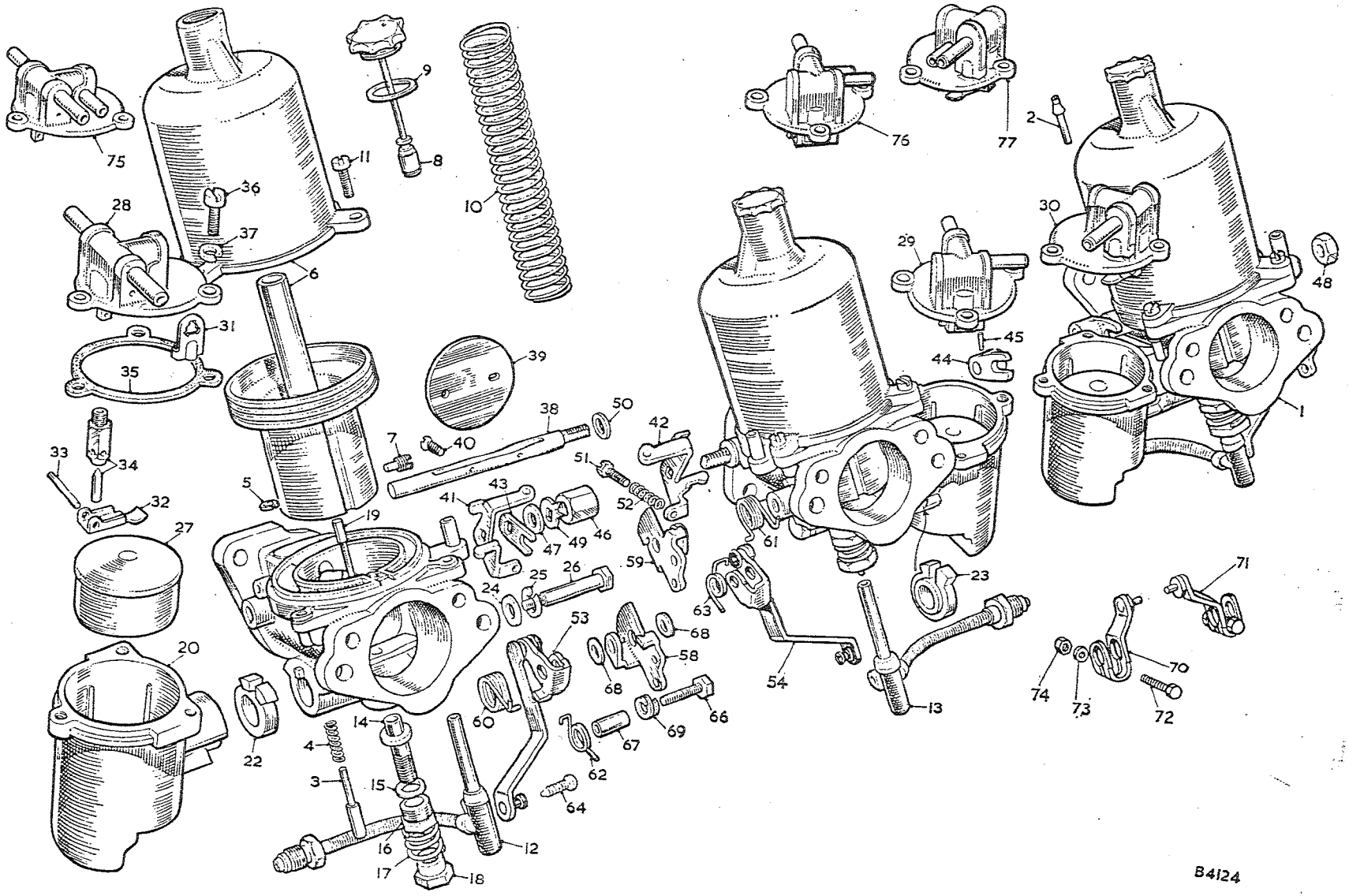

To face page D.14

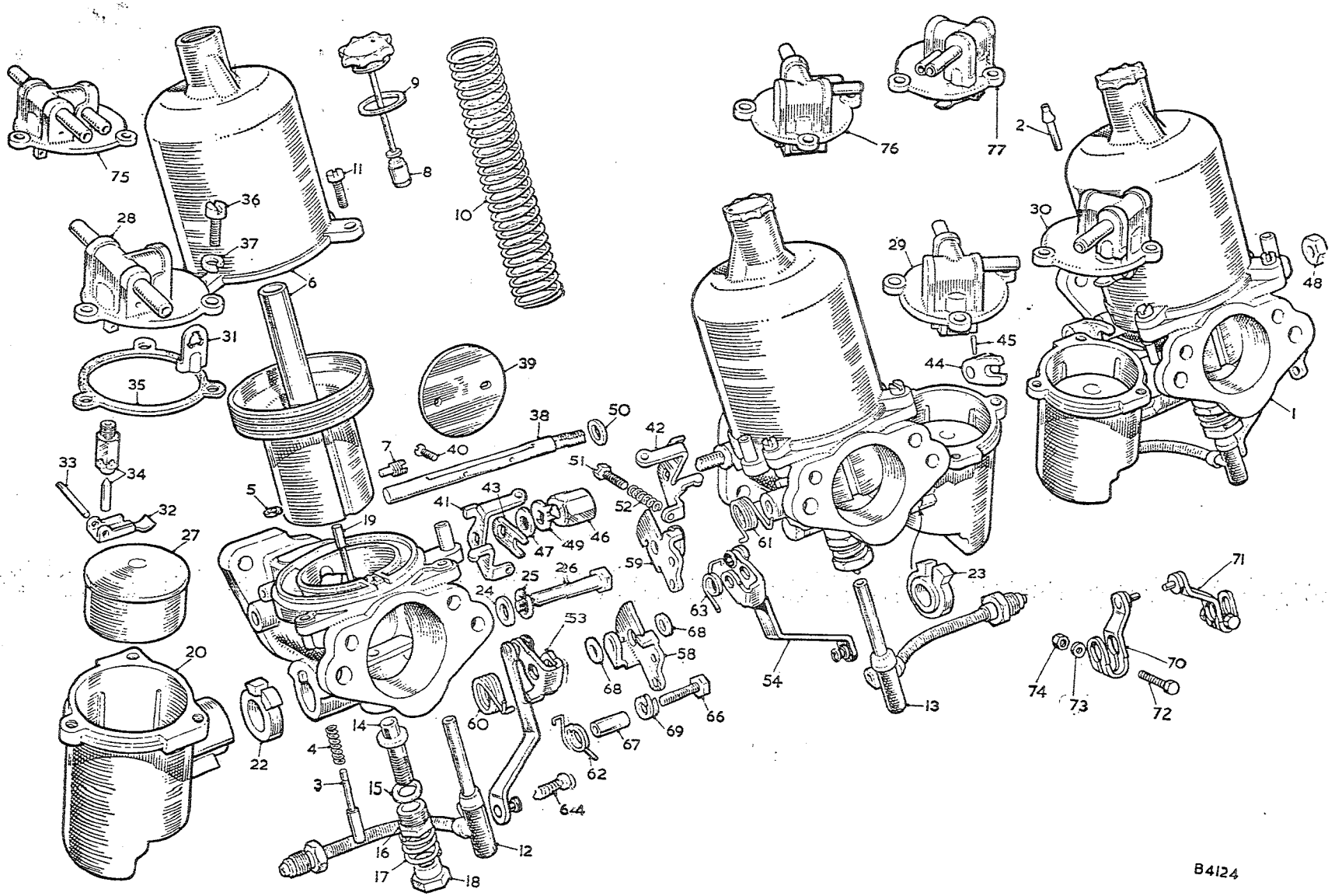

To face page D.15

Item No.	DESCRIPTION	Commencing (E) 29E-H101 Part Number	Illus. No.	Quantity	MODIFICATIONS New Part Number	MODIFICATIONS Change Point	REMARKS
	Carburetters—*continued*						
1	Pin—taper—lost motion lever—centre and rear carburetters	AUC2106	45	2			
2	Nut—lever—front and centre carburetters	AUC1424	46	2			
3	Washer—plain—nut	AUC1130	47	2			
4	Nut—lever—rear carburetter	AJD8104Z	48	1			
5	Washer—tab	AUC1206	49	3			Part No. change; was AUC1189
6	Washer—spacing	AUC2625	50	3			
7	Screw—throttle stop	AUC8483	51	6			
8	Spring—screw	AUC2451	52	6			
9	**Lever and link assembly—front and rear carburetters**	**AID9092**	53	2			
10	**Lever and link assembly—centre carburetter**	**AUD9093**	54	1			
11	Lever—pick-up—front and rear carburetters	AUC8457		2			Not available; use AUD9092 and AUD9093
12	Lever—pick-up—centre carburetter	AUC1374		1			
13	Link—front and rear carburetters	AUC1443		2			
14	Link—centre carburetter	AUC1444		1			
15	Washer—starlock—link	AUC5002		3			
16	Bush	AUD2136		3			
17	Lever—cam—front and rear carburetters	AUD2162	58	2	AUD2164		AUD2162 not available; use AUD2164
18	Lever—cam—centre carburetter	AUD2161	59	1	AUD2163		AUD2161 not available; use AUD2163
19	Spring—pick-up lever—front and rear carburetters	AUC8462	60	2			
20	Spring—pick-up lever—centre carburetter	AUC1375	61	1			
21	Spring—cam lever—front and rear carburetters	AUD2050	62	2			
22	Spring—cam lever—centre carburetter	AUD2049	63	1			
23	Screw—link	AUD2104	64	3	PTZ605		For AUD2104 use PTZ605 for this application
24	Bolt—pivot—lever	AUC8400	66	3			
25	Tube—pivot bolt	AUC8473	67	3			
26	Washer—plain—pivot bolt	AUC5032	68	6			
27	Washer—spring—pivot bolt	AUD2076	69	3			
28	**Lever—lost motion pick-up—front carburetter**	**AUD9057**		1			**Not available; use AUE87**
29	**Lever—lost motion pick-up—centre carburetter**	**AUE86**	70	1			**Part No. change; was AUD9031**
30	**Lever—lost motion pick-up—rear carburetter**	**AUE87**	71	1			**Part No. change; was AUD9032**
31	Bolt—lever	AJD1042	72	3			Part No. change; was AUC2694
32	Washer—plain—bolt	AJD8012Z	73	3			Part No. change; was AUC2156
33	Nut—bolt	AUC8396	74	3			

Item No.	DESCRIPTION	Commencing (E) 29D-H101 Part Number	Illus. No.	Quantity	MODIFICATIONS New Part Number	MODIFICATIONS Change Point	REMARKS
	Carburetters—*continued*			1	**AEC970**	**Com. (E) 29D-H2684**	**Not available; use AEC999**
1	**Adaptor—3-way carburetter**		1	1	AEC999	Com. (E) 29D-H4405 except 6369, 6374-6380, 6382, 6389, 6390, 6392 Fin. (E) 29D-H6394	
2	Adaptor—3-way rear carburetter		2	1	AEC973		
3	Nut—adaptor		3	1	AED102	Com. (E) 29D-H2864 except 6369, 6374-6380, 6382, 6389, 6390, 6392 Fin. (E) 29D, 6394	
4	Olive		4	1	**AEC975**		
5	**Pipe—3-way adaptor to manifold—front**		5	1	AEC976		
6	Pipe—3-way adaptor to manifold—centre		6	1	AEC977		
7	Pipe—3-way adaptor to manifold—rear		7	1	**AEC961**		
8	**Switch—thermal**		8	1	**AEC2068**	**Com. (E) 29E-H101**	
9	**Pipe—balance**				**AEC2115**	**Com. (E) 29E-H929 also 889, 890, 892**	
10	**Hose—balance pipe**		9	3	**AEC2055**	**Com. (E) 29E-H101**	
					AEC2119	**Com. (E) 29E-H929 also 889, 890, 892**	
11	Clip—hose		10	6	HCS116	Com. (E) 29E-H101	For HCS116 use HCS091 for this application
					HCS0913	Com. (E) 29E-H5155	
12	**Adaptor—balance pipe**		11	3	**AEC2053**	**Com. (E) 29E-H101**	
					AEC2118	**Com. (E) 29E-H929 also 889, 890, 892**	
13	Bracket—countershaft support		12	1	AEC2074	Com. (E) 29E-H101	
					AEC2120	Com. (E) 29E-H929 also 889, 890, 892	
14	Bearing		13	2	AEC2076		
15	Countershaft—throttle control		14	1	AEC2080		
16	**Lever—throttle—countershaft**		15	2	**AUD9054**		
17	Ball end		16	2	AUC1153		Part No. change; was AUC2694
18	Screw—clamping		17	2	AJD1042		Part No. change; was AUC2156
19	Nut—screw		18	2	AJD8012Z	Com. (E) 29E-H101	Part No. change; was AUC2246
20	Washer—spring—screw		19	2	LWZ303		
21	Stop—countershaft		20	1	AUC1380		
22	Screw—countershaft stop		21	1	AUC2542		
23	**Lever—throttle—front**		22	1	**AEC2059**		
24	Ball end		23	1	AEC2091		
25	**Lever—throttle—rear**		24	1	**AEC2062**		
26	Ball end		25	1	AEC2091		

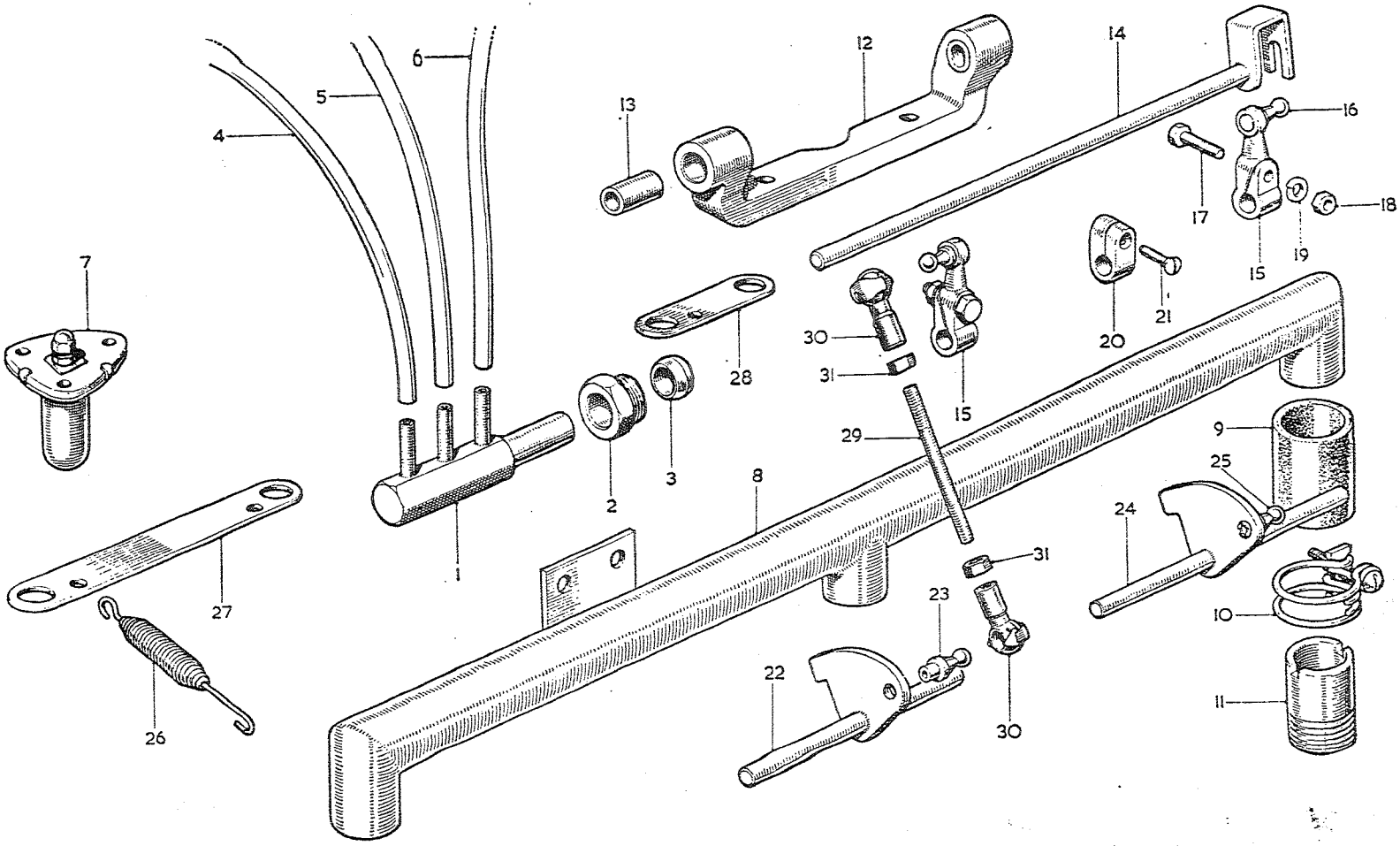

To face page D.16

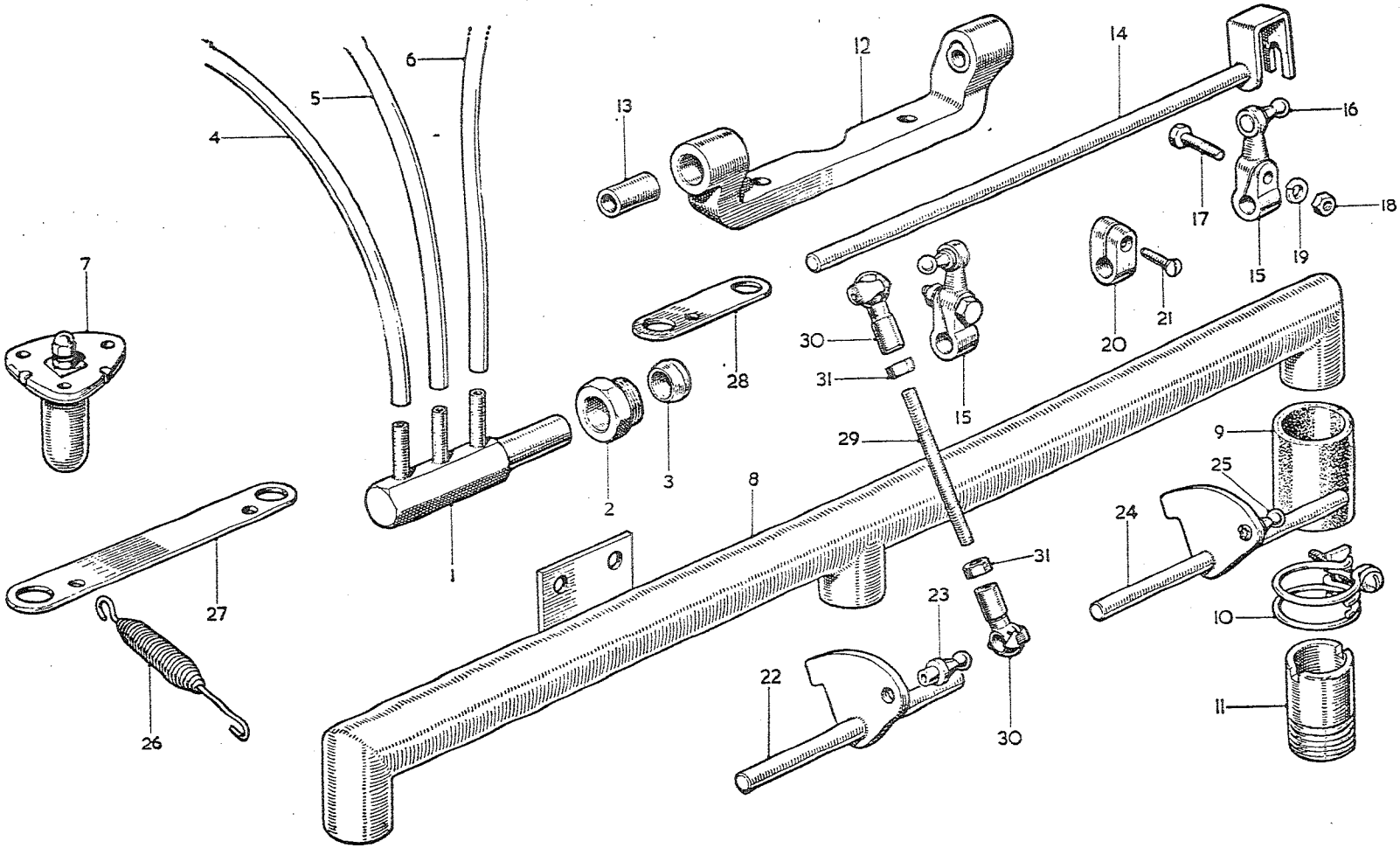

To face page D.17

Item No.	DESCRIPTION	Commencing (E) 29D-H101		Quantity	MODIFICATIONS		REMARKS
		Part Number	Illus. No.		New Part Number	Change Point	
	Carburetters—*continued*						
1	Spring—throttle return		26	3	AEC2075 AEC2127	Com. (E) 29E-H101 Com. (E) 29E-H929 also 889, 890, 892	
2	Bracket—spring retaining—front and centre		27	1	AEC2057		
3	Bracket—spring retaining—rear		28	1	AEC2058		
4	Rod—connecting—throttle		29	2	AEC2073	Com. (E) 29E-H101	
5	Socket—ball joint		30	4	AEC2070		
6	Locknut—socket		31	4	AJD8012Z		Part No. change; was AUC2156

Item No.	DESCRIPTION	Commencing (C) 101 Part Number	Illus. No.	Quantity	MODIFICATIONS New Part Number	MODIFICATIONS Change Point	REMARKS
	AIR CLEANER						
1	Cleaner—rear carburetter	11B619	1	1	AHB9909		11B619 no longer available; use AHB9909 — Alternatives
2	Cleaner—rear carburetter	11B622	1	1	~~USE AHB 9909~~		
3	Cleaner—front carburetter	11B618	2	1	USE 11B 621		Alternatives
4	Cleaner—front carburetter	11B621 ✓	2	1		Fin. (C) 13750	
5	Joint washer—cleaner to carburetter	AEC375	3	3/2			Quantity reduced from (C) 2194 to 5233 BN7, 5309 BT7, except 2446 and 2457
6	Screw—cleaner to carburetter	HZS0506	4	2/4			Quantity increased from (C) 2194 to 5233 BN7, 5309 BT7, except 2446 and 2457
7	Screw—cleaner to carburetter	HZS0507		2		Fin. (C) 2193; also 2446, 2457 Com. (C) 5234 BN7, 5310 BT7 Fin. (C) 13750	
8	Washer—plain—screw	PWZ105	5	4		Fin. (C) 13750	
9	Washer—spring—screw	LWZ205	6	4			
10	Bracket—choke cable trunnion	11B623	7	1		Fin. (C) 2193; also 2446, 2457 Com. (C) 5324 BN7, 5310 BT7 Fin. (C) 13750	
11	Cleaner—front and rear carburetters		2	2	AHB9023		
12	Cleaner—rear carburetter		1	1	AHB9024		
13	Joint washer—cleaner to carburetter		3	3	ACG5184		
14	Stud—cleaner to carburetter			6	FHS2510	Com. (C) 13751	
15	Washer—plain—stud			6	PWZ105		
16	Nut—stud			6	FNZ105		
17	Connection—cleaner to rocker cover (rubber)	~~1G2268~~ 12B702	8	1	AHB9056		
18	Clip—connection	AEC442	9	2	HCS0709		AEC442 not available; use HCS0709
19	Pipe—breather	AEC702	10	1			
20	Elbow—breather pipe	AEC440	11	1	12B704		AEC440 not available; use 12B704
21	Hose—pipe	AEC441	12	1			
22	Clip—hose	AEC442	13	2	HCS0709		AEC442 not available; use HCS0709

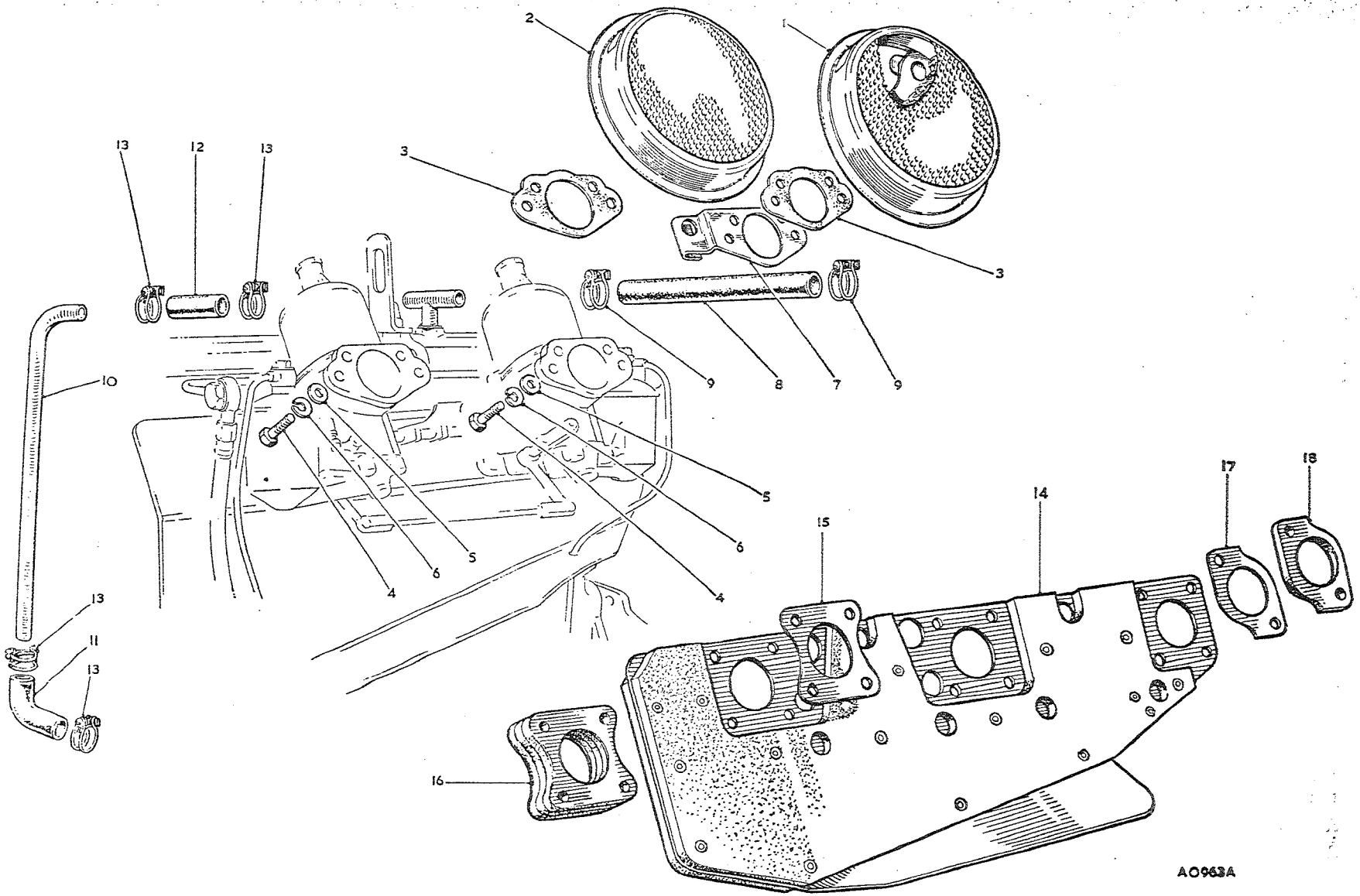

To face page D.18

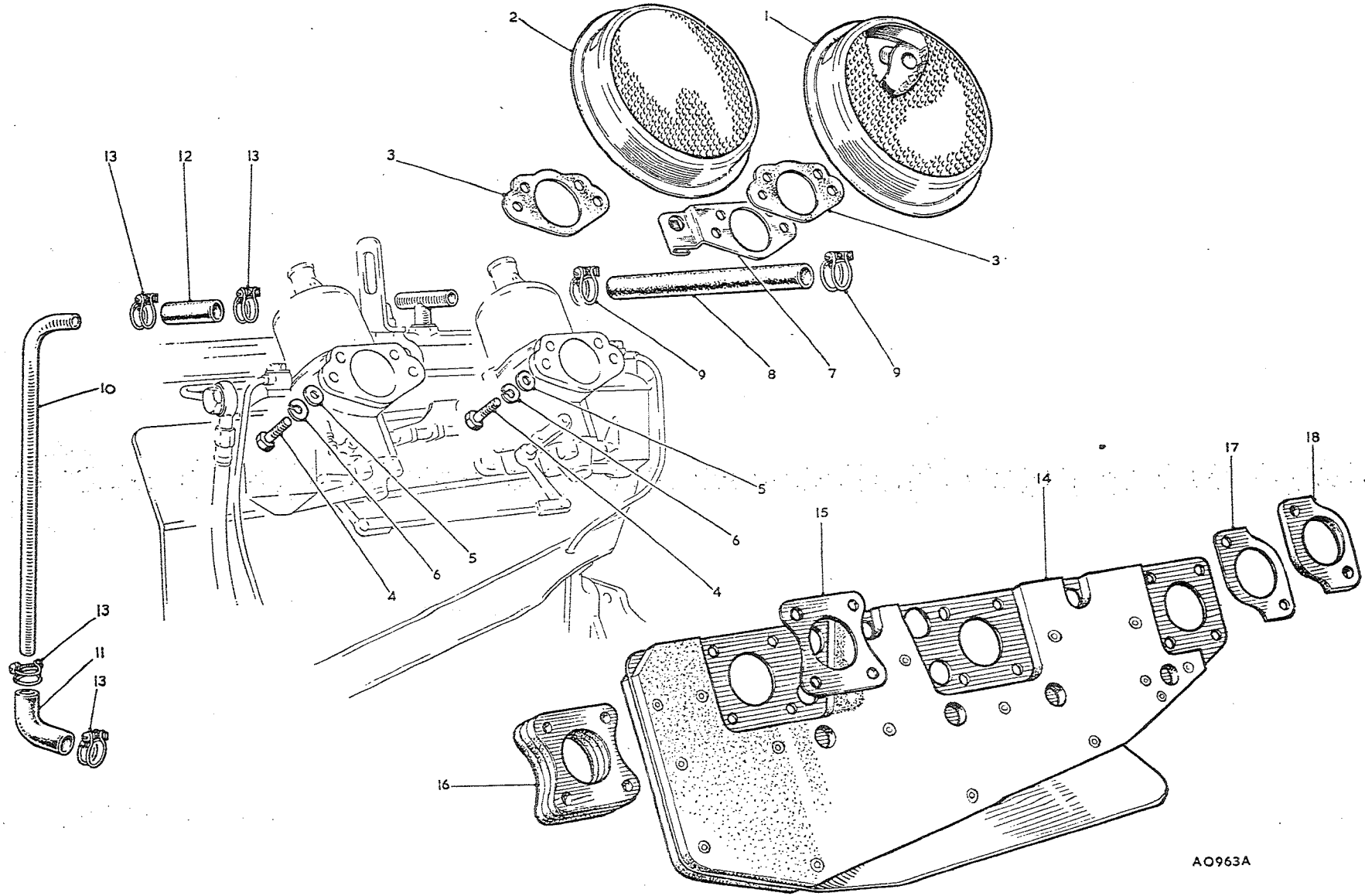

To face page D.19

Item No.	DESCRIPTION	Commencing (E) 29D-H101		Quantity	MODIFICATIONS		REMARKS
		Part Number	Illus. No.		New Part Number	Change Point	
	HEAT SHIELD						
1	Shield—heat	AEC1357	14	1	AEC2065 AEC2128	Com. (E) 29E-H101 Com. (E) 29E-H929 also 889, 890, 892 Fin. (E) 29D-H26212	
2	Joint washer—carburetter to heat shield	AED308	15	2			
3	Distance piece—insulating—heat shield to manifold	AEC368	16	2			
4	Joint washer—carburetter to heat shield and heat shield to manifold		17	6	AEC2083	Com. (E) 29E-H101 Fin. (E) 29E-H928 except 889, 890, 892	AEC2083 not available; use AEC2183
					AEC2183		
5	Distance piece—carburetter to heat shield		18	3	AEC2126	Com. (E) 29E-H929 also 889, 890, 892	
6	Joint—heat shield to manifold		17	3	AEC2083		AEC2083 not available; use AEC2183
					AEC2183	Com. (E) 29E-H5590	

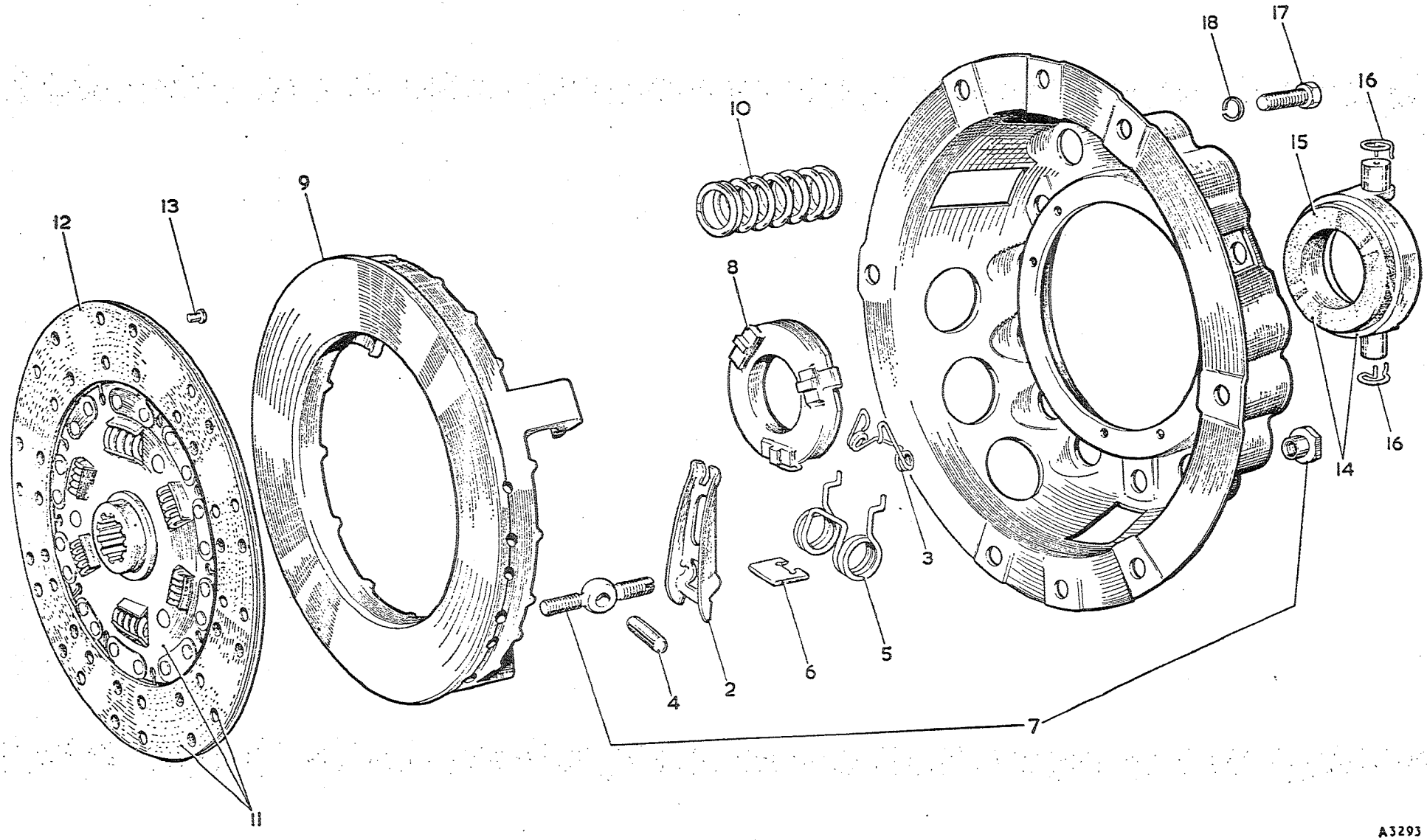

To face page E.1

Item No.	DESCRIPTION	Commencing (E) 29D-H101 Part Number	Illus. No.	Quantity	MODIFICATIONS New Part Number	MODIFICATIONS Change Point	REMARKS
	CLUTCH						
	CLUTCH COMPONENTS						
1	**Cover assembly—clutch**	**AEJ16**		1	**AEJ30**	→ FIN (E) 29F-H4878 (PAU 2242) **Com. (E) 29D-H156**	
2	Cover—clutch	NSP		1			
3	Lever—release	7H3239	2	3			
4	Retainer—lever	7H3001	3	2			
5	Pin—lever	7H3067	4	3			
6	Spring—anti-rattle	7H3092	5	3			
7	Strut—release lever	7H3069	6	3			
8	Eyebolt and nut	7H3240	7	3			
9	Eyebolt	7H3195		3			Not available; use 7H3193 with 7H3195
10	Nut	7H3193		3			
11	Plate—release lever	7H3042	8	1			
12	Plate—pressure	27H3234	9	1			
13	Spring—pressure plate	7H3011	10	12	7H3082	Com. (E) 29D-H156	
14	**Plate assembly—driven**	~~AEJ17~~	11	1	USE B4408 B-B FIN (E) 29F-H4878	(PAU 2242)	
15	Linings and rivets	8G8355	12	1 set			
16	Rivet	7H3078	13	42			Part No. change; was 7H 3139
17	**Bearing assembly—release**	**7H3120**	14	1		FIN (E) 29F-H4878 (PAU 2242)	
18	Bearing	7H3251 WSE	15	1	N L A		PAU 2510
19	Retainer—bearing to clutch fork	7H3048	16	2			
20	Screw—clutch to flywheel	HNS0607	17	6			
21	Washer—spring—screw	LWN206	18	6			
	COVER ASSY - CLUTCH	13H1581	WSE	1	13H1739		PAU 2487
	COVER STRAPS, DIAPHRAGM SPRING, STRAP DRIVE AND RELEASE PLATE ASSY	17H9660		1		COM (E) 29F-H4879	
	PRESSURE PLATE AND CLIPS ASSY	17H3749		1	PAU		
	PLATE ASSY - DRIVEN	13H378		1	2242	5537 Borg & Beck	
	LINING + RIVETS	8G9811		1 SET			
	RIVETS	7H3078		33			
	BEARING ASSY - RELEASE	13H1583		1			

Item No.	DESCRIPTION	Commencing (C) 101 Part Number	Illus. No.	Quantity	MODIFICATIONS New Part Number	MODIFICATIONS Change Point	REMARKS
	CLUTCH PEDAL AND LINKAGE						
1	**Lever—clutch pedal**	**11B5271**	1	1	**AHB9183**	**Com. (C) 16039 BN7, 15881 BT7**	
2	Bush	1G9310	2	1			
3	Pad—pedal	1B8750	3	1	1B8871	Com. (C) 16039 BN7, 15881 BT7 Fin. (C) 16038 BN7, 15880 BJ7	
4	Distance piece—clutch pedal pad	11B5323	4	2			
5	Bolt—pad to lever	HBZ0411	5	2			
6	Nut—bolt	FNZ104	6	2			
7	Washer—spring—nut	LWZ304	7	2			
8	Rubber—clutch pedal pad	1B8751	8	1			
9	**Master cylinder assembly**	**11B5510**	9	1			
10	Body	NSP		1			
11	Plunger	17H4755	37	1	17H8113		17H4755 not available; use 17H8113 with 17H8112
12	Seal—plunger	7H4976	38	1	17H8112		Use 17H8112 for 7H4976 for this application
13	Spring	7H4944	10	1			
14	Push rod	17H4513	11	1			
15	Seal—valve	17H4561	39	1			
16	Stem—valve	7H4751	40	1			
17	Retainer—spring	17H4827	41	1			
18	Spacer—valve	17H4132	42	1			
19	Washer—spring	7H4752	43	1			
20	Seal—taper end	17H4509	44	1			For use with plunger 17H4755 Not required when 17H8112 fitted
21	Cover—dust	7H4757	45	1			
22	Circlip	7H4451	46	1			
23	**Service kit—master cylinder**	**8G8104**		1			**8G8104 not available; use 8G8807**
24	Seal—plunger	7H4976		1			
25	Seal—valve	17H4561		1			
26	Washer—spring	7H4752		1			
27	Seal—taper end	17H4509		1			
28	Cover—dust	7H4757		1			
29	Circlip	7H4451		1			
30	Tube of grease	NSP		1			
31	**Service kit—master cylinder**			1	**8G8807**		
32	Seal—plunger			1	17H8112		
33	Seal—valve			1	17H4561		
34	Washer—spring			1	7H4752		
35	Cover—dust			1	17H4831		
36	Circlip			1	7H4451		
37	Tube of grease			1	NSP		

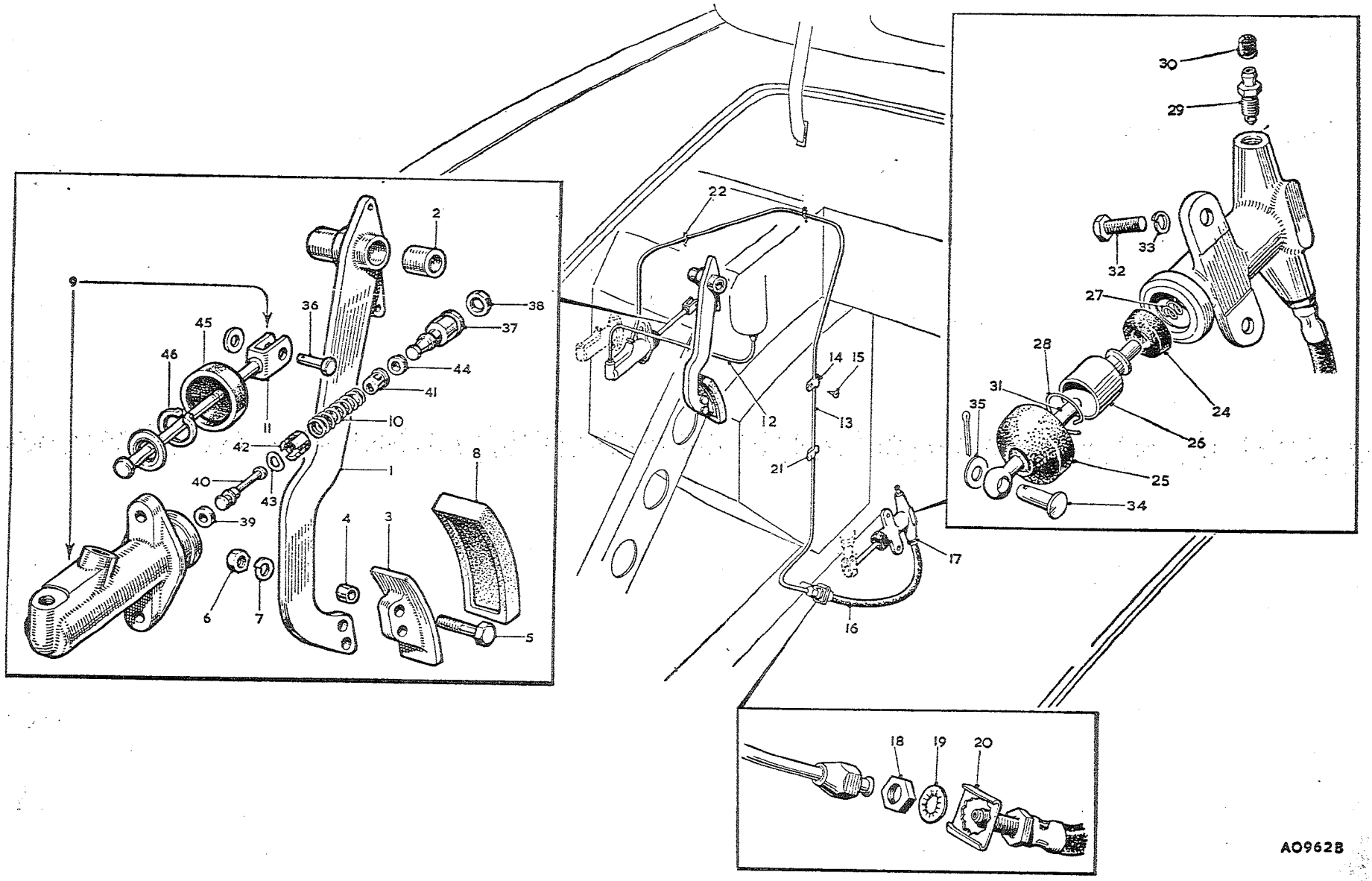

To face page E.2

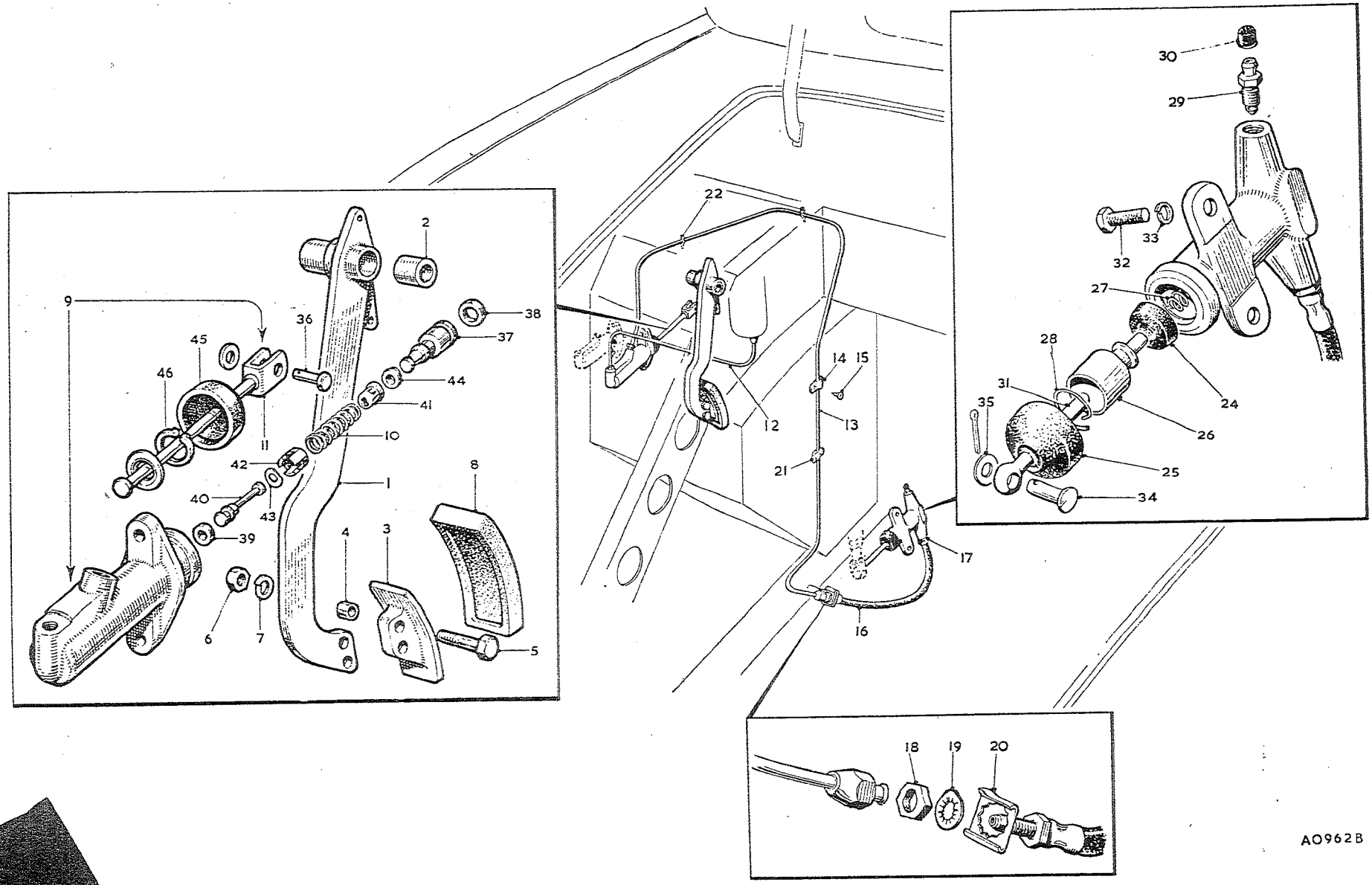

To face page E.3

Item No.	DESCRIPTION	Commencing (C) 101 Part Number	Illus. No.	Quantity	MODIFICATIONS New Part Number	MODIFICATIONS Change Point	REMARKS
	Clutch Pedal and Linkage—*continued*						
1	Pipe—supply tank to master cylinder **RHD**	17H4517	12	1			
2	Pipe—supply tank to master cylinder **LHD**	17H4516		1			
3	Pipe—master cylinder to flexible hose	11B5294	13	1	AHB8939	Com. (C) 5398 BN7, 5200 BT7	11B5294 not available; use AHB8939
4	Clip—pipe to pedal box **RHD**	PCR0307	14	1			
5	Screw—fixing clip **RHD**	PTZ1004	15	1		Fin. (C) 5397 BN7, 5199 BT7	
6	Pipe—master cylinder to flexible hose **LHD**	11B5298		1			
7	Clip—pipe to pedal box side inner RH	PCR0307	14	1			
8	Screw—fixing clip	PMZ0806		1			
9	Washer—spring—screw	LWZ203		1			
10	Hose—flexible	1G9516	16	1			
11	Gasket—hose	3H2287	17	1			
12	Nut—hose	FNZ206	18	1			
13	Washer—shakeproof—nut	LWN406	19				Part No. change; was 2K7131 and LWN606
14	Plate—locking	1G9622	20	1			
15	Clip—clutch pipe to pedal box	1G9529	21	1			
16	Clip—clutch pipe to dash **LHD**	6K35	22	2			
17	**Cylinder—clutch operating**	**BHA4112**		1			
18	Body	NSP					
19	Seal	17H4327	24	1	17H4712		For 17H4329 use 17H4712 for this application
20	Cover—dust	17H4010	25	1			
21	Plunger	17H4554	26	1			
22	Spring	7H4970	27	1			
23	Circlip	17H4011	28	1			
24	Screw—bleeder	7H4973	29	1			
25	Cover—dust—bleeder screw	7H4419	30	1			
26	Push rod—clutch operating cylinder	BHA4134	31	1			
27	Set screw—fixing—cylinder	HZS0608	32	2			
28	Washer—spring—set screw	LWZ306	33	2			
29	Joint pin—clutch withdrawal lever to operating cylinder	2K5622	34	1			
30	Washer—plain—joint pin	PWZ105	35	1			
31	**Service kit—clutch operating cylinder**	**8G8249**		1			
32	Seal	17H4712		1			
33	Cover—dust	17H4010		1			
34	Circlip	17H4011		1			
35	Ball—bleeder screw	7H4030		1			
36	Cover—dust—bleeder screw	7H4419		1			
37	Tube of grease	NSP		1			
38	Joint pin—pedal lever to master cylinder	CLZ0513	36	1			

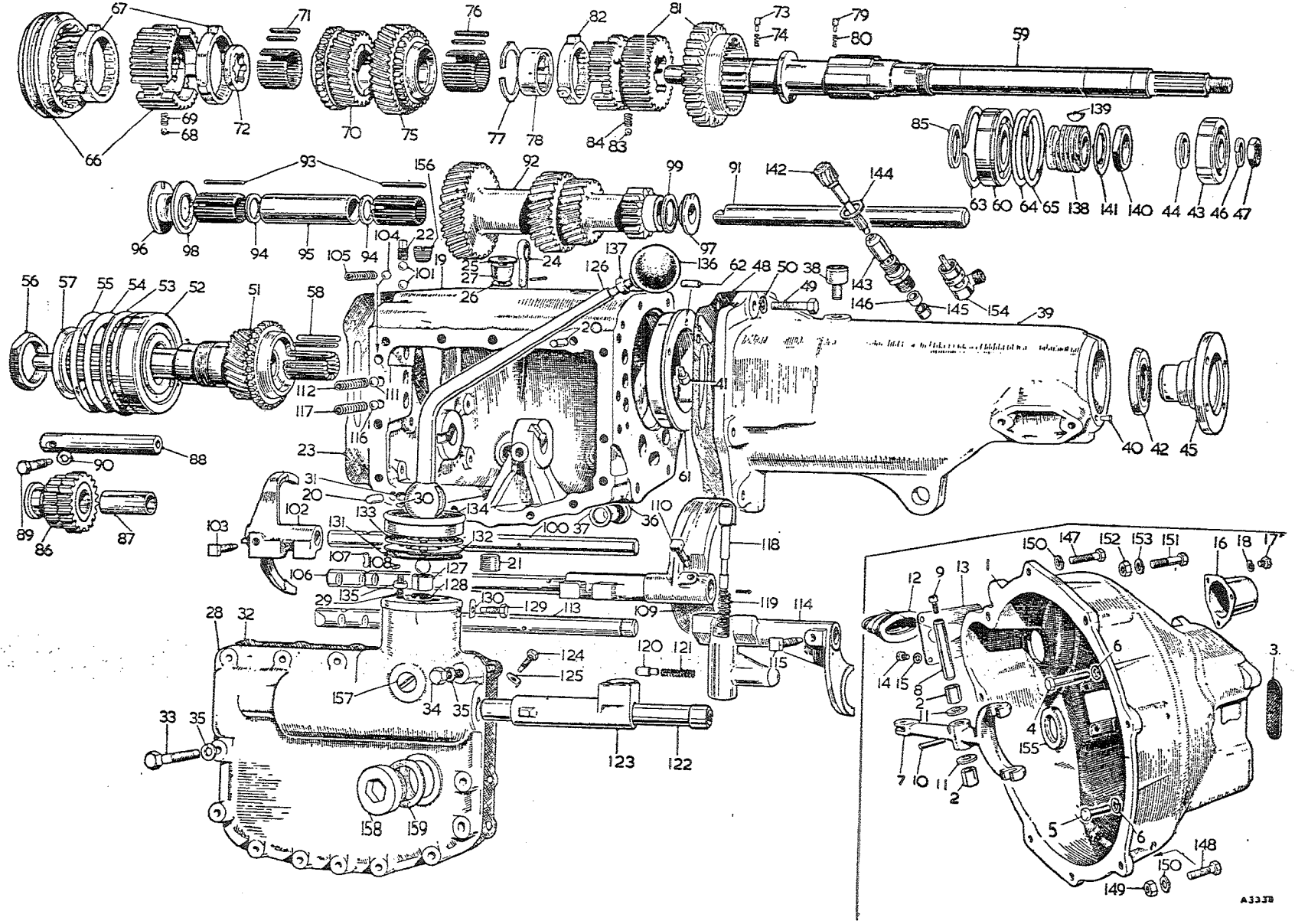

To face page F.1

GEARBOX

Item No.	DESCRIPTION	Commencing (E) 29D-H101 Part Number	Illus. No.	Quantity	MODIFICATIONS New Part Number	MODIFICATIONS Change Point	REMARKS
1	**Gearbox assembly**	**AEC3523**		1			
2	**Housing—clutch**	**AEC3534**	1	1			
3	Bush—fork and lever shaft	AEC3102	2	2			
4	Pad—buffer	AEC3298	3	1			
5	Seal—oil	1B3719	155	1	10K7089		1B3719 not available; use 10K7089
6	Bolt—housing to gearbox—2¼" (5·71 cm.)	HBN0518	4	1			
7	Bolt—housing to gearbox—1⅛" (2·85 cm.)	HNS0509	5	7			Part No. change; was HBN0509
8	Washer—spring—bolt	LWN205	6	8			
9	**Fork and shaft assembly—clutch withdrawal**	**AEC3088**		1			
10	Fork and lever—clutch	AEC3324	7	1			
11	Shaft—fork and lever	AEC3104	8	1			
12	Screw—shaft blanking	AEC3221	9	1			
13	Pin—taper—shaft to fork	TPS0610	10	1			
14	Washer—thrust—fork and shaft	AEC3105	11	2			
15	Seal—fork and shaft	AEC3106	12	1			
16	Plate—seal retaining	AEC3168	13	1			
17	Screw—plate	53K1435	14	3			
18	Washer—spring—screw	LWN204	15	3			
19	Cover—starter end	1B3346	16	1		Fin. (E) 29E-H2245	
20	Screw—cover to housing	AEC3207	17	1			
21	Washer—spring—screw	LWN204	18	3			
22	**Case—gearbox**	**AEC3513**	19	1			
23	Dowel—side cover	1K1754	20	2			
24	Plug—oil drain	6K499	21	1			
25	Plug—interlock ball hole	AEC479	22	1			
26	Plug—taper	AEC3455	156	1			
27	Joint—case to clutch housing	AEC3195	23	1			
28	**Indicator—oil level**	**AEC3109**	24	1			
29	Washer—large	2K9799	25	1			
30	Washer—small	6K9829	26	1			
31	Washer (felt)	1G3804	27	1			
32	Cover—gearbox side	AEC3323	28	1			
33	Plug—small—side cover	AEC385	157	1			
34	Plug—large—side cover	8G500	158	1			
35	Washer—plug	6K432	159	1			
36	Stud—change speed lever cover	53K462	29	3			
37	Washer—spring—stud	LWZ204	30	3			
38	Nut—stud	FNZ104	31	3			
39	Joint—cover to gearbox	AEC3176	32	1			

Item No.	DESCRIPTION	Commencing (E) 29D-H101 Part Number	Illus. No.	Quantity	MODIFICATIONS New Part Number	MODIFICATIONS Change Point	REMARKS
	Gearbox—*continued*						
1	Bolt—cover to gearbox—2¾" (6·98 cm.)	HBN0522	33	1			
2	Bolt—cover to gearbox—1½" (3·81 cm.)	HBN0512	34	12			
3	Washer—spring—bolt	LWN205	35	13			
4	Cap—control shaft boss	8G500	36	2			
5	Washer—cap	6K432	37	2			
6	Breather—gearbox	1G3668	38	1	1H3364		1G3668 not available; use 1H3364
7	**Casing—gearbox extension**	**1B5763**	39	1			
8	Plug—taper—casing	2K1345	40	1			
9	Button—speedometer pinion thrust	1A3073	41	1			1W.2540
10	Seal—oil	1B3767 WSE	42	1	1H7941	Fin. (E) 29E-H2.45	
11	Bearing	2K5505	43	1			
12	Washer—bearing	1B3766	44	1			
13	Flange—coupling	ATC7100	45	1			
14	Washer—spring—flange	LWZ212	46	1			
15	Nut—flange	FNZ612	47	1			
16	Joint—casing to gearbox	AEC3142	48	1			
17	Bolt—casing to gearbox	HBN0510	49	8			
18	Washer—spring—bolt	LWN205	50	8			
19	Gear—drive	(AEC3358)	51	1	AEC3472	Com. (E) 29D-H11342 Fin. (E) 29E-H2245	
20	Bearing—drive gear	6K777	52	1			
21	Circlip—bearing	6K780	53	1			
22	Plate—bearing	AEC3184	54	1			
23	Plate—spring—bearing	AEC3183	55	1			
24	Nut—bearing	AEC3124	56	1			
25	Washer—lock—nut	AEC3185	57	1			
26	Roller—needle—drive gear	AEC3186	58	18			
27	Mainshaft	AEC3417	59	1		Fin. (E) 29E-H2245	
28	Bearing—mainshaft	6K681	60	1			
29	**Housing—bearing**	**AEC3533**	61	1			
30	Peg—locating	AEC3112	62	1			
31	Circlip—bearing	1K3055	63	1			
32	Plate—bearing	AEB3105	64	1			
33	Plate—spring—bearing	AEC3178	65	1			
34	Hub with striking dog—sliding—top and third	AEC3072	66	1			
35	Interceptor—sliding hub	AEB3214	67	2	AEC3481	Com. (E) 29D-H14095 Fin. (E) 29E-H2245	AEB3214 not available; use AEC3481
36	Ball—sliding hub	BLS110	68	3		Fin. (E) 29E-H2245	
37	Spring—ball	AEC3208	69	3			

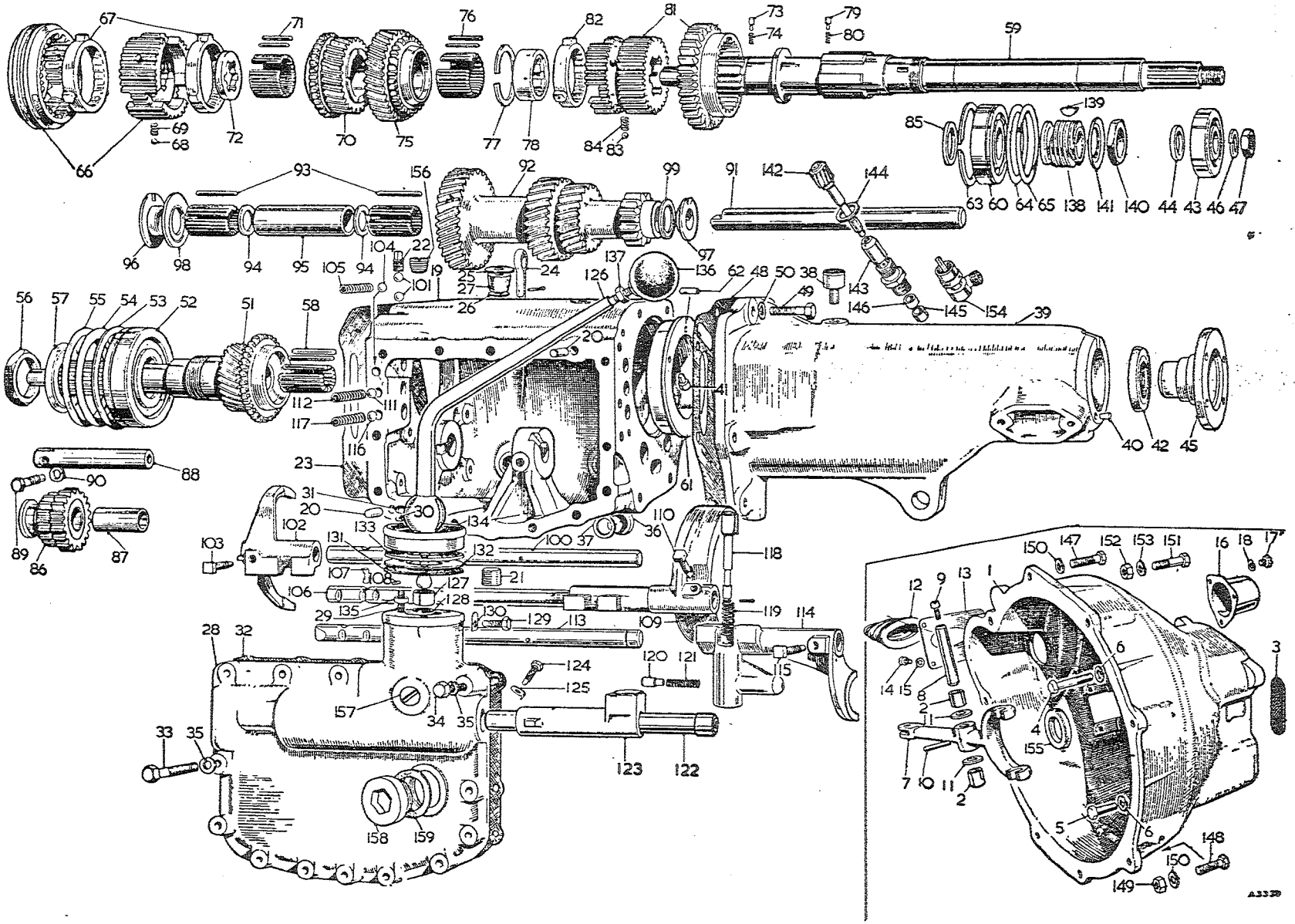

To face page F.2

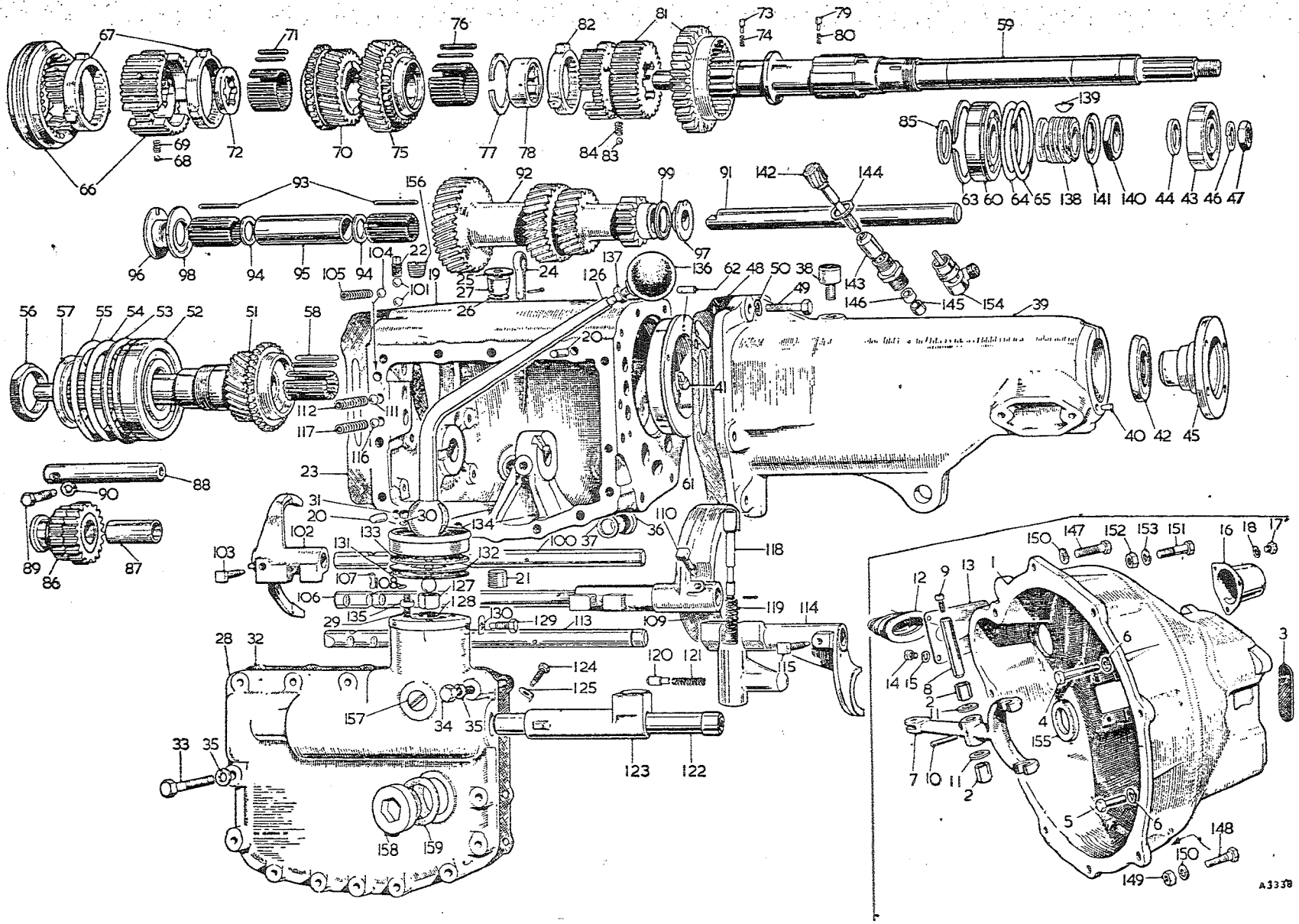

To face page F.3

Item No.	DESCRIPTION	Commencing (E) 29D-H101 Part Number	Illus. No.	Quantity	MODIFICATIONS New Part Number	MODIFICATIONS Change Point	REMARKS
	Gearbox—*continued*						
1	Gear—third speed	(AEC3355)	70	1	AEC3468	Com. (E) 29D-H11342 Fin. (E) 29E-H2245	
2	Roller—gear	AEC3180	71	32			
3	Plate—locking	AEC3193	72	1		Fin. (E) 29E-H2245	
4	Plunger—gear	AEC3181	73	1			
5	Spring—plunger	AEC3182	74	1			
6	Gear—second speed	(AEC3357)	75	1	AEC3469	Com. (E) 29D-H11342 Fin. (E) 29E-H2245	
7	Roller—gear	AEC3180	76	33			
8	Washer—gear	AEB3111	77	2			
9	Plate—locking	AEB3112	78	1		Fin. (E) 29E-H2245	
10	Plunger—gear	AEC3181	79	1			
11	Spring—plunger	AEC3182	80	1			
12	Gear with first and second sliding hub—first speed	AEC3507	81	1	AEC3539 AEC3566	Com. (E) 29D-H11342 Com. (G) 1824 Fin. (E) 29E-H2245	AEC3507 not available; use AEC3539
13	Interceptor—sliding hub	AEC3211	82	1	AEC3482	Com. (E) 29D-H14095 Fin. (E) 29E-H2245	AEC3211 not available; use AEC3482
14	Ball—sliding hub	BLS110	83	3			
15	Spring—ball	AEC3208	84	3		Fin. (E) 29E-H2245	
16	Distance collar—mainshaft	AEB3115	85	1			
17	**Gear—reverse**	**AEC3525**	**86**	**1**	**AEC3540** **AEC3656**	**Com. (E) 29D-H11342** **Com. (G) 1824** **Fin. (E) 29E-H2245**	
18	Bush—gear	AEC3119	87	1			
19	Shaft—gear	AEC3340	88	1			
20	Screw—shaft retaining	AEC3121	89	1			
21	Washer—spring—screw	LWN205	90	1			
22	Layshaft	AEB3203	91	1			
23	Gear unit—layshaft	(AEC3359)	92	1			
24	Gear unit with bushes—layshaft			1	AEC3471	Fin. (E) 29D-H11341 Com. (E) 29D-H11342 Fin. (E) 29D-H14909	Not available; use AEC3616 with 46 off AEB3212, 2 off AEB3204 and 1 off AEC3393
25	Gear unit—layshaft			1	AEC3616 AEC3649	Com. (E) 29D-H14910 Com. (G) 1824 Fin. (E) 29E-H2245	
26	Roller—gear unit	AEB3212	93	46		Fin. (E) 29D-H11341	
27	Washer—roller	AEB3204	94	2		Com. (E) 29D-H14910	
28	Spacer—roller	AEC3393	95	1		Fin. (E) 29E-H2245	

Item No.	DESCRIPTION	Commencing (E) 29D-H101 Part Number	Illus. No.	Quantity	MODIFICATIONS New Part Number	MODIFICATIONS Change Point	REMARKS
	Gearbox—*continued*						
1	Plate—gear unit thrust—front	AEC3115	96	1			
2	Plate—gear unit thrust—rear	AEC3116	97	1			
3	Washer—gear unit thrust—front	AEB3209	98	1			
4	Washer—gear unit thrust—rear	AEC3350	99	1	AEC3681		AEC3350 not available; use AEC3681
5	Shaft—top and third shifter	AEC3342	100	1			
6	Ball—shaft interlocking	BLS110	101	2			
7	Fork—striking—top and third	1B3707	120	1			
8	Screw—fork to shaft	AEB3130	103	1			
9	Ball—shifter shaft	BLS110	104	1			
10	Spring—ball	AEC3189	105	1			
11	**Shaft—first and second shifter**	**AEC3504**	**106**	**1**			
12	Pin—shaft interlocking	AEC3187	107	1			
13	Rivet—interlocking pin	AEC3188	108	1			
14	Fork—striking—first and second	1B3708	109	1			
15	Screw—fork to shaft	AEB3130	110	1			
16	Ball—shifter shaft	BLS110	111	1		Fin. (E) 29E-H2245	
17	Spring—ball	AEC3189	112	1			
18	Shaft—reverse shifter	AEC3343	113	1			
19	Fork—striking—reverse	AEC3322	114	1			
20	Screw—fork to shaft	AEB3130	115	1			
21	Ball—shifter shaft	BLS110	116	1			
22	Spring—ball	AEC3189	117	1			
23	Plunger—reverse selector	1B3710	118	1			
24	Spring—plunger	2F3189	119	1			
25	Plunger—detent	1B3836	120	1			
26	Spring—detent plunger	2K4909	121	1	22A75		2K4909 not available; use 22A75
27	Shaft—control	1B3713	122	1			
28	Lever—control	1B3706	123	1			
29	Screw—shaft locking	1G3581	124	1			
30	Washer—lock—screw	1B3363	125	1			

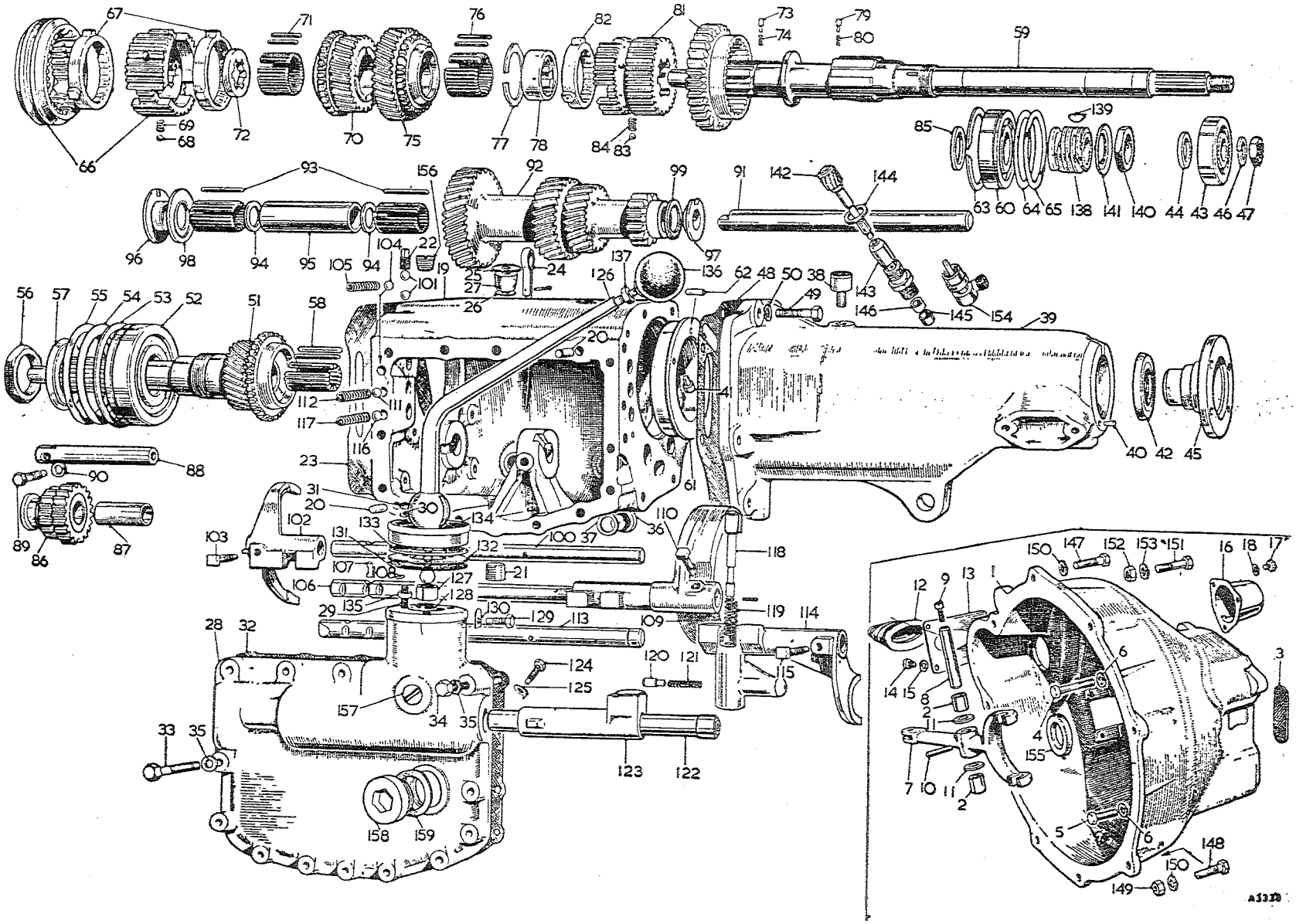

To face page F.4

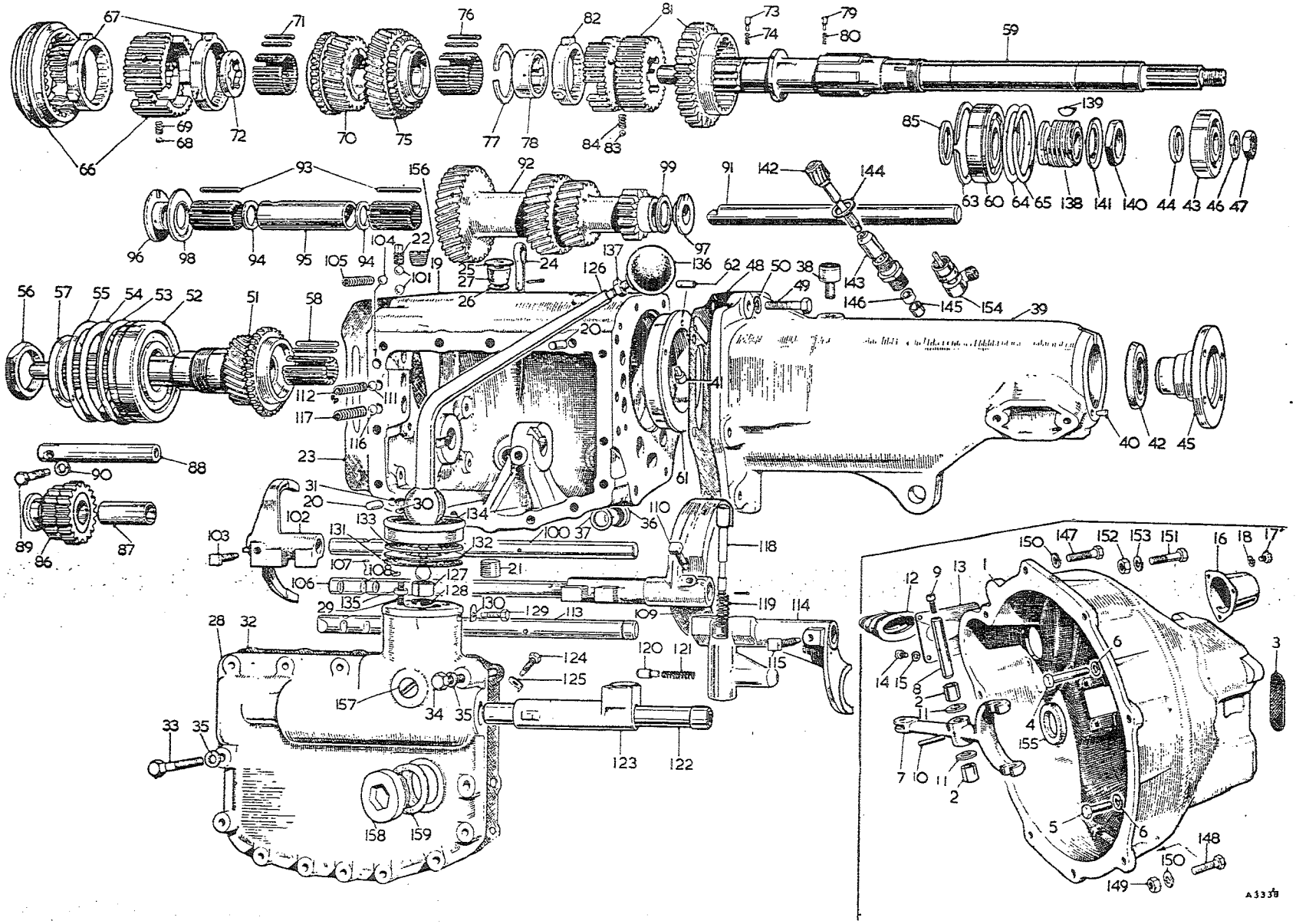

To face page F.5

Item No.	DESCRIPTION	Commencing (E) 29D-H101 Part Number	Illus. No.	Quantity	MODIFICATIONS New Part Number	MODIFICATIONS Change Point	REMARKS
	Gearbox—*continued*						
1	Lever—change speed	1B3760	126	1	AEC3480	Com. (E) 29D-H20598 Fin. (E) 29E-H2245	1B3760 not available; use AEC3480
2	**Bush—lever**	**AEC3520**	**127**	**1 pr.**			
3	Circlip—bush	1G3709	128	1			
4	Screw—lever locating	2F3166	129	1			
5	Washer—tab—screw	2F3040	130	1			
6	Washer—sealing—change speed lever	1B3632	131	1			
7	Seat—change speed lever	2F3151	132	1			
8	Pad—change speed lever packing	2F3152	133	1			
9	Cover—change speed lever	2F3154	134	1			
10	Distance piece—cover	1B3634	135	3			
11	Knob—change speed lever	1B3736	136	1			
12	Locknut—knob	54K1723	137	1			
13	Gear—speedometer	AEC3418	138	1			
14	Key—gear	WKN305	139	1			
15	Locknut—gear	AEB3162	140	1			
16	Washer—lock—gear	AEB3163	141	1		Fin. (E) 29E-H2245	
17	Pinion—speedometer	AEC3419	142	1			
18	Bearing—pinion	AEC3198	143	1			
19	Washer—bearing	2K7500	144	1			
20	Collar—pinion distance	AEB3202	145	1			
21	Seal—pinion oil	2A3254	146	1			
22	Bolt—clutch housing to rear plate—1½" (3·81 cm.)	HBN0612	147	1			
23	Washer—spring—bolt	LWN206	150	1			
24	Bolt—clutch housing to rear plate—1⅜" (3·50 cm.)	HBN0611	148	4			
25	Washer—spring—bolt	LWN206	150	4			
26	Nut—bolt	FNN106	149	4			
27	Dowel bolt—clutch housing to rear plate	AEC3224	151	2			
28	Washer—spring—dowel bolt	LWN206	153	2			
29	Nut—dowel bolt	FNN106	152	2			
30	Adaptor box—speedometer	1H3131	154	1			

Item No.	DESCRIPTION	Commencing (E) 29E-H2246 Part Number	Illus. No.	Quantity	MODIFICATIONS New Part Number	MODIFICATIONS Change Point	REMARKS
	Gearbox—*continued*						
1	**Gearbox assembly**	**AEC3555**		1			
2	**Housing—clutch**	**AEC3559**	1	1			
3	Bush—fork and lever shaft	AEC3102	2	2			
4	Pad—buffer	AEC3298	3	1			
5	Seal—oil	1B3719	4	1	10K7089		1B3719 not available; use 10K7089
6	Bolt—housing to gearbox—2¼" (5·71 cm.)	HBN0518	5	1			Part No. change; was HBN0509
7	Bolt—housing to gearbox—1⅛" (2·85 cm.)	HNS0509	6	8			
8	Washer—spring—bolt	LWN205	7	9			
9	**Fork and shaft assembly—clutch withdrawal**	**AEC3088**		1			
10	Fork and lever—clutch	AEC3324	8	1			
11	Shaft—fork and lever	AEC3104	9	1			
12	Screw—shaft blanking	AEC3221	10	1			
13	Pin—taper—shaft to fork	TPS0610	11	1			
14	Washer—thrust—fork and shaft	AEC3105	12	2			
15	Seal—fork and shaft	AEC3106	13	1			
16	Plate—seal retaining	AEC3168	14	1			
17	Screw—retaining plate	53K1435	15	3			
18	Washer—spring—screw	LWN204	16	3			
19	Cover—starter end	1B3346	17	1			
20	Screw—cover to housing	AEC3207	18	1			
21	Washer—spring—screw	LWN204	19	3			
22	**Case—gearbox**	**AEC3547**	20	1			
23	Plug—oil drain	6K499	21	1			
24	Plug—interlock ball hole	AEC479	22	1			
25	Joint—case to clutch housing	AEC3601	23	1			
26	**Indicator—oil level**	**AEC3683**	24	1			
27	Grommet (rubber)	AEC3461	25	2			
28	Cover—gearbox top	AEC3657	26	1			
29	Seal—oil—cover	AEJ51	27	1			
30	Plug—overdrive switch hole	AEC385	28	1			
31	Joint—cover to gearbox	AEC3492	29	1			
32	Bolt—cover to gearbox—1⅞" (4·76 cm.)	HBN0515	30	2			
33	Bolt—cover to gearbox—1½" (3·81 cm.)	HBN0512	31	10			
34	Washer—spring—bolt	LWN205	32	12			
35	Breather—gearbox	1H3364	33	1			
36	**Casing—gearbox extension**	**AEC3620**	34	1			
37	Plug—taper—casing	2K1343	35	1			
38	Button—speedometer pinion thrust	1A3073	36	1	[illegible]		PBU2441
39	Seal—oil	1B3767 W56	37	1			
40	Bearing	2K5505	38	1			
41	Washer—bearing	1B3766	39	1			

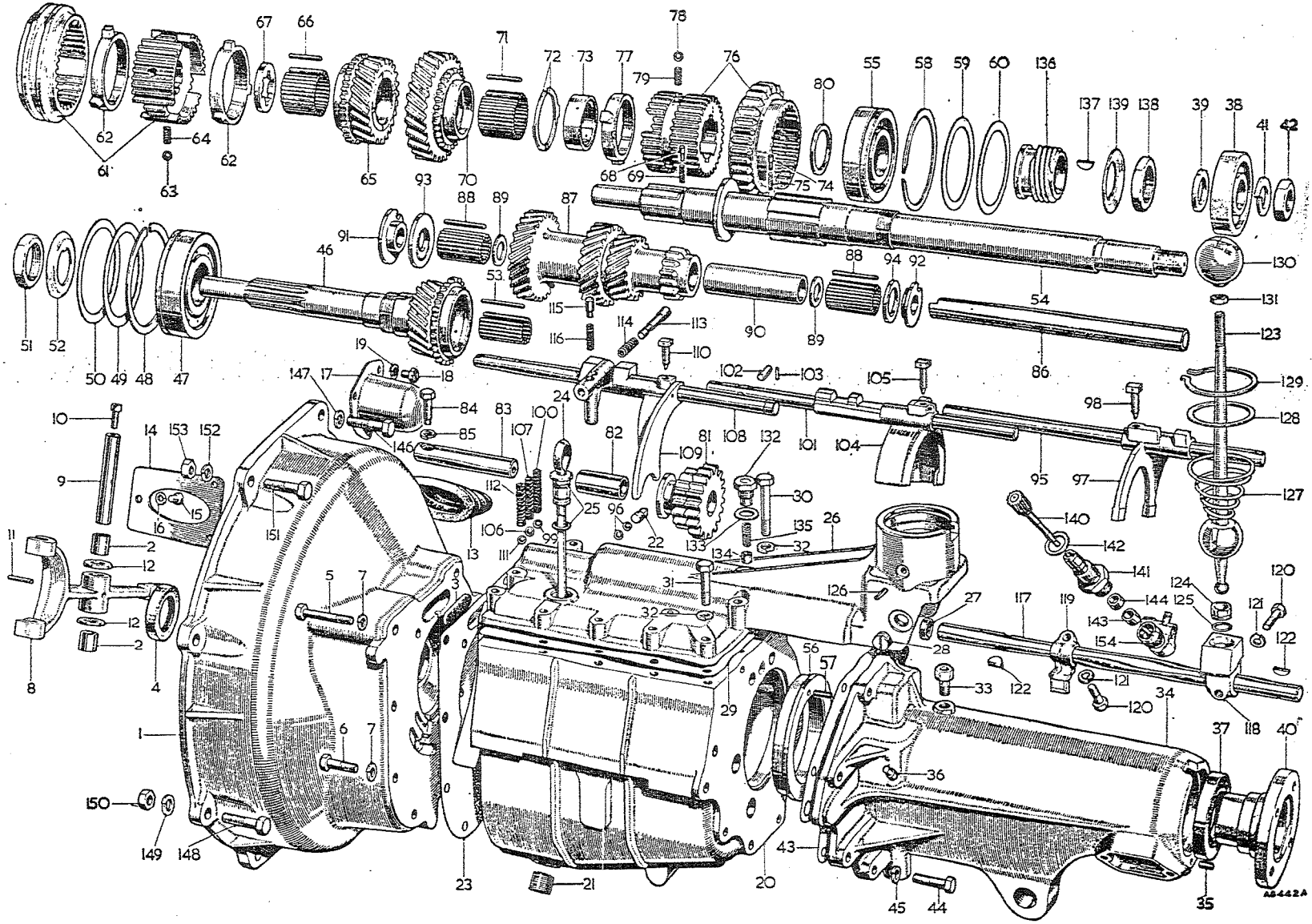

To face page F.6

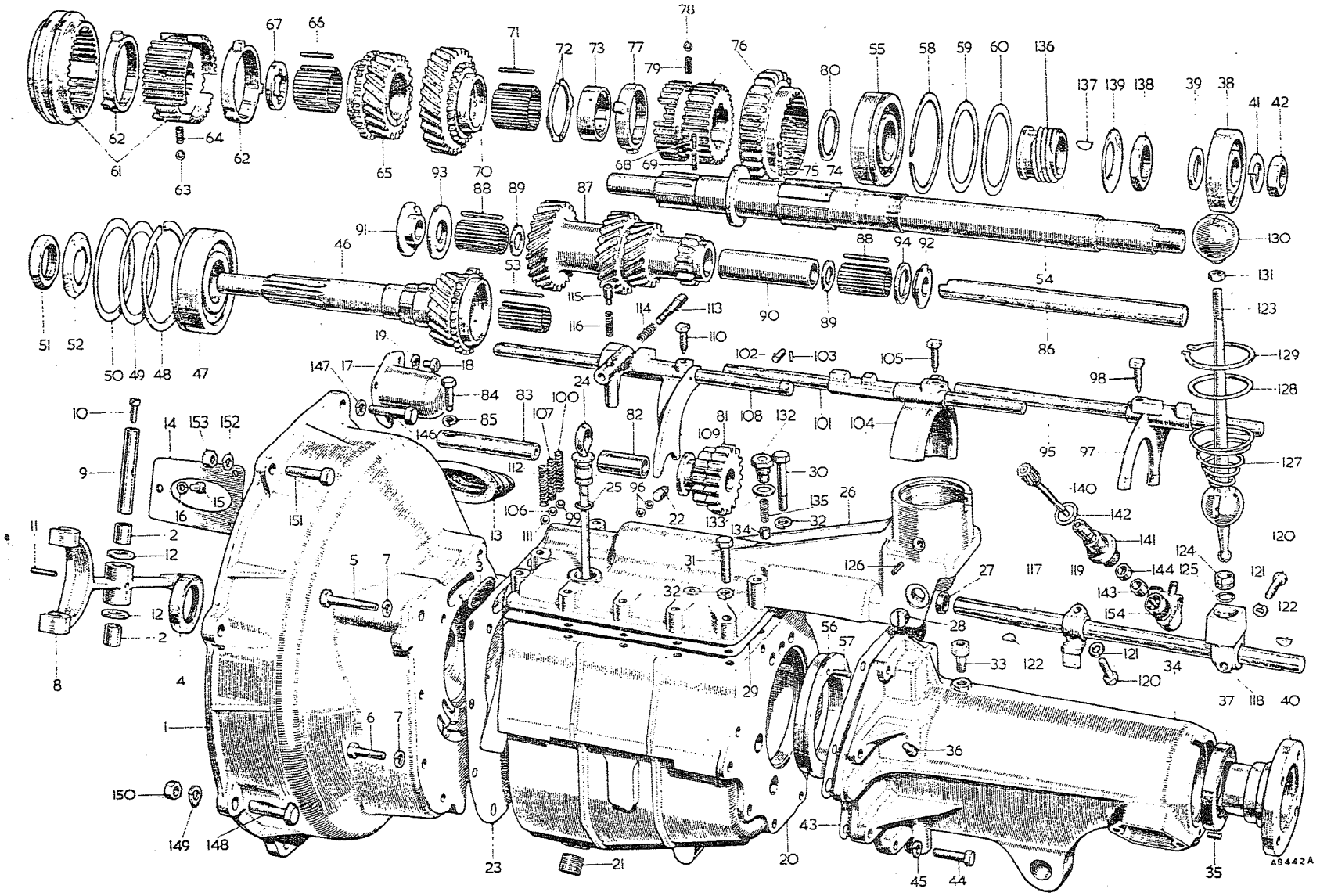

To face page F.7

Item No.	DESCRIPTION	Commencing (E) 29E-H2246 Part Number	Illus. No.	Quantity	MODIFICATIONS New Part Number	MODIFICATIONS Change Point	REMARKS
	Gearbox—*continued*						
1	Flange—coupling	ATC7100	40	1			
2	Washer—spring—flange	LWZ212	41	1			
3	Nut—flange	FNZ612	42	1			
4	Joint—casing to gearbox	AEC3605	43	1			
5	Bolt—casing to gearbox	HBN0510	44	8			
6	Washer—spring—bolt	LWN205	45	8			
7	Gear—drive	[8]AEC3472	46	1			
8	Bearing—drive gear	6K777	47	1			
9	Circlip—bearing	6K780	48	1			
10	Plate—bearing	AEC3184	49	1			
11	Plate—spring—bearing	AEC3183	50	1			
12	Nut—bearing	AEB3124	51	1			
13	Washer—lock—nut	AEC3185	52	1			
14	Roller—needle—drive gear	AEC3186	53	18			
15	Mainshaft	AEC3417	54	1			
16	Bearing—mainshaft	6K681	55	1			
17	**Housing—bearing**	**AEC3533**	**56**	1			
18	Peg—locating	AEC3112	57	1			
19	Circlip—bearing	1K3055	58	1			
20	Plate—bearing	AEB3105	59	1			
21	Plate—spring—bearing	AEC3178	60	1			
22	Hub with striking dog—sliding—top and third	AEC3072	61	1			
23	Interceptor—sliding hub	AEC3481	62	2			
24	Ball—sliding hub	BLS110	63	3			
25	Spring—ball	AEC3208	64	3			
26	Gear—third speed	AEC3468	65	1			
27	Roller—gear	AEC3180	66	32			
28	Plate—locking	AEC3193	67	1			
29	Plunger—gear	AEC3181	68	1			
30	Spring—plunger	AEC3182	69	1			
31	Gear—second speed	AEC3469	70	1			
32	Roller—gear	AEC3180	71	33			
33	Washer—gear	AEB3111	72	2			
34	Plate—locking	AEB3112	73	1			
35	Plunger—gear	AEC3181	74	1			
36	Spring—plunger	AEC3182	75	1			
37	Gear with first and second sliding hub—first speed	AEC3566	76	1	[illegible]		[illegible]
38	Interceptor—sliding hub	AEC3482	77	1			
39	Ball—sliding hub	BLS110	78	3			
40	Spring—ball	AEC3208	79	3			
41	Distance collar—mainshaft	AEB3115	80	1			

Item No.	DESCRIPTION	Commencing (E) 29E-H2246 Part Number	Illus. No.	Quantity	MODIFICATIONS New Part Number	MODIFICATIONS Change Point	REMARKS
					22R233	P/A 14; (AUF 910)	
	Gearbox—*continued*	**AEC3565**	**81**	**1**			
1	**Gear—reverse**	AEC3119	82	1			
2	Bush—gear	AEC3340	83	1			
3	Shaft—gear	AEC3121	84	1			
4	Screw—shaft retaining	LWN305	85	1			
5	Washer—spring—screw	AEB3203	86	1			
6	Layshaft	AEC3649	87	1			
7	Gear unit—layshaft	AEB3212	88	46			
8	Roller—gear unit	AEB3204	89	2			
9	Washer—roller	AEC3393	90	1			
10	Spacer—roller	AEC3115	91	1			
11	Plate—gear unit thrust—front	AEC3116	92	1			
12	Plate—gear unit thrust—rear	AEB3209	93	1			
13	Washer—gear unit thrust—front	AEC3350	94	1	AEC3681		AEC3350 not available; use AEC3681
14	Washer—gear unit thrust—rear	AEC3342	95	1			
15	Shaft—top and third shifter	BLS110	96	2			
16	Ball—shaft interlocking	AEC3625	97	1			
17	Fork—striking—top and third	AEB3130	98	1			
18	Screw—fork to shaft	BLS110	99	1			
19	Ball—shifter shaft	AEC3189	100				
20	Spring—ball	**AEC3557**	**101**	**1**			
21	**Shaft—first and second shifter**	AEC3187	102	1			
22	Pin—shaft interlocking	AEC3188	103	1			
23	Rivet—interlocking pin	AEC3624	104	1			
24	Fork—striking—first and second	AEB3130	105	1			
25	Screw—fork to shaft	BLS110	106	1			
26	Ball—shifter shaft	AEC3189	107	1			
27	Spring—ball	AEC3343	108	1			
28	Shafter—reverse shifter	AEC3626	109	1			
29	Fork—striking—reverse	AEB3130	110	1			
30	Screw—fork to shaft	BLS110	111	1			
31	Ball—shifter shaft	AEC3189	112	1			
32	Spring—ball	1B3710	113	1			
33	Plunger—reverse selector	2F3198	114	1			
34	Spring—plunger	1B3836	115	1			
35	Plunger—detent	22A75	116	1			
36	Spring—detent plunger	AEC3656	117	1			
37	Shaft—remote control	AEC3654	118	1			
38	Socket—change speed lever						

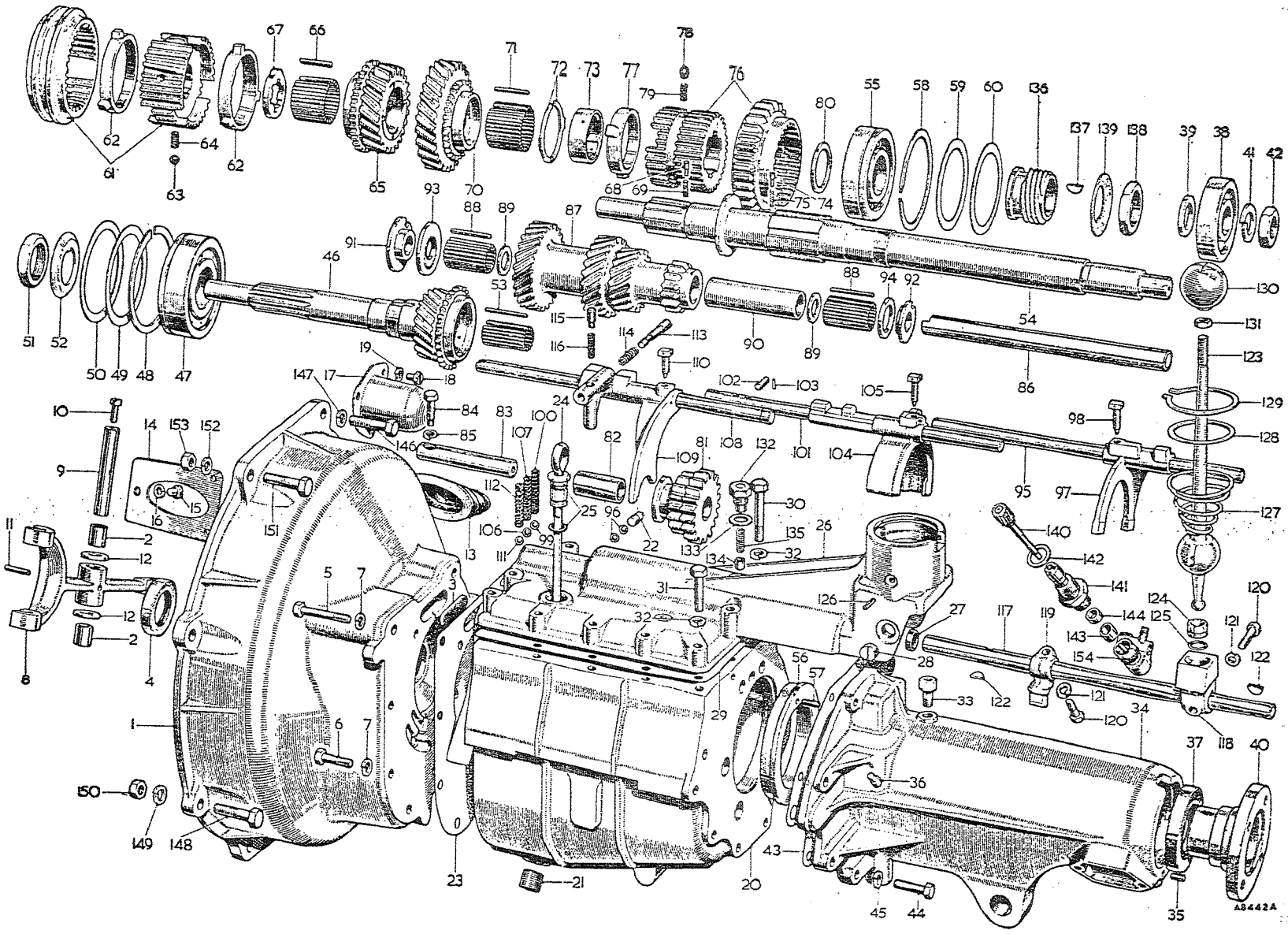

To face page F.8

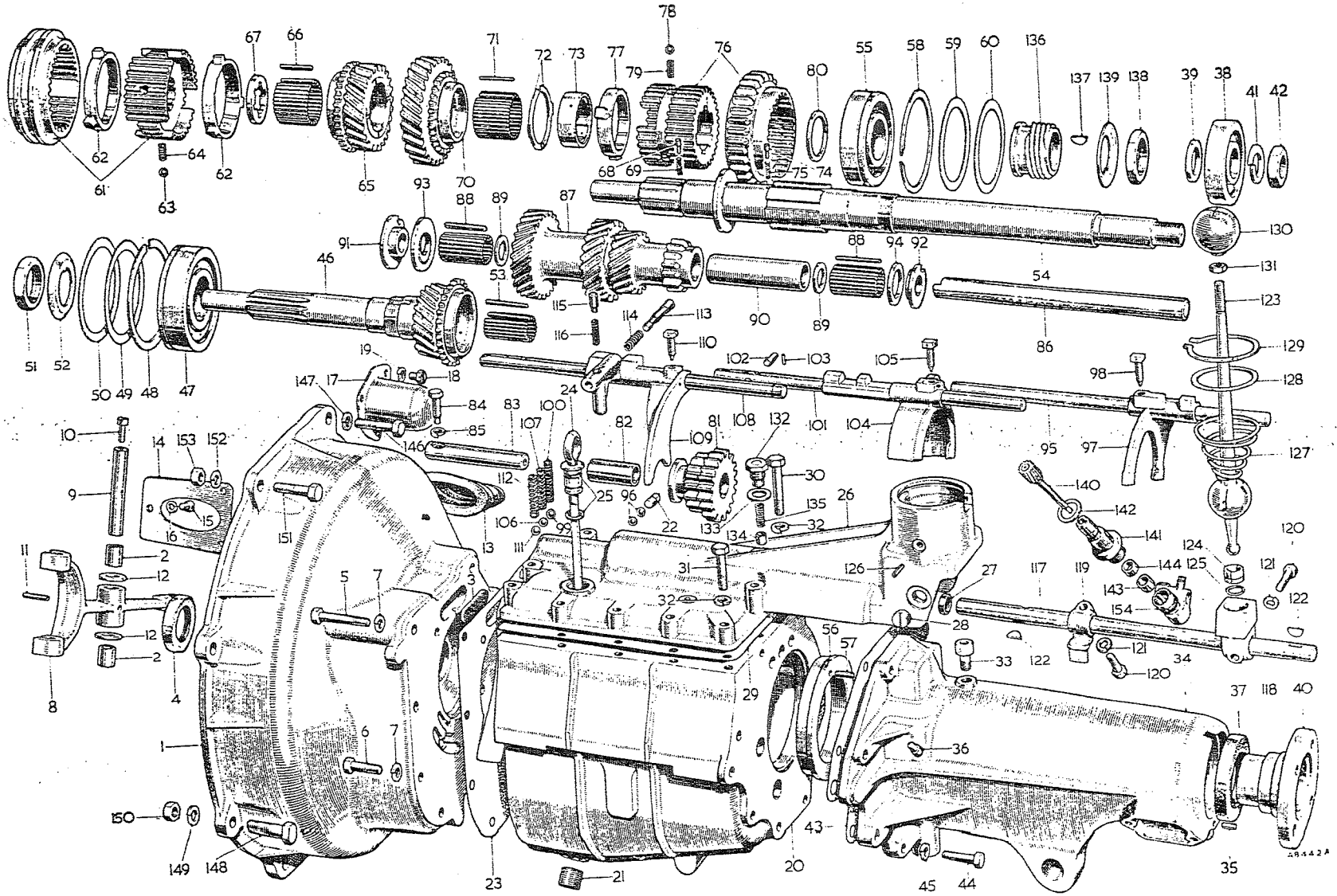

To face page F.9

Item No.	DESCRIPTION	Commencing (E) 29E-H2246 Part Number	Illus. No.	Quantity	MODIFICATIONS New Part Number	MODIFICATIONS Change Point	REMARKS
	Gearbox—*continued*						
1	Lever—selector	AEC3636	119	1			
2	Screw—selector lever and change speed lever socket	HNS0508	120	2			
3	Bolt—selector lever and change speed lever socket			2	AEC3689	Fin. (E) 29E-H5517 Com. (E) 29E-H5518	Use AEC3689 for this application
4	Washer—spring	LWN205	121	2			
5	Key—selector lever and change speed lever socket	WKN404	122	2			
6	Lever—change speed	AEC3658	123	1			
7	**Bush—lever**	**AEC3520**	124	1 pr.			
8	Circlip—bush	1G3709	125	1			
9	Rollpin	AEA558	126	2			
10	Spring—ball end retaining	AEC3671	127	1			
11	Washer—spring	AEC3659	128	1			
12	Circlip	1H3087	129	1			
13	Knob—change speed lever	1B3736	130	1			
14	Locknut—knob	54K1723	131	1			
15	Plug—plunger retaining	AEG3113	132	1			
16	Washer—plug	AEG3122	133	1			
17	Plunger	AEG3124	134	1			
18	Spring—plunger	AEG3123	135	1			
19	Gear—speedometer	AEC3418	136	1			
20	Key—gear	WKN305	137	1			
21	Locknut—gear	AEB3162	138	1			
22	Washer—lock—gear	AEB3163	139	1			
23	Pinion—speedometer	AEC3419	140	1			
24	Bearing—pinion	AEC3198	141	1			
25	Washer—bearing	2K7500	142	1			
26	Collar—pinion distance	AEB3202	143	1			
27	Seal—pinion oil	2A3254	144	1			
28	Bolt—clutch housing to rear plate—1½" (3·81 cm.)	HBZ0612	146	1			
29	Washer—spring—bolt	LWZ206	147	1			
30	Bolt—clutch housing to rear plate—1⅜" (3·50 cm.)	HBZ0611	148	4			
31	Washer—spring—bolt	LWZ206	149	4			
32	Nut—bolt	FNZ106	150	4			
33	Dowel bolt—clutch housing to rear plate	AEC3487	151	2			
34	Washer—spring—dowel bolt	LWZ206	152	2			
35	Nut—dowel bolt	FNZ106	153	2			
36	Adaptor box—speedometer drive	1H3131	154	1			

GEARBOX WITH OVERDRIVE

(Optional Extra)

Item No.	DESCRIPTION	Commencing (E) 29D-H101 Part Number	Illus. No.	Quantity	MODIFICATIONS New Part Number	MODIFICATIONS Change Point	REMARKS
1	**Gearbox assembly**	**AEC3524**		1			
2	**Housing—clutch**	**AEC3534**	1	1			
3	Bush—fork and lever shaft	AEC3102	2	2			
4	Pad—buffer	AEC3298	3	1			
5	Seal—oil	1B3719	132	1	10K7089		1B3719 not available; use 10K7089
6	Bolt—housing to gearbox—2¼" (5·7 cm.)	HBN0518	4	1			Part No. change; was HBN0509
7	Bolt—housing to gearbox—1⅛" (2·85 cm.)	HNS0509	5	7			
8	Washer—spring—bolt	LWN205	6	8			
9	**Fork and shaft assembly—clutch withdrawal**	**AEC3088**		1			
10	Fork and lever—clutch	AEC3324	7	1			
11	Shaft—fork and lever	AEC3104	8	1			
12	Screw—shaft blanking	AEC3221	9	1			
13	Pin—taper—shaft to fork	TPS0610	10	1			
14	Washer—thrust—fork and shaft	AEC3105	11	2			
15	Seal—fork and shaft	AEC3106	12	1			
16	Plate—seal retaining	AEC3168	13	1			
17	Screw—retaining plate	53K1435	14	3			
18	Washer—spring—screw	LWN204	15	3			
19	Cover—starter end	1B3364	16	1			
20	Screw—cover to housing	AEC3207	17	3			
21	Washer—spring—screw	LWN204	18	3		Fin. (E) 29E-H2245	
22	**Case—gearbox**	**AEC3513**	19	1			
23	Dowel—side cover	1K1754	20	2			
24	Plug—oil drain	6K499	21	1			
25	Plug—interlock ball hole	AEC479	22	1			
26	Plug—taper	AEC3455	133	1			
27	Joint—case to clutch housing	AEC3195	23	1			
28	**Indicator—oil level**	**AEC3109**	24	1			
29	Washer—large	2K9799	25	1			
30	Washer—small	6K9829	26	1			
31	Washer (felt)	1G3804	27	1			
32	Cover—gearbox side	AEC3323	28	1			
33	Plug—side cover	8G500	29	1			
34	Washer—plug	6K432	30	1			
35	Stud—change speed lever cover	53K462	31	3			
36	Washer—spring—stud	LWZ204	32	3			
37	Nut—stud	FNZ104	33	3			
38	Joint—cover to gearbox	AEC3176	34	1			
39	Bolt—cover to gearbox—2¾" (6·98 cm.)	HBN0522	35	1			
40	Bolt—cover to gearbox—1½" (3·81 cm.)	HBN0512	36	12			
41	Washer—spring—bolt	LWN205	37	13			

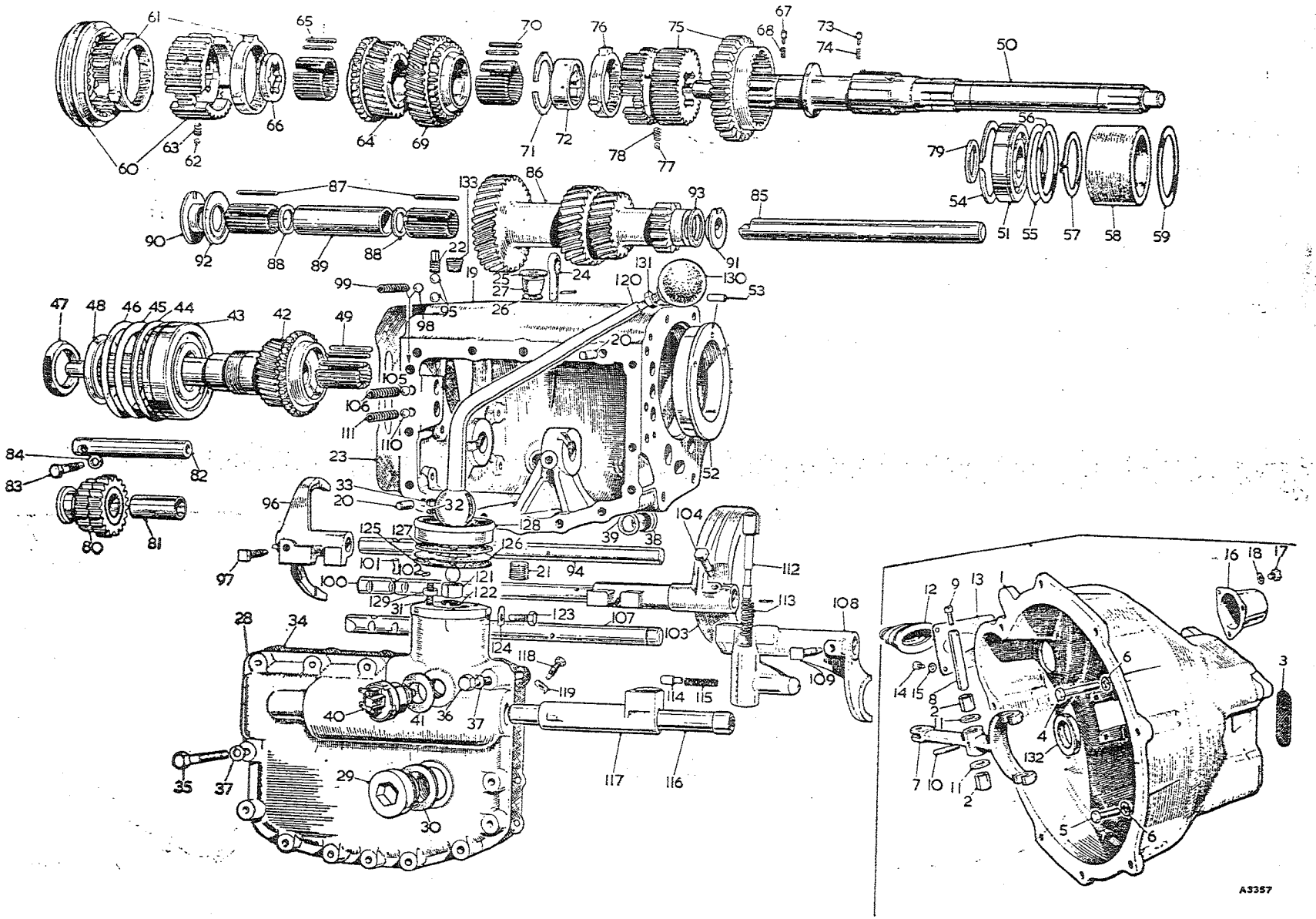

To face page F.10

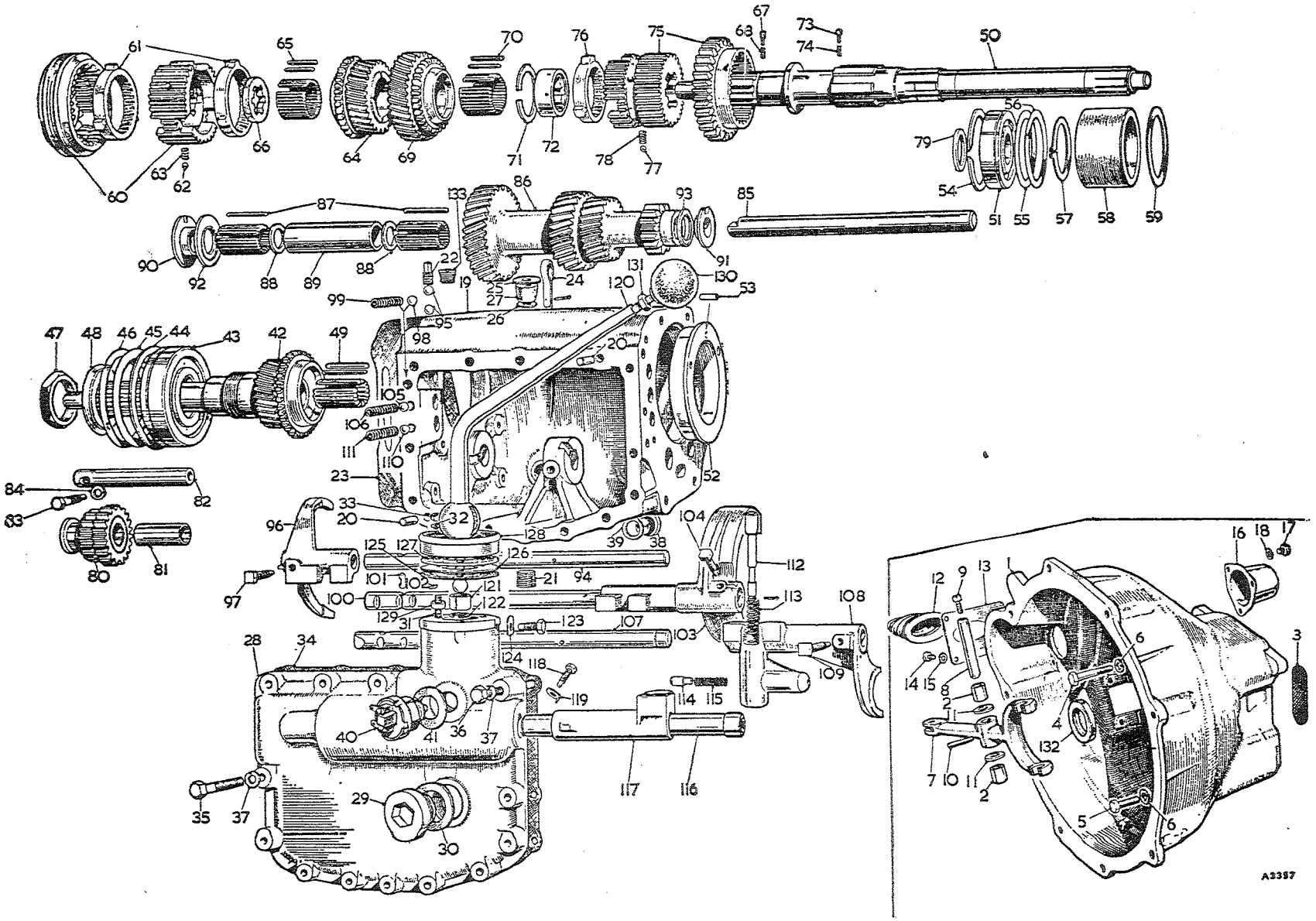

To face page F.11

Item No.	DESCRIPTION	Commencing (E) 29D-H101 Part Number	Illus. No.	Quantity	MODIFICATIONS New Part Number	MODIFICATIONS Change Point	REMARKS
	Gearbox with Overdrive—*continued*						
1	Cap—control shaft boss (in gearbox casing)	8G500	38	2			
2	Washer—cap	6K432	39	2		Fin. (E) 29E-H2245	
3	Switch—overdrive	AEJ20	40	1			
4	Joint—switch	2K7914	41	1			
5	Gear—drive	AEC3358	42	1	AEC3472	Com. (E) 29D-H10897 Fin. (E) 29E-H2245	
6	Bearing—drive gear	6K777	43	1			
7	Circlip—bearing	6K780	44	1			
8	Plate—bearing	AEC3184	45	1			
9	Plate—spring—bearing	AEC3183	46	1		Fin. (E) 29E-H2245	
10	Nut—bearing	AEB3124	47	1			
11	Washer—lock—nut	AEC3185	48	1			
12	Roller—needle—drive gear	AEC3186	49	18			
13	Main shaft	AEC3362	50	1	AEC3486	Com. (E) 29D-H10544 Fin. (E) 29E-H2245	
14	Bearing—mainshaft	6K681	51	1			
15	**Housing—bearing**	**AEC3533**	**52**	**1**			
16	Peg—locating	AEC3112	53	1			
17	Circlip—bearing	1K3055	54	1		Fin. (E) 29E-H2245	
18	Plate—bearing	AEB3105	55	1			
19	Plate—spring—bearing	AEC3178	56	1			
20	Circlip—mainshaft	CCN120	57	1			
21	Distance piece—circlip to bearing	1B3721	58	1		Fin. (E) 29D-H10543	
22	Collar—bearing—abutment—·187″ (4·749 mm.) thick			A/R	AEC3484		
23	Collar—bearing—abutment—·190″ (4·826 mm.) thick			A/R	AEC348403	Com. (E) 29D-H10544 Fin. (E) 29E-H2245	
24	Collar—bearing—abutment—·193″ (4·902 mm.) thick			A/R	AEC348406		
25	Ring—abutment collar retaining			1	AEC3485		
26	Shim						
27	Hub with striking dog—sliding—top and third	1B3655	59	A/R		Fin. (E) 29E-H2245	
28	Interceptor—sliding hub	AEC3072	60	1			
		AEB3214	61	2	AEC3481	Com. (E) 29D-H13939 Fin. (E) 29E-H2245	AEB3214 not available; use AEC3481
29	Ball—sliding hub	BLS110	62	3		Fin. (E) 29E-H2245	
30	Spring—ball	AEC3208	63	3			
31	Gear—third speed	AEC3355	64	1	AEC3468	Com. (E) 29D-H10897 Fin. (E) 29E-H2245	
32	Roller—gear	AEC3180	65	32			
33	Plate—gear locking	AEC3193	66	1		Fin. (E) 29E-H2245	
34	Plunger—gear	AEC3181	67	1			
35	Spring—plunger	AEC3182	68	1			

Item No.	DESCRIPTION	Commencing (E) 29D-H101 Part Number	Illus. No.	Quantity	MODIFICATIONS New Part Number	MODIFICATIONS Change Point	REMARKS
	Gearbox with Overdrive—*continued*						
1	Gear—second speed	AEC3357	69	1	AEC3469	Com. (E) 29D-H10897 Fin. (E) 29E-H2245	
2	Roller—gear	AEC3180	70	33			
3	Washer—gear	AEB3111	71	2			
4	Plate—gear locking	AEB3112	72	1		Fin. (E) 29E-H2245	
5	Plunger—gear	AEC3181	73	1			
6	Spring—plunger	AEC3182	74	1			
7	Gear with first and second sliding hub—first speed	AEC3507	75	1	AEC3539 AEC3566	Com. (E) 29D-H10897 Com. (C) 1230 Fin. (E) 29E-H2245	AEC3507 not available; use AEC3539
8	Interceptor—sliding hub	AEC3211	76	1	AEC3482	Com. (E) 29D-H13939 Fin. (E) 29E-H2245	AEC3211 not available; use AEC3482
9	Ball—sliding hub	BLS110	77	3			
10	Spring—ball	AEC3208	78	3		Fin. (E) 29E-H2245	
11	Distance collar—mainshaft	AEC3115	79	1			
12	**Gear—reverse**	**AEC3525**	**80**	**1**	**AEC3540** **AEC3565**	**Com. (E) 29D-H10897** **Com. (G) 12320** **Fin. (E) 29E-H2245**	
13	Bush—gear	AEC3119	81	1			
14	Shaft—reverse gear	AEC3340	82	1			
15	Screw—shaft retaining	AEC3121	83	1		Fin. (E) 29E-H2245	
16	Washer—spring—screw	LWN205	84	1			
17	Layshaft	AEB3203	85	1			
18	Gear unit—layshaft	AEC3359	86	1		Fin. (E) 29E-H10896	
19	Gear unit with bushes—layshaft			1	AEC3471	Com. (E) 29D-H10897 Fin. (E) 29D-H14565	Not available; use AEC3616 with 46 off AEB3212, 2 off AEB3204 and 1 off AEC3393
20	Gear unit—layshaft			1	AEC3616 AEC3649	Com. (E) 29D-H14566 Com. (G) 12320 Fin. (E) 29E-H2245	
21	Roller—gear unit	AEB3212	87	46		Fin. (E) 29D-H10896 Com. (E) 29D-H14566 Fin. (E) 29E-H2245	
22	Washer—roller	AEB3204	88	2			
23	Spacer—roller	AEC3393	89	1			
24	Plate—gear unit thrust—front	AEC3115	90	1			
25	Plate—gear unit thrust—rear	AEC3116	91	1			
26	Washer—gear unit thrust—front	AEB3209	92	1			
27	Washer—gear unit thrust—rear	AEC3350	93	1	AEC3681		AEC 3350 not available; use AEC3681

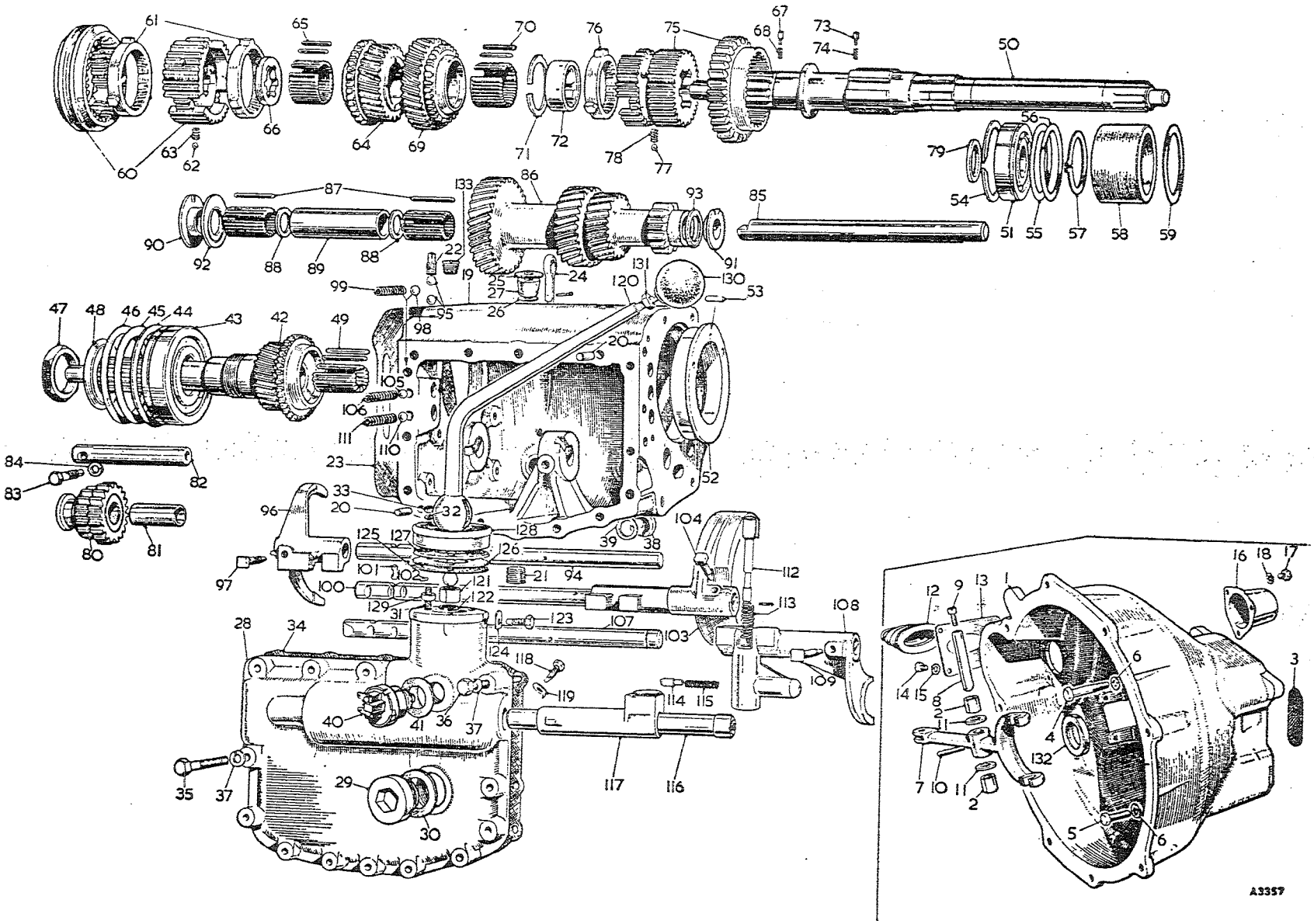

To face page F.12

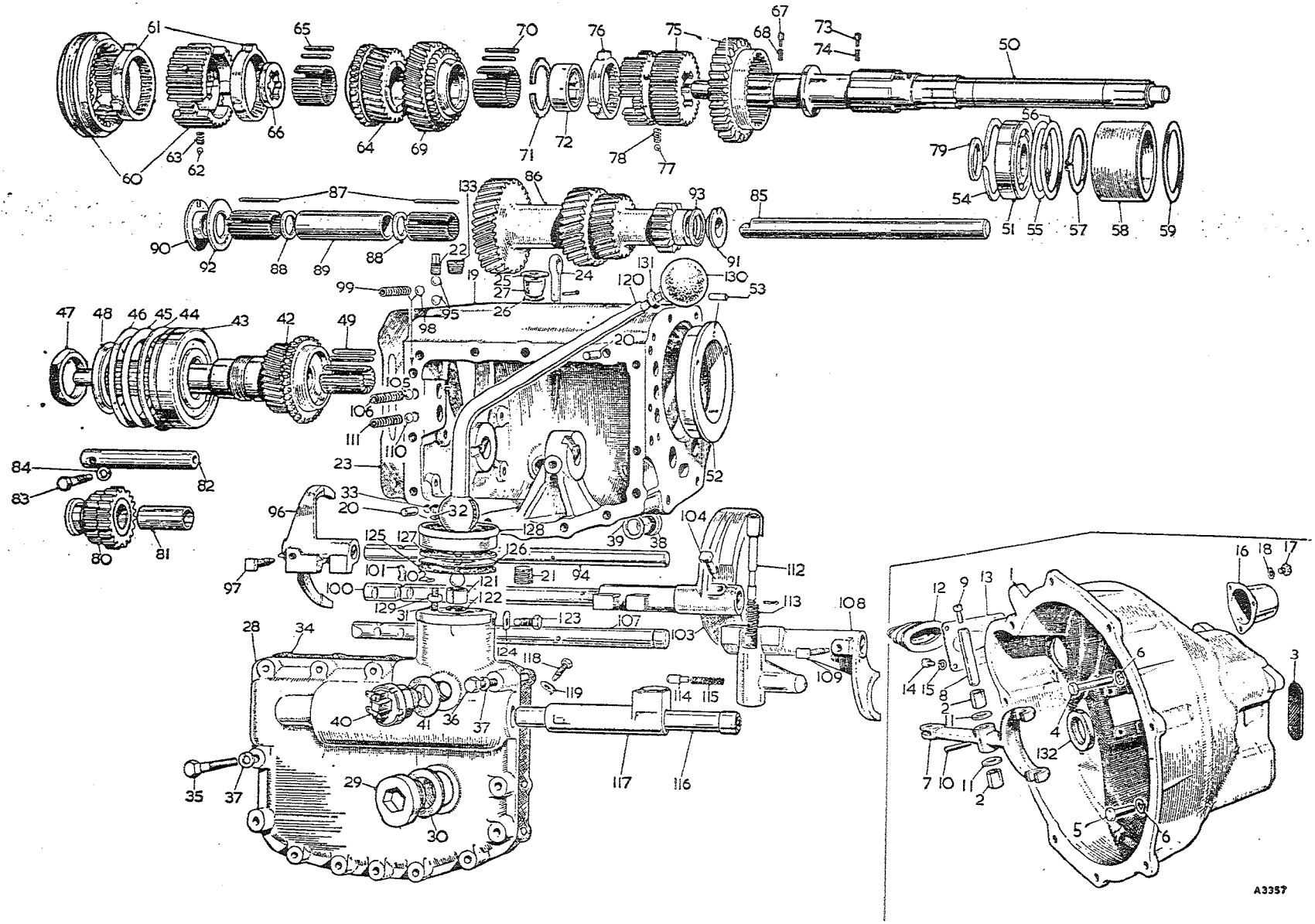

To face page F.13

Item No.	DESCRIPTION	Commencing (E) 29D-H101 Part Number	Illus. No.	Quantity	MODIFICATIONS New Part Number	MODIFICATIONS Change Point	REMARKS
	Gear Box with Overdrive—*continued*						
1	Shaft—top and third shifter	AEC3342	94	1			
2	Ball—shaft interlocking	BLS110	95	2			
3	Fork—striking—top and third	1B5107	96	1			
4	Screw—fork to shaft	AEB3130	97	1			
5	Ball—shifter shaft	BLS110	98	1			
6	Spring—ball	AEC3189	99	1			
7	**Shaft—first and second shifter**	**AEC3504**	**100**	1			
8	Pin—shaft interlocking	AEC3187	101	1			
9	Rivet—interlocking pin	AEC3188	102	1			
10	Fork—striking—first and second	1B3708	103	1			
11	Screw—fork to shaft	AEB3130	104	1			
12	Ball—shifter shaft	BLS110	105	1			
13	Spring—ball	AEC3189	106	1			
14	Shaft—reverse shifter	AEC3343	107	1		Fin. (E) 29E-H2245	
15	Fork—striking—reverse	AEC3322	108	1			
16	Screw—fork to shaft	AEB3130	109	1			
17	Ball—shifter shaft	BLS110	110	1			
18	Spring—ball	AEC3189	111	1			
19	Plunger—reverse selector	1B3710	112	1			
20	Spring—plunger	3F3198	113	1			
21	Plunger—detent	1B3836	114	1			
22	Spring—plunger	2K4909	115	1	22A75		2K4909 not available; use 22A75
23	Shaft—control	1B3713	116	1			
24	Lever—control	1B3706	117	1			
25	Screw—shaft locking	1G3581	118	1			
26	Washer—lock—screw	1B3363	119	1			
27	Lever—change speed	1B3760	120	1	AEC3480	Com (E) 29D-H20598 Fin. (E) 29E-H2245	
28	**Bush—lever**	**AEC3520**	**121**	**1 pr.**			
29	Circlip—bush	1G3709	122	1			
30	Screw—lever locating	2F3166	123	1			
31	Washer—tab—screw	2F3040	124	1			
32	Washer—sealing—change speed lever	1B3632	125	1			
33	Seat—change speed lever	2F3151	126	1			
34	Pad—change speed lever packing	2F3152	127	1		Fin. (E) 29E-H2245	
35	Cover—change speed lever	2F3154	128	1			
36	Distance piece—cover	1B3634	129	3			
37	Knob—change speed lever	1B3736	130	1			
38	Nut—lock—knob	54K1723	131	1			

SERVICE PARTS LIST

Item No.	DESCRIPTION	Commencing (E) 29EH2246 Part Number	Illus. No.	Quantity	MODIFICATIONS New Part Number	MODIFICATIONS Change Point	REMARKS
	Gearbox with Overdrive—*continued*	**AEC3554** X		1			
1	**Gearbox assembly**	**AEC3559**	1	1			
2	**Housing—clutch**	AEC3102	2	2			
3	Bush—fork and lever shaft	AEC3298	3	1			1B3719 not available; use 10K7089
4	Pad—buffer	1B3719	4	1	10K7089		
5	Seal—oil	HBN0518	5	1			Part No. change; was HBN0509
6	Bolt—housing to gearbox—2¼" (5·71 cm.)	HNS0509	6	8	USE HZS509		
7	Bolt—housing to gearbox—1⅛" (2·85 cm.)	LWN205	7	9			
8	Washer—spring—bolt	**AEC3088**		1			
9	**Fork and shaft assembly—clutch withdrawal**	AEC3324	8	1			
10	Fork and lever—clutch	AEC3104	9	1			
11	Shaft—fork and lever	AEC3221	10	1			
12	Screw—shaft blanking	TPS0610	11	1			
13	Pin—taper—shaft to fork	AEC3105	12	2			
14	Washer—thrust—fork and shaft	AEC3106	13	1			
15	Seal—fork and shaft	AEC3168	14	1			
16	Plate—seal retaining	53K1435	15	3			
17	Screw—retaining plate	LWN204	16	3			
18	Washer—spring—screw	1B3346	17	1			
19	Cover—starter end	AEC3207	18	3			
20	Screw—cover to housing	LWN204	19	3			
21	Washer—spring—screw	**AEC3547**	20	1			
22	**Case—gearbox**	6K499	21	1			
23	Plug—oil drain	AEC479	22	1			
24	Plug—interlock ball hole	AEC3601	23	1			
25	Joint—case to clutch housing	**AEC3683**	24	1			
26	**Indicator—oil level**	AEC3461	25	2			
27	Grommet (rubber)	AEC3657	26	1			
28	Cover—gearbox top	AEJ51	27	1			
29	Seal—oil—cover	AEC3492	28	1			
30	Joint—cover to gearbox	HBN0515	29	2			
31	Bolt—cover to gearbox—1⅞" (4·76 cm.)	HBN0512	30	10			
32	Bolt—cover to gearbox—1½" (3·81 cm.)	LWN205	31	12			
33	Washer—spring—bolt	AEJ20	32	1			
34	Switch—overdrive	2K7914	33	1			
35	Joint—switch	AEC3472	34	1			
36	Gear—drive	6K777	35	1			
37	Bearing—drive gear	6K780	36	1			
38	Circlip—bearing	AEC3184	37	1			
39	Plate—bearing	AEC3183	38	1			
40	Plate—spring—bearing						

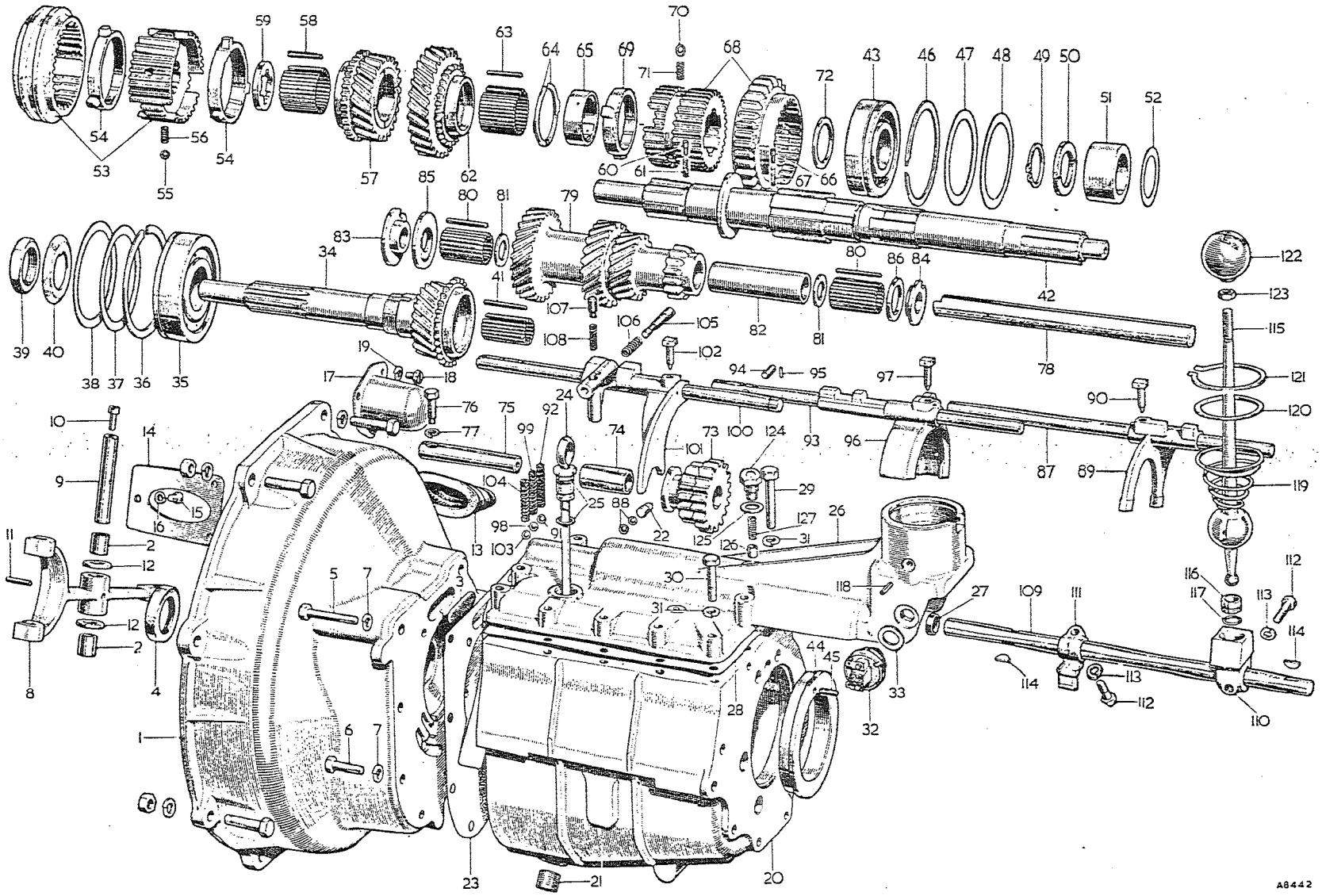

To face page F.14

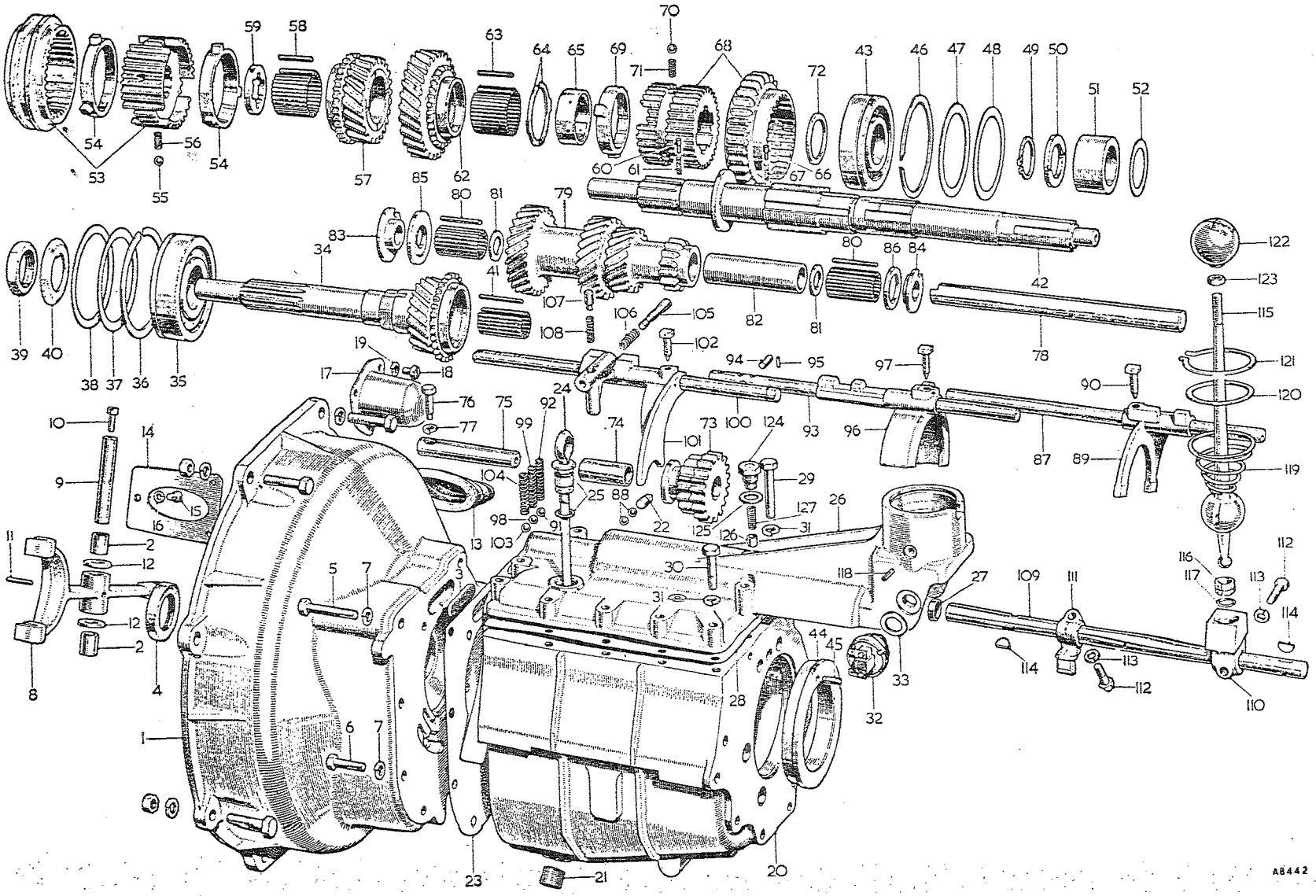

To face page F.15

Item No.	DESCRIPTION	Commencing (E) 29E-H2246 Part Number	Illus. No.	Quantity	MODIFICATIONS New Part Number	MODIFICATIONS Change Point	REMARKS
	Gearbox with Overdrive—*continued*						
1	Nut—bearing	AEB3124	39	1			
2	Washer—lock—nut	AEC3185	40	1			
3	Roller—needle—drive gear	AEC3186	41	18			
4	Mainshaft	AEC3486	42	1			
5	Bearing—mainshaft	6K681	43	1			
6	**Housing—bearing**	**AEC3533**	**44**	**1**			
7	Peg—locating	AEC3112	45	1			
8	Circlip—bearing	1K3055	46	1			
9	Plate—bearing	AEB3105	47	1			
10	Plate—spring—bearing	AEC3178	48	1			
11	Circlip—mainshaft	CCN120	49	1			
12	Collar—bearing—abutment—·187″ (4·749 mm.) thick	AEC3484	50	A/R			
13	Collar—bearing—abutment—·190″ (4·826 mm.) thick	AEC348403		A/R			
14	Collar—bearing—abutment—·193″ (4·902 mm.) thick	AEC348406		A/R			
15	Ring—abutment collar retaining	AEC3485	51	1			
16	Shim	1B3655	52	A/R			
17	Hub with striking dog—sliding—top and third	AEC3072	53	1			
18	Interceptor—sliding hub	AEC3481	54	2			
19	Ball—sliding hub	BLS110	55	3			
20	Spring—ball	AEC3208	56	3			
21	Gear—third speed	AEC3468	57	1			
22	Roller—gear	AEC3180	58	32			
23	Plate—locking	AEC3193	59	1			
24	Plunger—gear	AEC3181	60	1			
25	Spring—plunger	AEC3182	61	1			
26	Gear—second speed	AEC3469	62	1			
27	Roller—gear	AEC3180	63	33			
28	Washer—gear	AEB3111	64	2			
29	Plate—locking	AEB3112	65	1			
30	Plunger—gear	AEC3181	66	1			
31	Spring—plunger	AEC3182	67	1			
32	Gear with first and second sliding hub—first speed	AEC3566	68	1	BR 3013		
33	Interceptor—sliding hub	AEC3482	69	1			
34	Ball—sliding hub	BLS110	70	3			
35	Spring—ball	AEC3208	71	3			
36	Distance collar—mainshaft	AEB3115	72	1			
37	**Gear—reverse**	**AEC3565**	**73**	**1**			
38	Bush—gear	AEC3119	74	1			
39	Shaft—gear	AEC3240	75	1			
40	Screw—shaft retaining	AEC3121	76	1			
41	Washer—spring—screw	LWN305	77	1			

Item No.	DESCRIPTION	Commencing (E) 29E-H2246 Part Number	Illus. No.	Quantity	MODIFICATIONS New Part Number	MODIFICATIONS Change Point	REMARKS
	Gearbox with Overdrive—*continued*	AEB3203	78	1			
1	Layshaft	AEC3649	79	1			
2	Gear unit—layshaft	AEB3212	80	46			
3	Roller—gear unit	AEB3204	81	2			
4	Washer—roller	AEC3393	82	1			
5	Spacer—roller	AEC3115	83	1			
6	Plate—gear unit thrust—front	AEC3116	84	1			
7	Plate—gear unit thrust—rear	AEB3209	85	1			
8	Washer—gear unit thrust—front	AEC3350	86	1	AEC3681		AEC3350 not available; use AEC3681
9	Washer—gear unit thrust—rear						
		AEC3342	87	1			
10	Shaft—top and third shifter	BLS110	88	2			
11	Ball—shaft interlocking	AEC3625	89	1			
12	Fork—striking—top and third	AEB3130	90	1			
13	Screw—fork to shaft	BLS110	91	1			
14	Ball—shifter shaft	AEC3189	92	1			
15	Spring—ball	**AEC3557**	**93**	**1**			
16	**Shaft—first and second shifter**	AEC3187	94	1			
17	Pin—shaft interlocking	AEC3188	95	1			
18	Rivet—interlocking pin	AEC3624	96	1			
19	Fork—striking—first and second	AEB3130	97	1			
20	Screw—fork to shaft	BLS110	98	1			
21	Ball—shifter shaft	AEC3189	99	1			
22	Spring—ball	AEC3342	100	1			
23	Shaft—reverse shifter	AEC3626	101	1			
24	Fork—striking—reverse	AEB3130	102	1			
25	Screw—fork to shaft	BLS110	103	1			
26	Ball—shifter shaft	AEC3189	104	1			
27	Spring—ball	1B3710	105	1			
28	Plunger—reverse selector	2F3198	106	1			
29	Spring—plunger	1B3836	107	1			
30	Plunger—detent	22A75	108	1			
31	Spring—detent plunger	AEC3656	109	1			
32	Shaft—remote control	AEC3654	110	1			
33	Socket—change speed lever	AEC3636	111	1			
34	Lever—selector	HNS0508	112	2		Fin. (E) 29E-H5517	Use AEC3689 for this application
35	Screw—selector lever and change speed lever socket			2	AEC3689	Com. (E) 29E-H5518	
36	Bolt—selector lever and change speed lever socket	LWN205	113	2			
37	Washer—spring—screw						

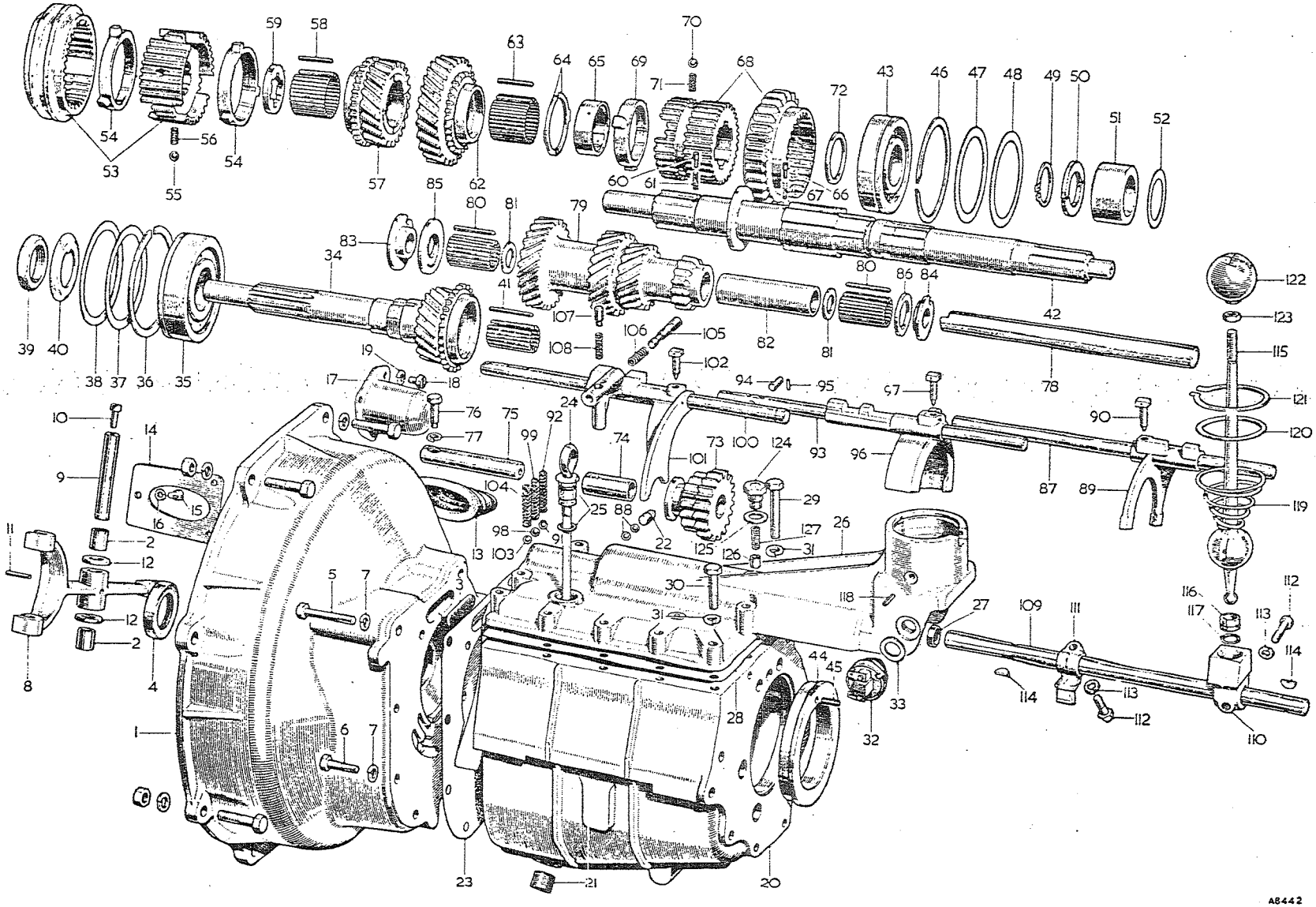

To face page F.16

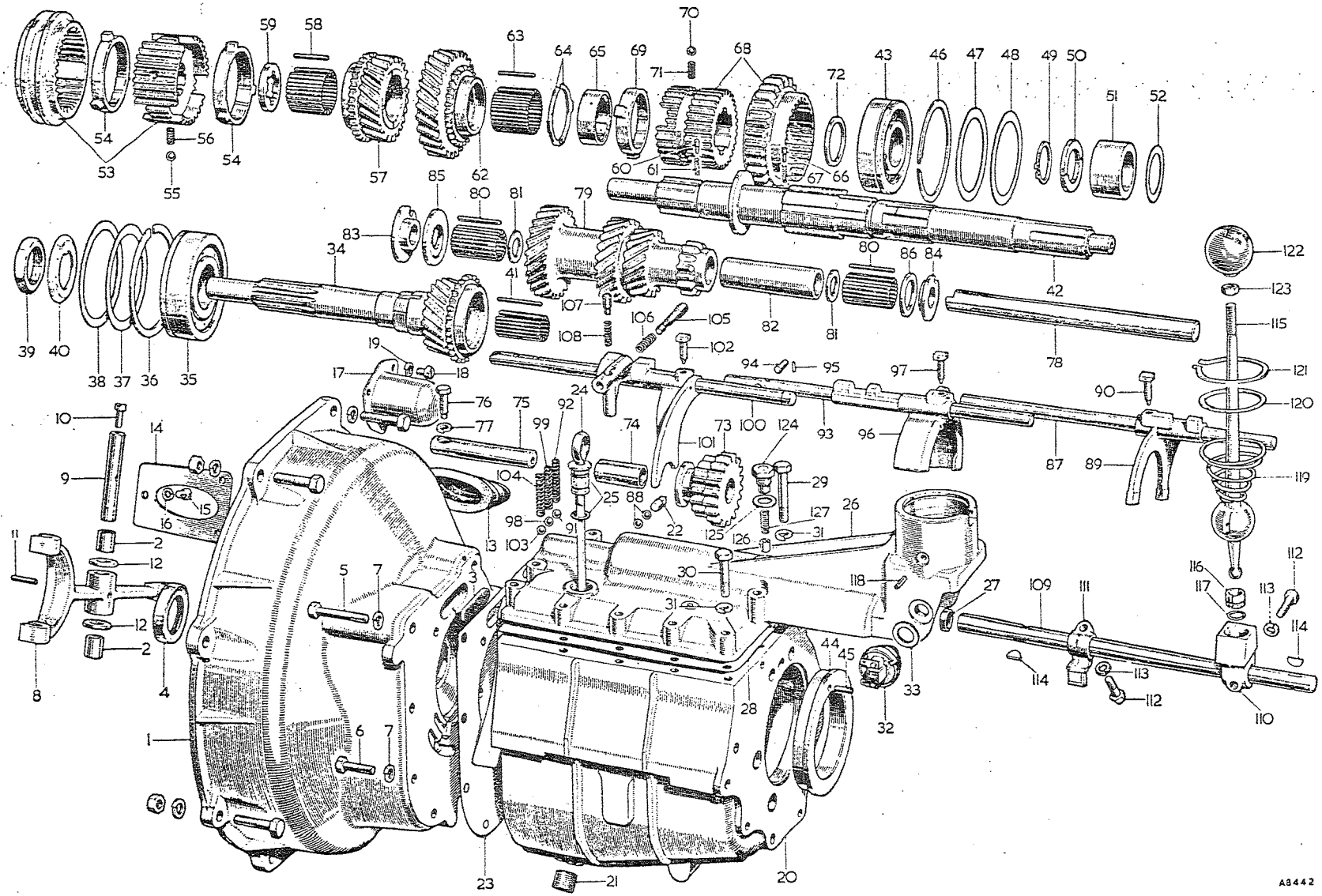

To face page F.17

Item No.	DESCRIPTION	Commencing (E) 29D-H101 Part Number	Illus. No.	Quantity	MODIFICATIONS New Part Number	MODIFICATIONS Change Point	REMARKS
	Gearbox with Overdrive—*continued*						
1	Joint—overdrive unit to gearbox	AEC3142	1	1	AEC3605	Com. (E) 29E-H2246	
2	Stud—overdrive unit to gearbox	51K505	2	8			
3	Washer—spring—stud	LWN205	3	8			
4	Nut—stud	FNN505	4	8			
5	**Overdrive unit assembly**	**AEC3363**		1	**AEC3661**	**Com. (E) 29E-H2246**	
6	Plate—adaptor	17H5860	5	1	AEC3623		
7	Joint—adaptor plate to front casing	7H5825	7	1			
8	Nut—plate stud to casing	FNZ105	8	2			
9	Washer—spring—stud	LWZ205	9	2			
10	**Casing—front**	**17H5862**	**10**	**1**			
11	Plug—welch	7H5896	11	1			
12	Shaft—valve operating	17H5875	12	1			
13	Lever—shaft	7H5822	13	1			
14	Pin—taper—lever to shaft	TPS0405	14	1			
15	Cam—valve operating	7H5827	15	1			
16	Pin—taper—cam	TPS0405	16	1			
17	Seal—oil—shaft	17H5815	17	1			
18	Stud—solenoid bracket	7H5832	18	1	FHS0511		7H5832 not available; use FHS0511
19	Stud—solenoid bracket	17H5856	79	1			
20	Stud—adaptor plate—long	7H5830	19	3	FHS0510		7H5830 not available; use FHS0510
21	Stud—adaptor plate—short	7H5831	20	1			
22	Stud—front casing to rear casing	7H5833	21	2			
23	Stud—adaptor plate to front casing	7H5829	6	2			
24	Peg—oil pump plunger guide	7H5851	22	1			
25	Nut—front casing to adaptor plate	FNZ205	23	4			
26	Washer—spring—nut	LWZ205	24	4			
27	Breather	17H5825	25	1			FAD 2 3 3 5
28	Bracket—solenoid	17H5866	26	1	WAS 27H2315	Fin. (OD) 22/3087/10259	
29	**Bracket—solenoid**	**27H2315**		1			
30	Dowel	27H2412		1		Com. (OD) 22/3087/10260	
31	Screw—adjusting	27H2413		1			
32	Locknut	27H2414		1			
33	Stop (rubber)	17H5811	27	1			
34	Joint—bracket to casing	7H5852	28	1			
35	Nut—bracket to casing	FNZ105	29	2			
36	Washer—spring—nut	LWZ205	30	2			
37	Screw—bracket to casing	HNS0514	31	2	CAN USE HZS 514		
38	Washer—plain—screw	PWZ105	32	2			
39	Washer—spring—screw	LWZ205	33	2			

Item No.	DESCRIPTION	Commencing (E) 29E-H2246 Part Number	Illus. No.	Quantity	MODIFICATIONS New Part Number	MODIFICATIONS Change Point	REMARKS
	Gearbox with Overdrive—*continued*						
1	Key—selector lever and change speed lever socket	WKN404	114	2			
2	Lever—change speed	AEC3658	115	1			
3	**Bush—lever**	**AEC3520**	**116**	**1 pr.**			
4	Circlip—bush	1G3709	117	1			
5	Rollpin	AEA558	118	2			
6	Spring—ball end retaining	AEC3671	119	1			
7	Washer—spring	AEC3659	120	1			
8	Circlip	1H3087	121	1			
9	Knob—change speed lever	1B3736	122	1			
10	Locknut—knob	54K1723	123	1			
11	Plug—plunger retaining	AEG3113	124	1			
12	Washer—plug	AEG3122	125	1			
13	Plunger	AEG3124	126	1			
14	Spring—plunger	AEG3123	127	1			

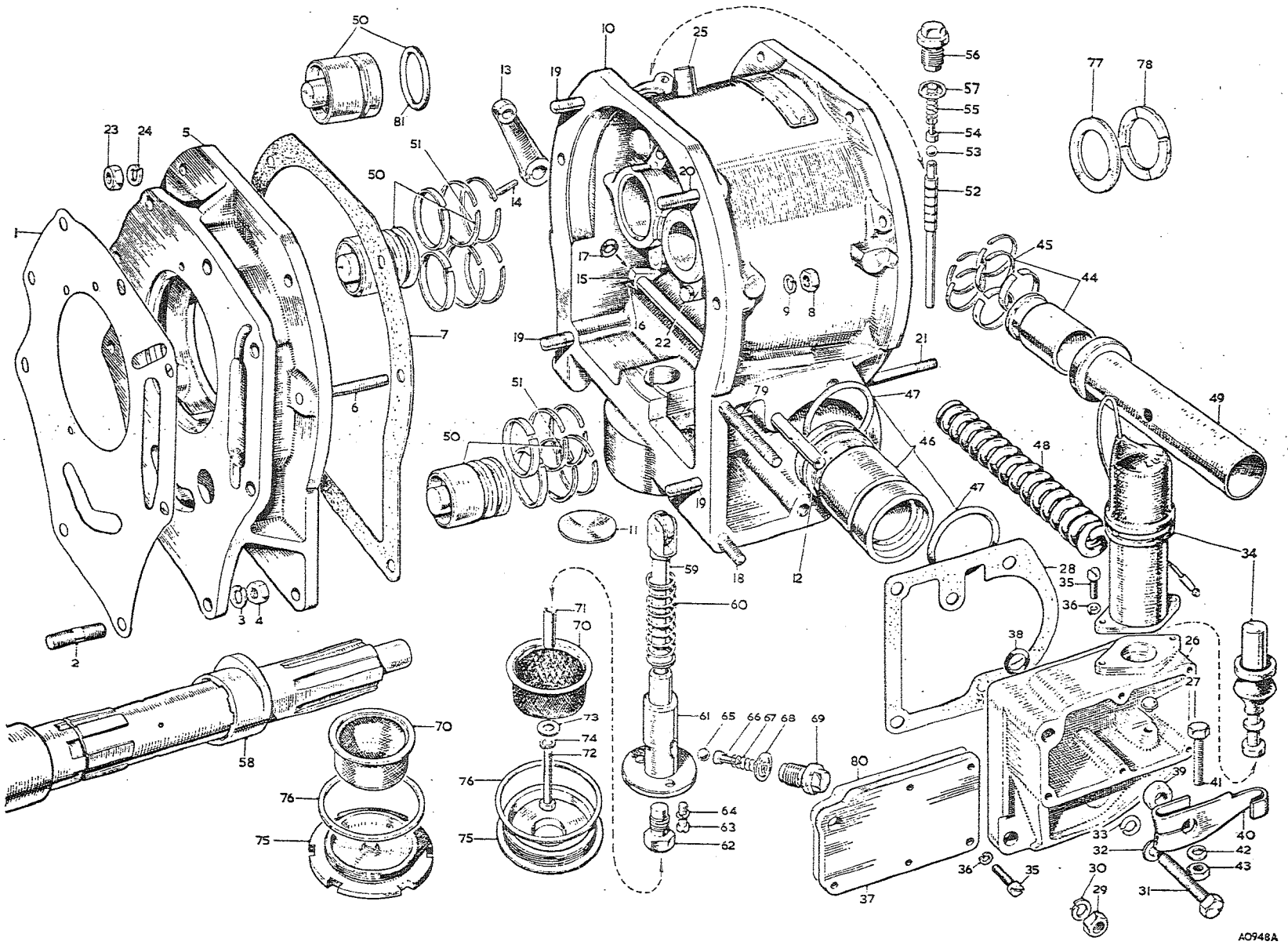

To face page F.18

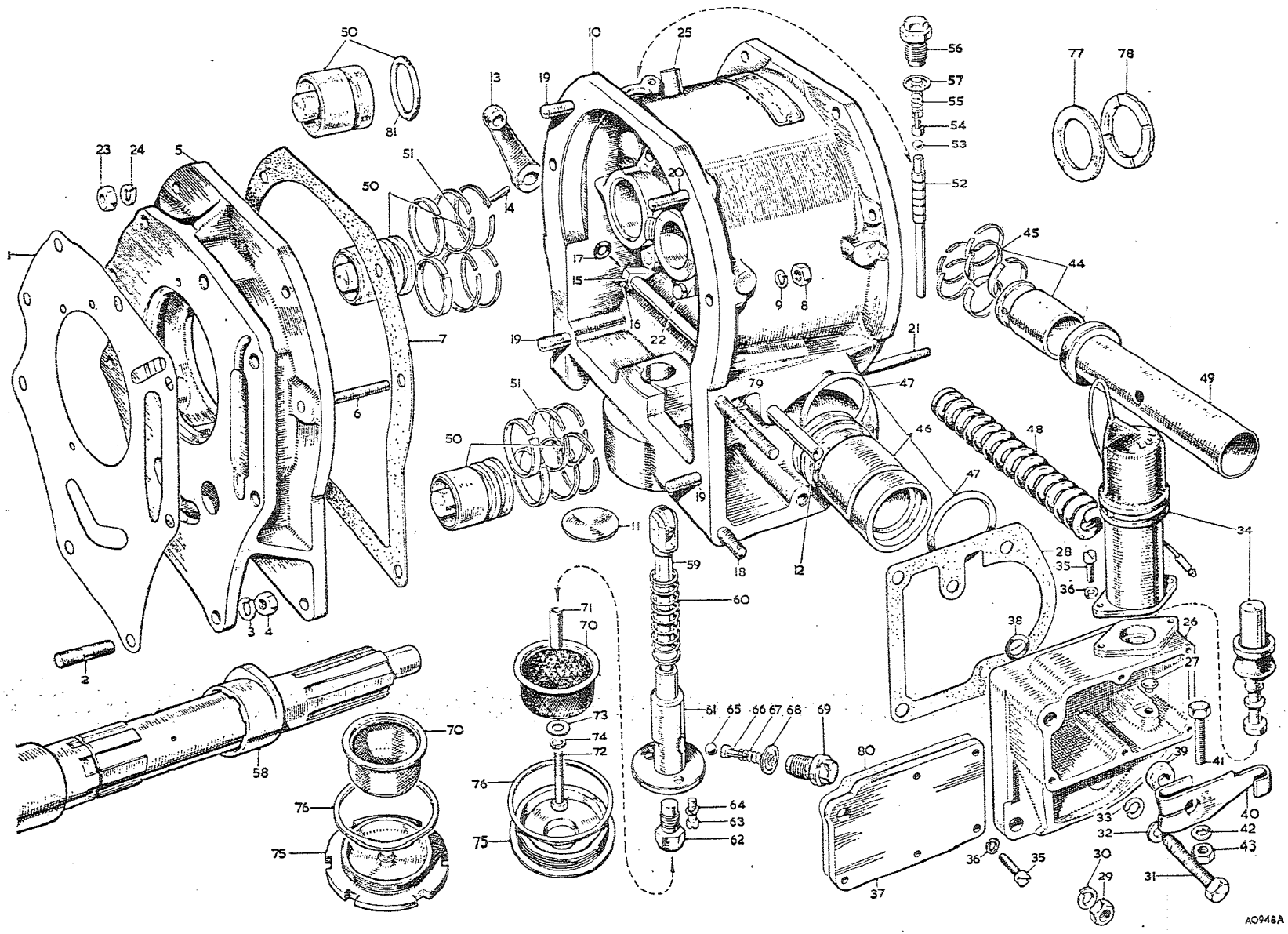

To face page F.19

Item No.	DESCRIPTION	Commencing (E) 29D-H101 Part Number	Illus. No.	Quantity	MODIFICATIONS New Part Number	MODIFICATIONS Change Point	REMARKS
	Gearbox with Overdrive—*continued*						
1	Solenoid	13H137	34	1	AEJ42	Com. (E) 29E-H2246	
2	Joint—solenoid to bracket	7H8196		1			
3	Screw—solenoid to bracket	PMZ0308	35	2			
4	Washer—spring—screw	LWZ203	36	2			
5	Plate—solenoid to bracket cover	17H5857	37	1			
6	Joint—plate to bracket	17H5858	80	1			
7	Screw—plate to bracket	53K126		5			Part No. change; was 7H8309
8	Washer—spring—screw	LWZ203		5			
9	Seal—oil—valve operating shaft	17H5815	38	1			
10	Distance collar—valve operating shaft	17H5809	39	1			
11	Lever—solenoid	17H5808	40	1			
12	Screw—lever to spindle	HZS0406	41	1			
13	Washer—spring—screw	LWZ204	42	1			
14	Nut—screw	FNZ104	43	1			
15	**Piston assembly—accumulator**	**17H5847**	**44**	1			
16	Ring—piston	7H5849	45	2 sets			
17	**Housing assembly—accumulator**	**17H5848**	**46**	1			
18	Ring (rubber)	7H5846	47	2/1			Quantity reduced at (OD) 22/3009/011000
19	Spring—accumulator pressure	17H5833	48	1			
20	Tube—spring	7H5845	49	1			
21	**Piston assembly—operating**	**17H5849**	**50**	2	**17H5873**	**Com. (OD) 22/3009/608** Fin. (OD) 22/3009/607	
22	Ring—piston	7H5860	51	4 sets		Com. (OD) 22/3009/608	
23	Ring—piston		81	2	17H5874		
24	Valve—operating	17H5827	52	1			
25	Ball—valve	BLS110	53	1			
26	Plunger—ball	7H5837	54	1			
27	Spring—plunger	7H5836	55	1			
28	Plug—screwed—valve	7H5820	56	1			
29	Washer—plug	7H5898	57	1			
30	Cam—oil pump	1B3650	58	1			
31	Plunger assembly—oil pump	7H5838	59	1	17H5977		7H5838 not available; use 17H5977
32	Spring—plunger	7H5839	60	1			
33	Body—oil pump	7H5840	61	1			
34	Plug—screwed—body	7H5841	62	1			
35	Screw—body to front casing	PMZ0308	63	2			
36	Washer—spring—screw	LWN203	64	2			

Item No.	DESCRIPTION	Commencing (E) 29D-H101 Part Number	Illus. No.	Quantity	MODIFICATIONS New Part Number	MODIFICATIONS Change Point	REMARKS
	Gearbox with Overdrive—*continued*						
1	Ball—valve	BLS108	65	1			
2	Plunger—ball	7H5837	66	1			
3	Spring—plunger	7H5836	67	1			
4	Washer—valve plug (copper)	7H5898	68	1			
5	Plug—screwed—valve	7H5820	69	1			
6	Strainer—oil pump	7H5842	70	1	17H5878	Com. (OD) 22/3009/8745	
7	Distance tube—strainer	7H5843	71	1			
8	Bolt—strainer	7H5844	72	1			
9	Washer—plain—bolt	PWN103	73	1		Fin. (OD) 22/3009/607	
10	Washer—spring—bolt	LWN203	74	1			
11	Plug—front casing—oil drain	7H5856	75	1	17H5872	Com. (OD) 22/3009/608	17H5872 not available; use 17H5879
					17H5879	Com. (OD) 22/3009/8745	
12	Magnet—plug			1	17H5877	Com. (OD) 22/3009/8745 W SE 17H 8151	PAQ 2583
13	Washer—plug	7H5857	76	1			
14	Washer—steel—sunwheel adjusting—front—·113 to ·114″ (2·87 to 2·89 mm.)	7H5872A W SE	77	A/R	17H 5872		PAQ 2583
15	Washer—steel—sunwheel adjusting—front—·107 to ·108″ (2·71 to 2·74 mm.)	7H5872B		A/R			
16	Washer—steel—sunwheel adjusting—front—·101 to ·102″ (2·56 to 2·59 mm.)	7H5872C		A/R			
17	Washer—steel—sunwheel adjusting—front—·095 to ·096″ (2·40 to 2·43 mm.)	7H5872D		A/R			
18	Washer—steel—sunwheel adjusting—front—·089 to ·090″ (2·26 to 2·28 mm.)	7H5872E		A/R			
19	Washer—steel—sunwheel adjusting—front—·083 to ·084″ (2·10 to 2·13 mm.)	7H5872F		A/R			
20	Washer—steel—sunwheel adjusting—front—·077 to ·078″ (1·95 to 1·98 mm.)	7H5872G		A/R			
21	Washer—phosphor-bronze—sunwheel thrust—front	7H5873	78	1			

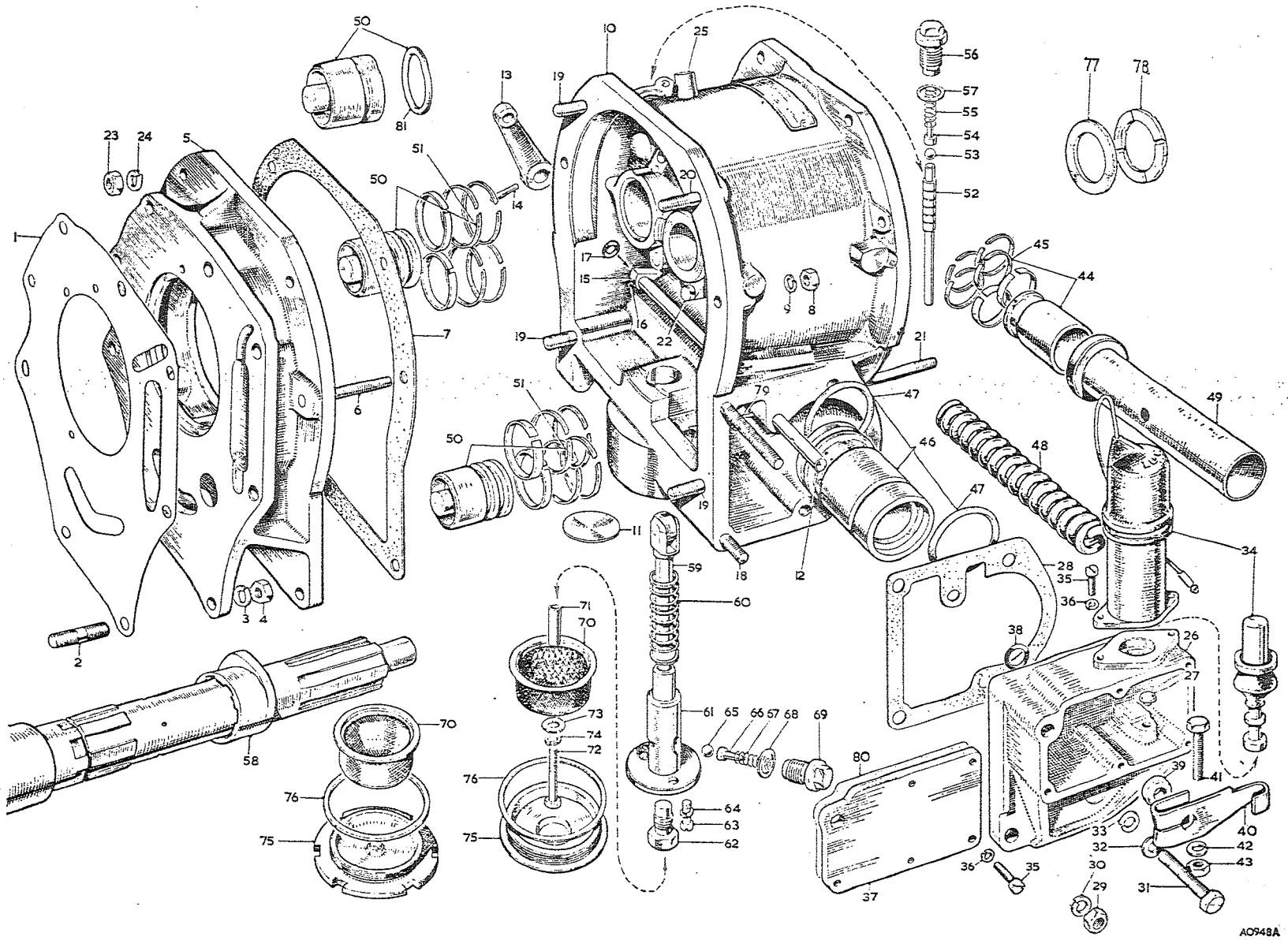

To face page F.20

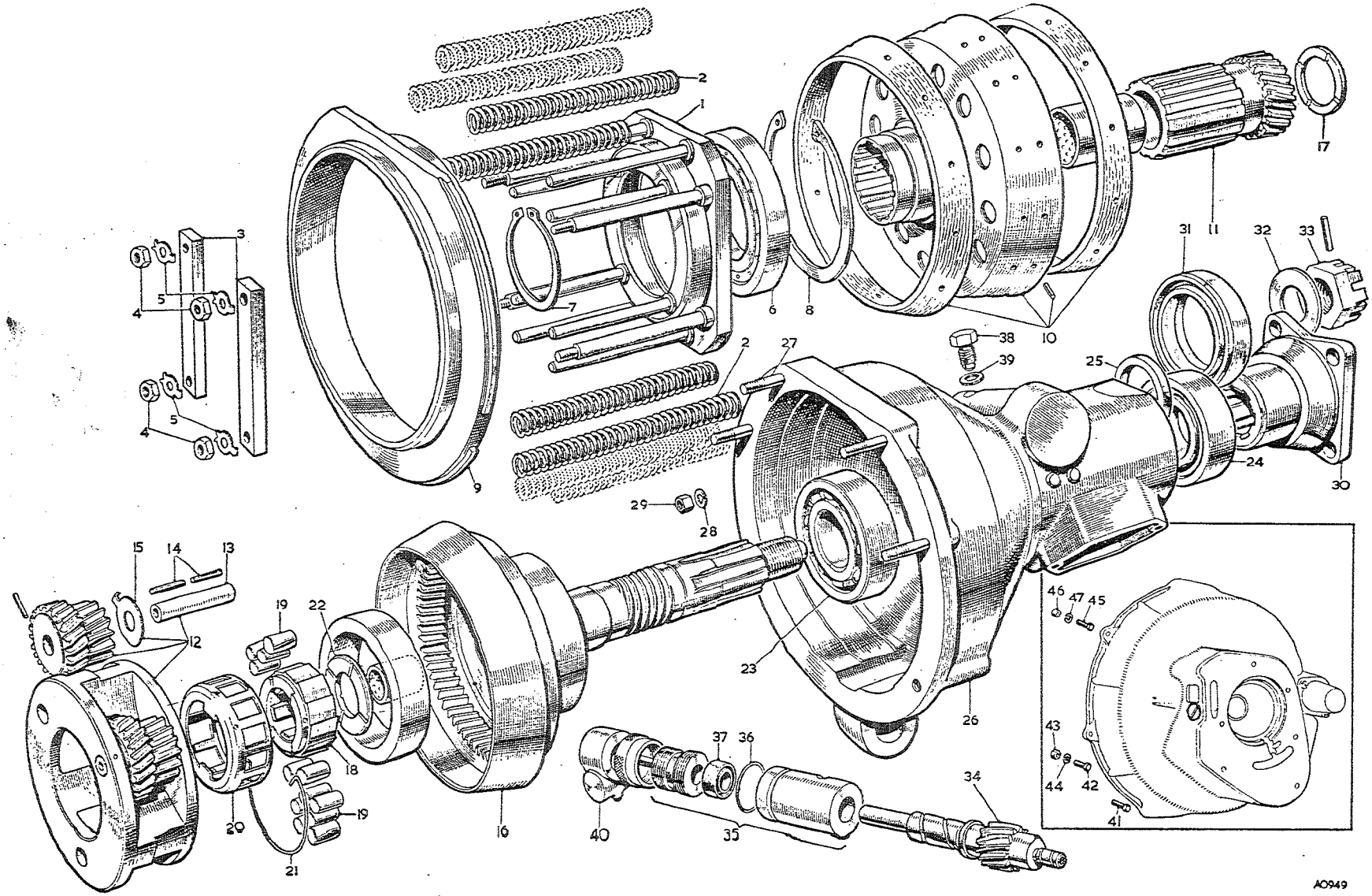

To face page F.21

Item No.	DESCRIPTION	Commencing (E) 29D-H101 Part Number	Illus. No.	Quantity	MODIFICATIONS New Part Number	MODIFICATIONS Change Point	REMARKS
	Gearbox with Overdrive—*continued*						
1	Ring assembly—clutch thrust	7H5861	1	1			
2	Spring—clutch	17H5804	2	1 set			
3	Bridge piece—thrust ring	7H5862	3	2			
4	Nut—thrust ring	FNN104	4	4			
5	Washer—tab—nut	7H5863	5	4			
6	Bearing—thrust ring	7H5866	6	1			
7	Circlip—bearing—small	7H5867	7	1			
8	Circlip—bearing—large	7H5868	8	1			
9	Ring—clutch brake	17H5824	9	1			
10	Member with lining—clutch sliding	7H5870	10	1			
11	**Sunwheel planet carrier and annulus assembly**	**17H5861**		1			
12	**Sunwheel assembly**	**17H5864**	11	1			
13	**Carrier assembly—planet**	**17H5865**	12	1			
14	Shaft—planet wheel	17H5844	13	3			
15	Washer—thrust	17H5859	15	3			
16	Roller—needle—planet wheel	17H5846	14	6			
17	Annulus	17H5867	16	1			
18	Washer—phosphor-bronze—sunwheel thrust—rear	7H5877	17	1	17H5869		7H5877 not available; use 17H5869
19	Inner member—roller clutch	7H5879	18	1			
20	Roller—clutch	17H5823	19	1 set			
21	Cage—roller	7H5881	20	1			
22	Ring—spring—clutch	7H5882	21	1	7H8273		7H5882 not available; use 7H8273
23	Washer—thrust—phosphor-bronze—clutch to annulus	7H5883	22	1			
24	Bearing—annulus—front	2K5507	23	1			
25	Bearing—annulus—rear	7H5884	24	1			
26	Washer—steel—annulus end float—·146″ (3·70 mm.)	7H5885E	25	A/R			
27	Washer—steel—annulus end float—·151″ (3·83 mm.)	7H5885F		A/R			
28	Washer—steel—annulus end float—·156″ (3·96 mm.)	7H5885G		A/R			
29	Washer—steel—annulus end float—·161″ (4·08 mm.)	7H5885H		A/R			
30	Washer—steel—annulus end float—·166″ (4·21 mm.)	7H5885J		A/R			

Item No.	DESCRIPTION	Commencing (E) 29D-H101 Part Number	Illus. No.	Quantity	MODIFICATIONS New Part Number	MODIFICATIONS Change Point	REMARKS
	Gearbox with Overdrive—*continued*						
1	**Casing—rear**	**17H5822**	**26**	**1**			
2	Stud—rear casing to front casing	7H5834	27	4	FHS0513		7H5834 not available; use FHS0513
3	Nut—rear casing to front casing	FNZ105	29	6			
4	Washer—spring—nut	LWZ205	28	6			
5	Flange—coupling	17H5821	30	1			
6	Seal—oil—flange	7H5888	31	1	17H5854		7H5888 not available; use 17H5854
7	Nut—slotted—flange to annulus	7H5889	33	1			
8	Washer—plain—nut	PWN112	32	1			
9	**Pinion assembly—speedometer**	**17H5863**		**1**			
10	Pinion—speedometer	17H5855	34	1			
11	**Bearing assembly**	**17H5819**	**35**	**1**			
12	'O' ring for bearing	17H5818	36	1			
13	Seal—oil	NSP	37	1			
14	Screw—pinion locking	7H5894	38	1			
15	Washer—spring—screw	LWZ205	39	1			
16	Bolt—clutch housing to rear plate—1½" (3·81 cm.)	HBN0612	41	1			
17	Washer—spring—bolt	LWN206	44	1			
18	Bolt—clutch housing to rear plate—1⅜" (3.50 cm.)	HBN0611	42	4			
19	Washer—spring—bolt	LWN206	44	4			
20	Nut—bolt	FNN106	43	4			
21	Dowel bolt—clutch housing to rear plate	AEC3224	45	2	AEC3487	Com. (E) 29E-H2246	
22	Washer—spring—dowel bolt	LWN206	47	2			
23	Nut—dowel bolt	FNN106	46	2			
24	Adaptor box—speedometer drive	1H3131	40	1			

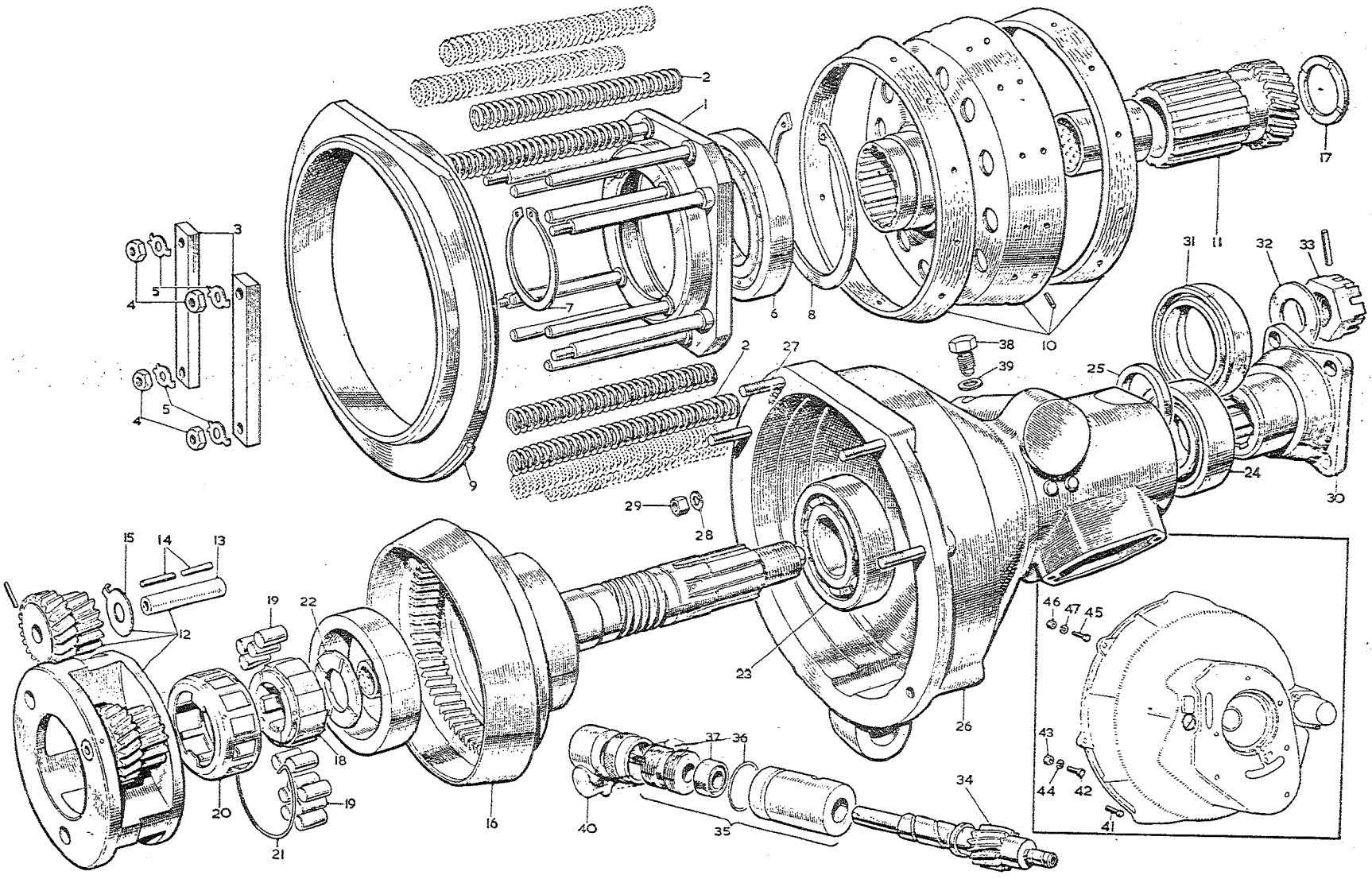

To face page F.22

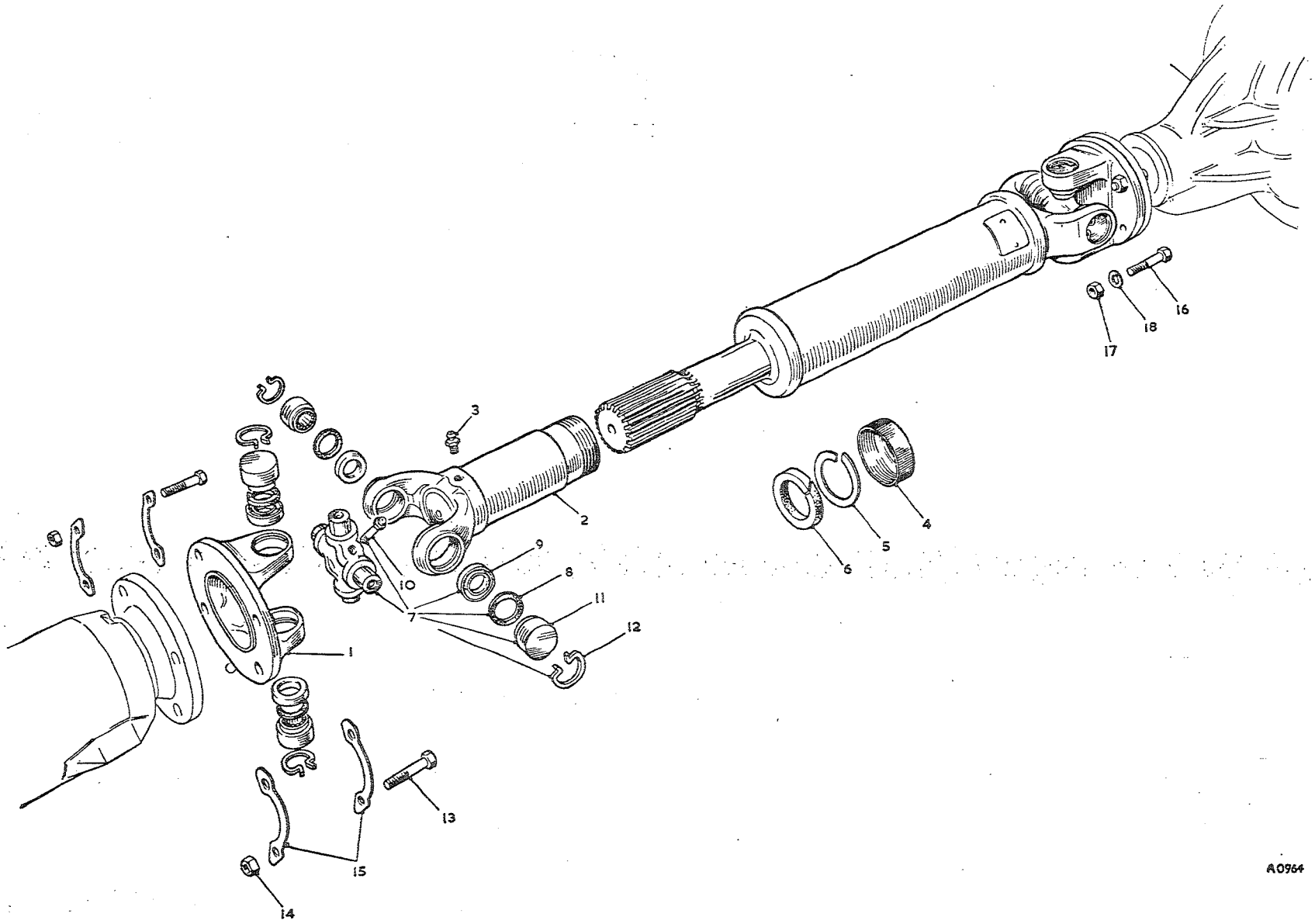

To face page G.1

TRANSMISSION

PROPELLER SHAFT

Item No.	DESCRIPTION	Commencing (C) 101 Part Number	Illus. No.	Quantity	MODIFICATIONS New Part Number	MODIFICATIONS Change Point	REMARKS
1	**Shaft—propeller**	**1B7489**		1			
2	Yoke—flange	7H3902	1	1			
3	Yoke—sleeve	7H3905	2	1			
4	Lubricator—sleeve yoke	7H3859	3	1	UHN400		7H3859 not available; use UHN400
5	Cap—dust—sleeve yoke	7H3835	4	1			
6	Washer—dust cap (steel)	7H3836	5	1			
7	Washer—dust cap (cork)	7H3956	6	1			
8	**Journal assembly**	**8G3001**	**7**	**2**			
9	Gasket	7H3962	8	8			
10	Retainer—gasket	7H3918	9	8			
11	Lubricator—journal	7H3858	10	2			
12	Bearing assembly—needle	7H3912	11	8			
13	Circlip—bearing	7H3913	12	8			
14	Bolt—flange to gearbox	ATC7071	13	4			
15	Lockwasher—bolt	1B7386	15	4			] Not required when overdrive is fitted
16	Bolt—flange to overdrive	1B7474		4			
17	Lockwasher—bolt	2K5914		2			] For use when overdrive is fitted
18	Nut—bolt	FNZ106	14	4			
19	Bolt—flange to bevel pinion	53K1048	16	4			
20	Nut—bolt	LNZ206	17	4			
21	Washer—spring—nut	LWZ306	18	4			

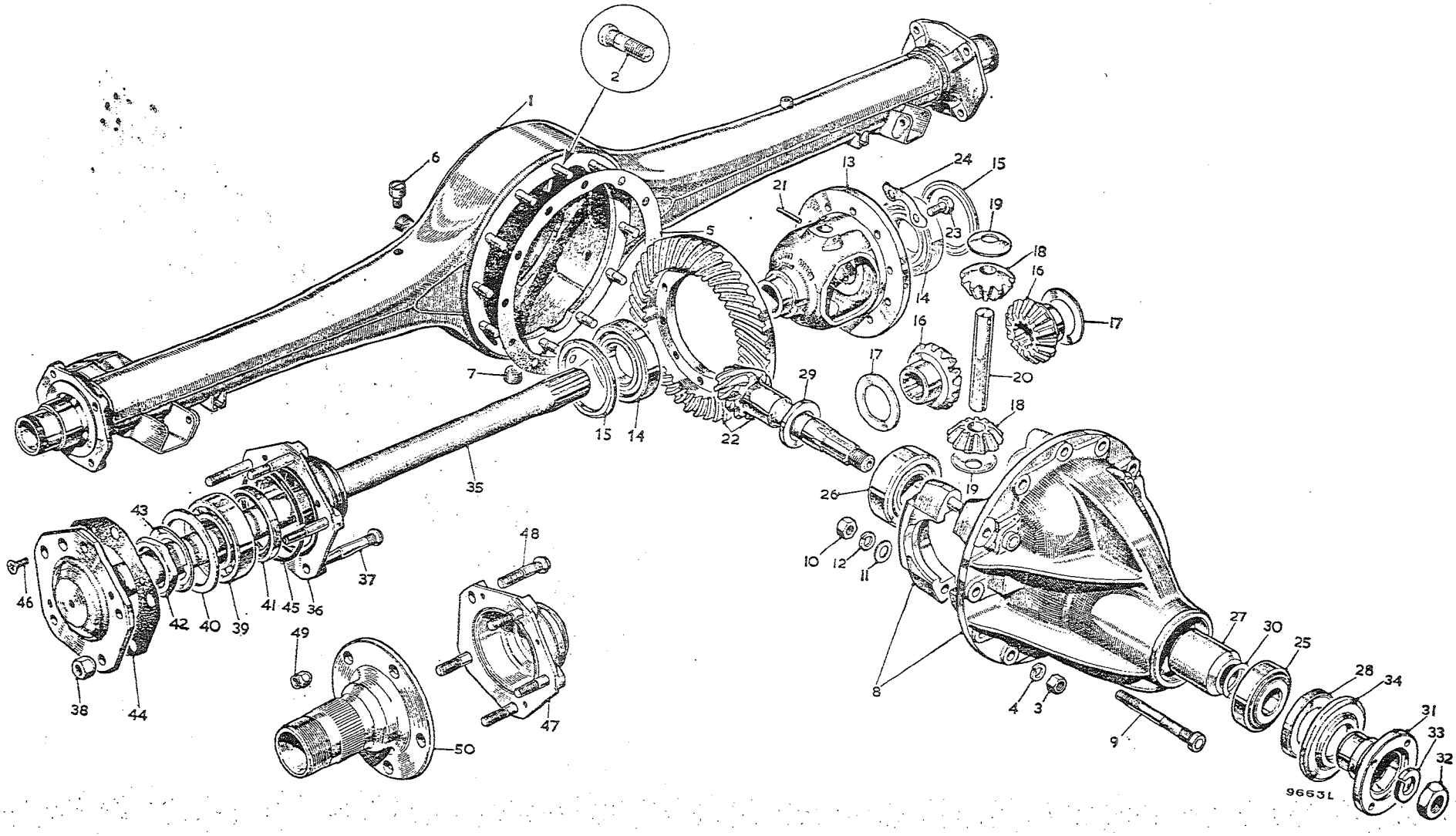

To face page H.1

REAR AXLE AND SUSPENSION

Item No.	DESCRIPTION	Commencing (C) 101 Part Number	Commencing (C) 101 Illus. No.	Quantity	MODIFICATIONS New Part Number	MODIFICATIONS Change Point	REMARKS
1	**Rear axle assembly**	**NSP**		1			
2	**Case assembly**	**ATC7315**	1	1			
3	Nut—bearing retaining—RHT	ATC7062	42	1			
4	Nut—bearing retaining—LHT	ATC7309		1			
5	Bolt—differential carrier	ATC7125	2	12			
6	Nut—bolt	FNZ106	3	12			
7	Washer—spring—nut	LWZ306	4	12			
8	Washer—bearing retaining nut	ATC7310	43	2			
9	Joint to axle case	ATC7124	5	1			
10	**Breather assembly**	**1G3668**	6	1	1H3364		1G3668 not available; use 1H3364
11	Plug—drain	6K499	7	1			
12	Plug—filler	6K499		1			
13	**Differential assembly 11/39 (3·545 to 1 ratio)**	**ATC7568**		1			
14	**Differential assembly 11/43 (3·909 to 1 ratio)**	**ATC7290**		1			For use when overdrive is fitted
15	**Carrier assembly**	**ATC7288**	8	1			
16	Bolt—serrated—cap	ATC7083	9	4			
17	Nut—bolt	FNN107	10	4			
18	Washer—plain—nut	ATC7084	11	4			
19	Washer—spring—nut	LWZ307	12	4			
20	**Cage—differential**	**ATC7189**	13	1			Part No. change; was ATC7110
21	Bearing—differential	2K6541	14	2			
22	Washer—bearing packing—·193″ (4·90 mm.)	ATC7268	15	2			
23	Washer—bearing packing—·191″ (4·85 mm.)	ATC7267		2			
24	Washer—bearing packing—·189″ (4·80 mm.)	ATC7266		2			
25	Washer—bearing packing—·187″ (4·74 mm.)	ATC7061		2			
26	Washer—bearing packing—·185″ (4·69 mm.)	ATC7111		2			
27	Washer—bearing packing—·183″ (4·64 mm.)	ATC7112		2			
28	Washer—bearing packing—·181″ (4·59 mm.)	ATC7113		2			
29	Washer—bearing packing—·179″ (4·54 mm.)	ATC7114		2			
30	Washer—bearing packing—·177″ (4·49 mm.)	ATC7115		2			
31	Washer—bearing packing—·175″ (4·44 mm.)	ATC7116		2			
32	**Gear**	**ATC7262**	16	2			
33	Washer—thrust—gear	ATC7106	17	2			
34	Pinion	ATC7263	18	2			
35	Washer—thrust—pinion	ATC7104	19	2			
36	Pin—pinion	ATC7107	20	1			
37	Peg—pinion pin	ATC7108	21	1			

Two used of selected size

Item No.	DESCRIPTION	Commencing (C) 101 Part Number	Illus. No.	Quantity	MODIFICATIONS New Part Number	MODIFICATIONS Change Point	REMARKS
	Rear Axle and Suspension—*continued*						
1	**Crown wheel and pinion 11/39**	**ATC7564**	**22**	**1**			
2	**Crown wheel and pinion 11/43**	**8G7131**		**1**			**Part No. change was ATC7182** — **For use when overdrive is fitted**
3	Bolt to cage	ATA7043	23	10			
4	Washer—lock—bolt	ATC7109	24	5			
5	Washer—pinion thrust—·222″ (5·638 mm.)	ATC7092	29	1			One used of selected size
6	Washer—pinion thrust—·220″ (5·588 mm.)	ATC7093		1			
7	Washer—pinion thrust—·218″ (5·537 mm.)	ATC7094		1			
8	Washer—pinion thrust—·216″ (5·486 mm.)	ATC7095		1			
9	Washer—pinion thrust—·214″ (5·435 mm.)	ATC7096		1			
10	Washer—pinion thrust—·212″ (5·384 mm.)	ATC7097		1			
11	Washer—pinion thrust—·210″ (5·334 mm.)	ATC7098		1			
12	Washer—pinion thrust—·208″ (5·283 mm.)	ATC7099		1			
13	**Bearing—pinion—inner**	**ATC7089**	**26**	**1**			
14	Distance piece—bearing	ATC7172	27	1			
15	**Bearing—pinion—outer**	**ATC7091**	**25**	**1**			
16	Shim—outer bearing—·004″ (·101 mm.)	ATC7152	30	A/R			
17	Shim—outer bearing—·006″ (·152 mm.)	ATC7153		A/R			
18	Shim—outer bearing—·008″ (·203 mm.)	ATC7154		A/R			
19	Shim—outer bearing—·010″ (·254 mm.)	ATC7155		A/R			
20	Shim—outer bearing—·012″ (·304 mm.)	ATC7156		A/R			
21	Shim—outer bearing—·020″ (·508 mm.)	ATC7157		A/R			
22	Shim—outer bearing—·030″ (·762 mm.)	ATC7158		A/R			
23	Seal—oil	ATC7085	28	1			
24	Cover—dust	ATC7101	34	1			
25	Flange—universal joint	ATC7100	31	1			
26	Nut—flange to pinion	FNZ612	32	1			
27	Washer—spring—nut	LWZ212	33	2			
28	**Shaft—axle**	**ATC7394**	**35**	**2**			
29	Joint—shaft to hub	ATC7589	44	2			
30	Screw—countersunk—shaft to hub	CMZ0408	46	2			
31	**Hub assembly**	**ATC7595**	**36**	**2**			**Disc wheels only**
32	Stud—wheel	ATC7344	37	10			
33	Nut—wheel stud	1G8075	38	10			Alternatives — **Disc wheels only**
34	Nut—wheel stud	ATB7285		10			Alternatives — **Disc wheels only**
35	**Hub assembly**	**ATC7593**	**47**	**2**			**Wire wheels only**
36	Stud	ATC7257	48	10			**Wire wheels only**
37	Nut—conical—stud	ATB7198	49	10			**Wire wheels only**
38	Extension—hub R/H	ATC7236	50	1			**Wire wheels only**
39	Extension—hub L/H	ATC7237		1			**Wire wheels only**
40	Ring—oil seal	ATC7588	45	2			
41	Seal—oil	3H1589	41	2			
42	**Bearing**	**ATC7060**	**39**	**2**			
43	Spacer—bearing	ATC7569	40	2			

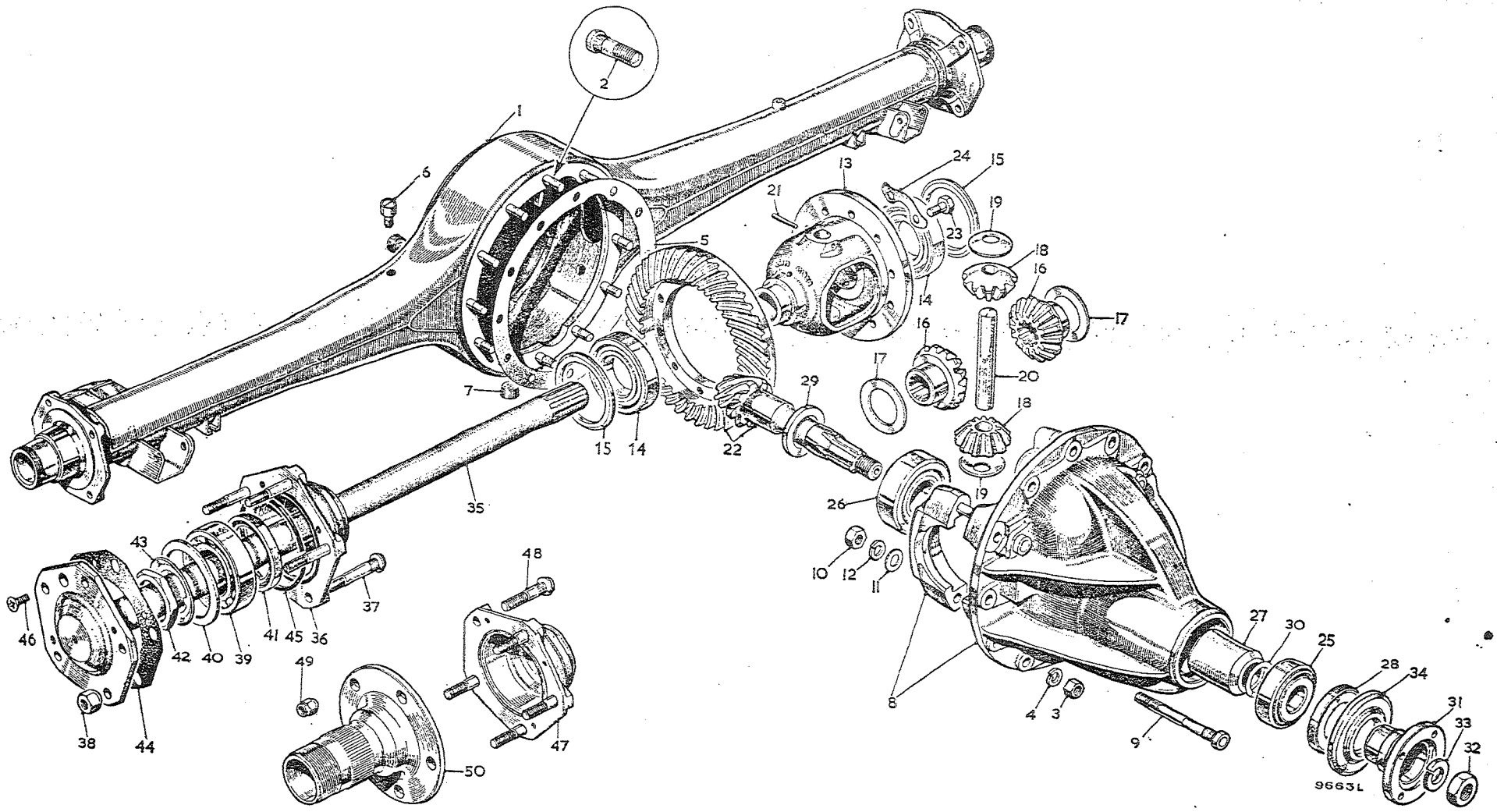

To face page H.2

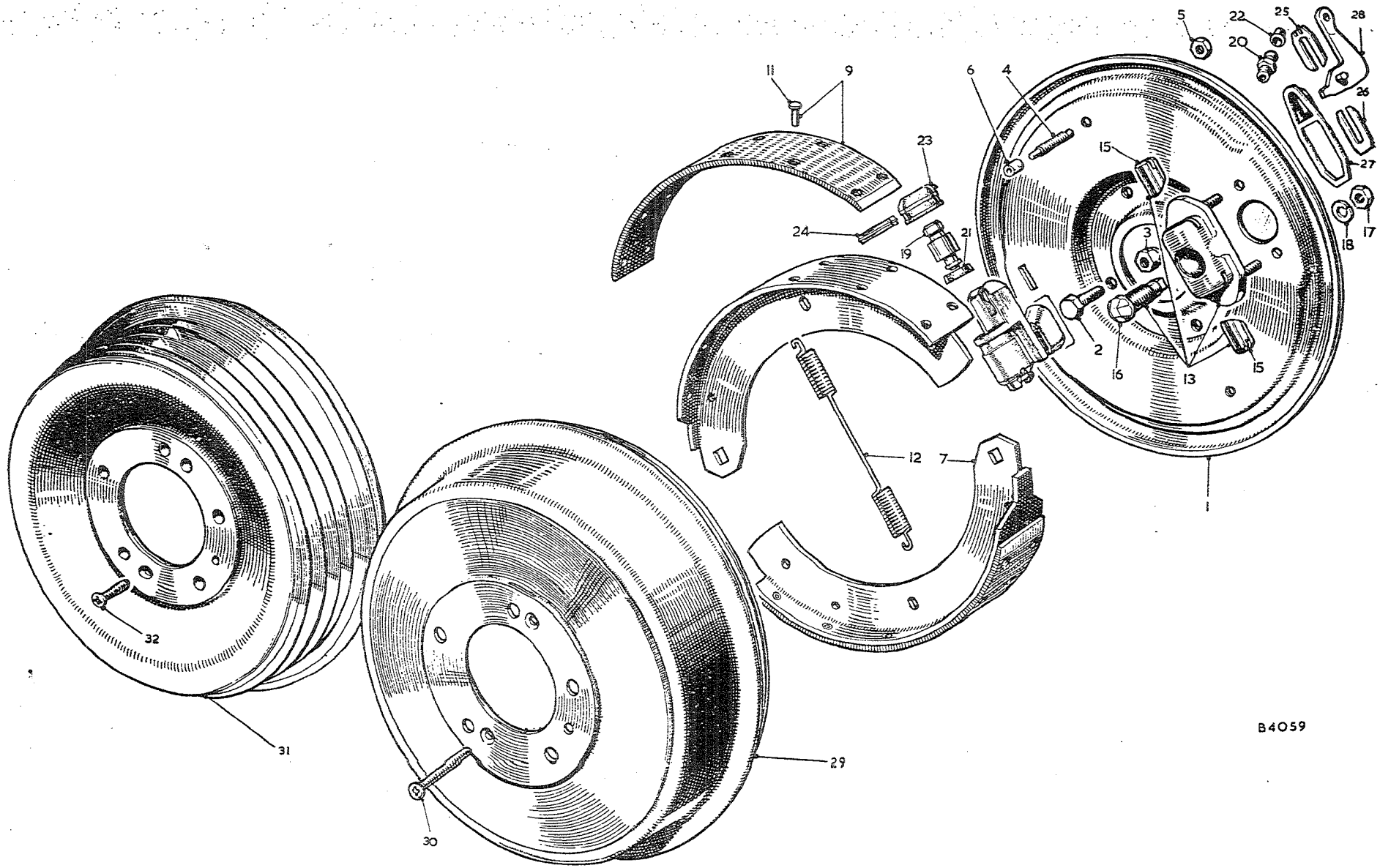

To face page H.3

Item No.	DESCRIPTION	Commencing (C) 101 Part Number	Illus. No.	Quantity	MODIFICATIONS New Part Number	MODIFICATIONS Change Point	REMARKS
	BRAKES						
1	Plate—brake RH	1B7437	1	1			
2	Plate—brake LH	1B7438	1	1			
3	Bolt—brake plate to axle case	ATC7071	2	8			
4	Nut—bolt	LNZ206	3	8			
5	Post—steady	7H4461	4	4			
6	Nut—steady post	FNZ205	5	4			
7	Bush—steady post (felt)	7H4429	6	4			Part No. change; was 17H4604
8	**Shoe assembly—rear brake**	**8G8282**	**7**	**2 sets**			Standard brakes
9	Shoe assembly	NSP		4			
10	**Liner with rivets**	**8G8281**	**9**	**1 set**			
11	Liner	NSP		4			
12	Rivet	7H4989	11	48			
13	**Shoe assembly—rear brake**			**2 sets**	**8G8649**	**Com. (C) 15104**	Servo assisted brakes
14	**Liner with rivets**			**1 set**	**8G8650**		
15	Rivet			48	7H4989		
16	Spring—brake shoe return	7H4596	12	4			
17	**Adjuster assembly**	**7H4997**	**13**	**2**			
18	**Body—adjuster**	**NSP**		**2**			
19	Tappet—adjuster	7H4998	15	4			
20	Wedge—adjuster	1G4116	16	2			
21	Nut—adjuster to brake plate	FNZ106	17	4			Part No. change; was 7H4999
22	Washer—spring—nut	LWN206	18	4			Part No. change; was 2K5863
23	**Cylinder assembly—wheel**	**17H4641**		**2**			
24	Piston—wheel cylinder	17H4690	19	2			
25	Screw—bleed for wheel cylinder	7H4973	20	2			
26	Seal—wheel cylinder piston	17H4507	21	2			
27	Cover—dust—wheel cylinder bleed screw	7H4419	22	2			
28	Cover—dust—wheel cylinder piston	17H4546	23	2			
29	Retainer—piston dust cover	7H4918	24	2			
30	Spring—retaining wheel cylinder	7H4904	25	2			
31	Plate—locking—retaining spring	7H4907	26	2			
32	Cover—dust—wheel cylinder to brake plate	7H4906	27	2			
33	Lever assembly—handbrake	7H4990	28	2			
34	Drum—brake	1B7490	29	2			Disc wheels only
35	Screw—drum to hub	CMZ0428	30	4			
36	Drum—brake	1B7526	31	2			Wire wheels only
37	Screw—drum to hub	CMZ0414	32	4			

Item No.	DESCRIPTION	Commencing (C) 101 Part Number	Commencing (C) 101 Illus. No.	Quantity	MODIFICATIONS New Part Number	MODIFICATIONS Change Point	REMARKS
	Brakes—*continued*						
1	**Kit—wheel cylinder repair**	8G8280		1			
2	Seal—wheel cylinder piston			2			
3	Cover—dust—wheel cylinder bleed screw			2			
4	Cover—dust—wheel cylinder piston			2			
5	Retainer—piston dust cover			2			
6	**Kit—adjuster**	8G7070		2			
7	Tappet—adjuster			4			
8	Wedge—adjuster			2			

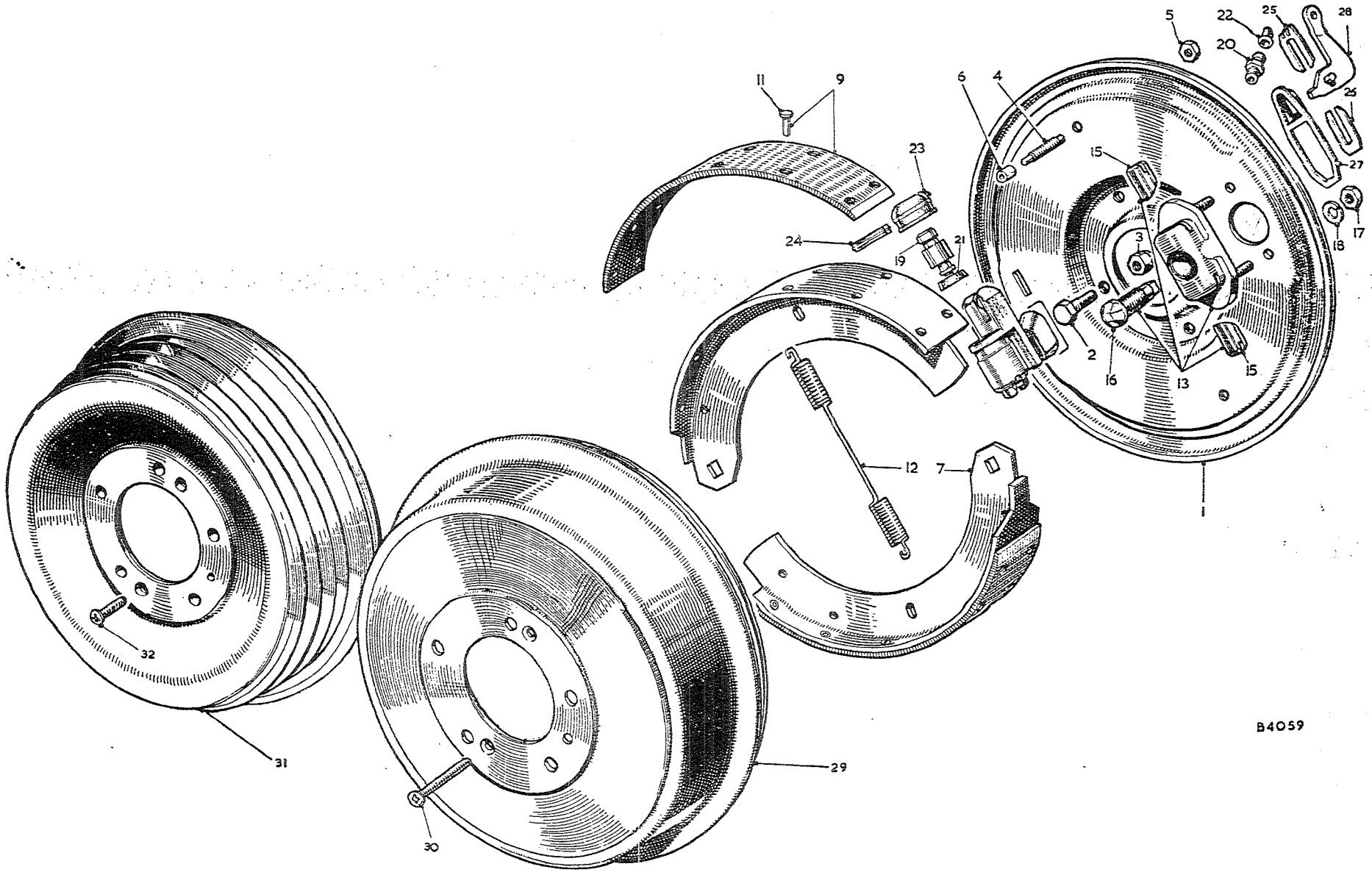

To face page H.4

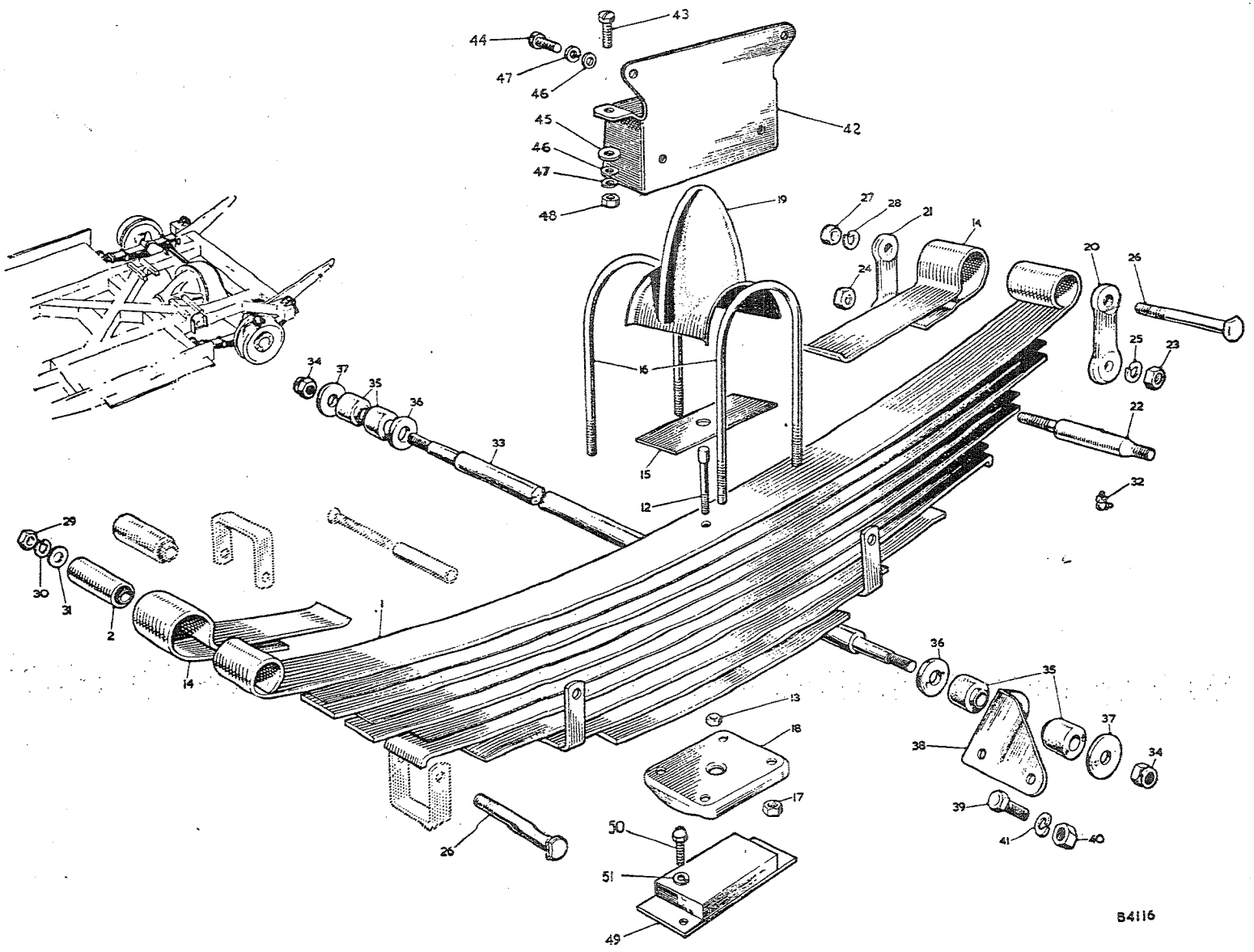

To face page H.5

Item No.	DESCRIPTION	Commencing (C) 101 Part Number	Illus. No.	Quantity	MODIFICATIONS New Part Number	MODIFICATIONS Change Point	REMARKS
	REAR SPRING						
1	**Spring assembly**	**11B5266**		2			
2	**Leaf—main**	**1B8930**	1	2			
3	Bush	2H4605	2	4			] Alternatives
4	Bush	1H5286		4			
5	Leaf—second	NSP		2			
6	Leaf—third	NSP		2			
7	Leaf—fourth	NSP		2			
8	Leaf—fifth	NSP		2			
9	Leaf—sixth	NSP		2			
10	Leaf—seventh	NSP		2			
11	Leaf—zinc—top	1B8762		2			
12	Leaf—zinc—second	1B8763		2			
13	Leaf—zinc—third	1B8764		2			
14	Toe bolt	2A5006	12	2			
15	Nut—tie bolt	FNZ104	13	2			
16	Spring eye reinforcement	11B5199	14	4			
17	Pad (fibre)	1G5753	15	2			
18	Clip—spring	11B5070	16	4			
19	Nut—clip	LNZ206	17	8			
20	Plate—spring clip	11B5071	18	2			
21	Buffer—spring	11B5068	19	2			
22	Shackle—rear spring outer	1A9222	20	2			
23	Shackle—rear spring inner	1A9223	21	2			
24	Pin—shackle bottom	1G9320	22	2			
25	Nut—pin	FNZ106	23	2			
26	Lock nut	FNZ206	24	4			
27	Washer—spring—nut	LWZ206	25	2			
28	Pin—rear spring—top and front	1G9321	26	4			
29	Nut—top pin	FNZ107	27	2			
30	Washer—spring—nut	LWZ207	28	2			
31	Nut—front—pin	FNZ107	29	2			
32	Washer—spring—nut	LZW207	30	2			
33	Washer—plain—nut	PWZ107	31	2			
34	Nipple—grease	2A5393	32	2			
35	Bracket—spring buffer	1B7480	42	2			
36	Screw—bracket to body	PMZ0412	43	4			
37	Screw—bracket to wheel arch	HZS0404	44	4			
38	Washer—plain—large—screw	PWZ204	45	4			
39	Washer—plain—small—screw	PWZ104	46	8			
40	Washer—spring—screw	LWZ204	47	8			
41	Nut—screw	FNZ104	48	4			

Item No.	DESCRIPTION	Commencing (C) 101 Part Number	Illus. No.	Quantity	MODIFICATIONS New Part Number	MODIFICATIONS Change Point	REMARKS
	Rear Spring—*continued*						
1	Buffer—rebound—rear axle	11B5234	49	2			
2	Screw—buffer to side member	HZS0405	50	4			
3	Washer—spring—screw	LWZ304	51	4			
	TIE ROD						
4	Rod assembly—tie	1B7366	33	1			
5	Nut—lock	53K1393	34	2	LNZ206		53K1393 not available; use LNZ206
6	Bush (rubber)	3H3079	35	4			
7	Washer—bush	2K6842	36	2			
8	Washer—bush	PWZ206	37	2			
9	Bracket—tie rod	1B7470	38	1			Part No. change; was 1B8811
10	Bolt—fixing bracket	HZS0607	39	2			
11	Nut—bolt	FNZ106	40	2			
12	Washer—spring—nut	LWZ306	41	1			

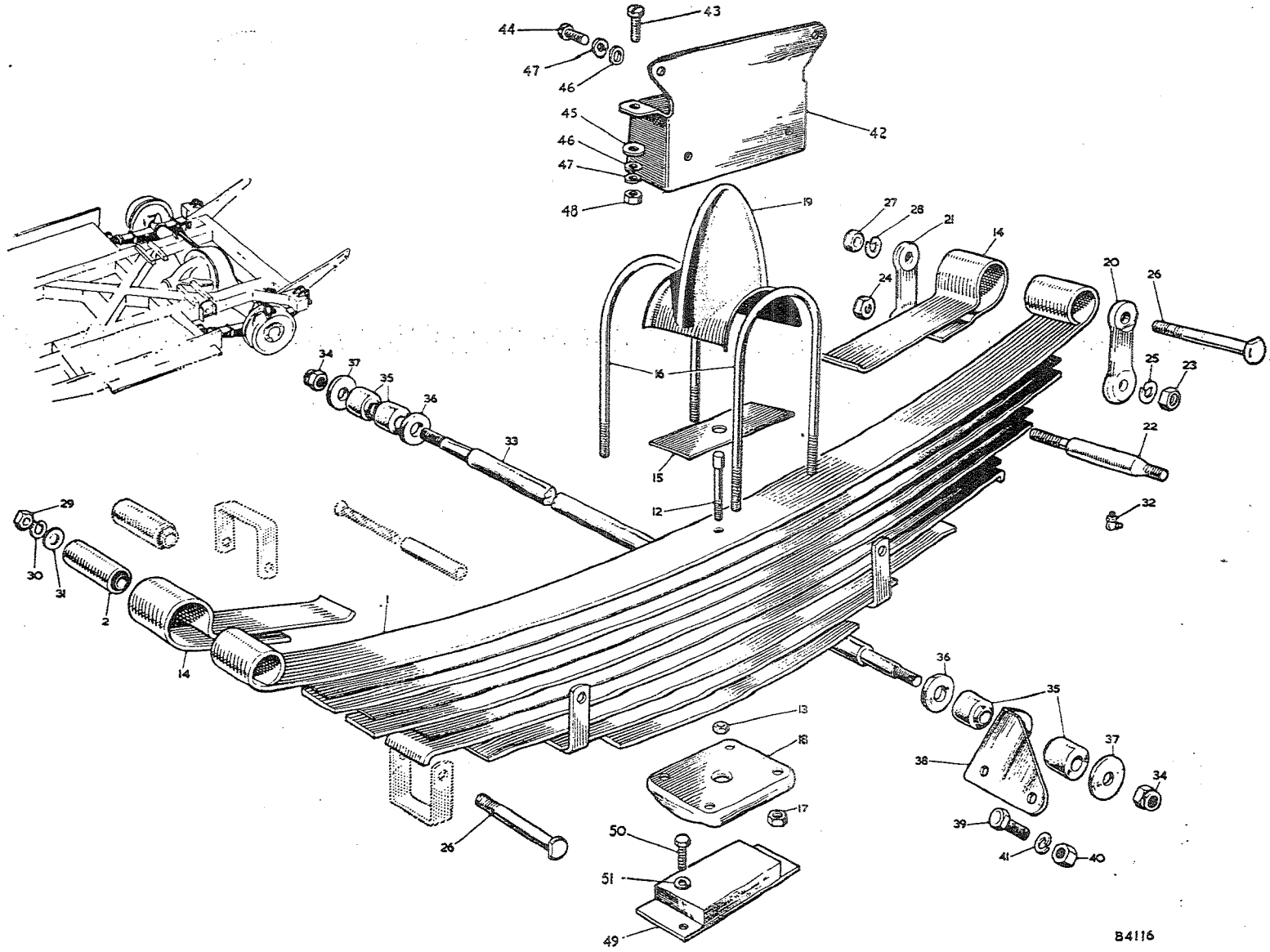

To face page H.6

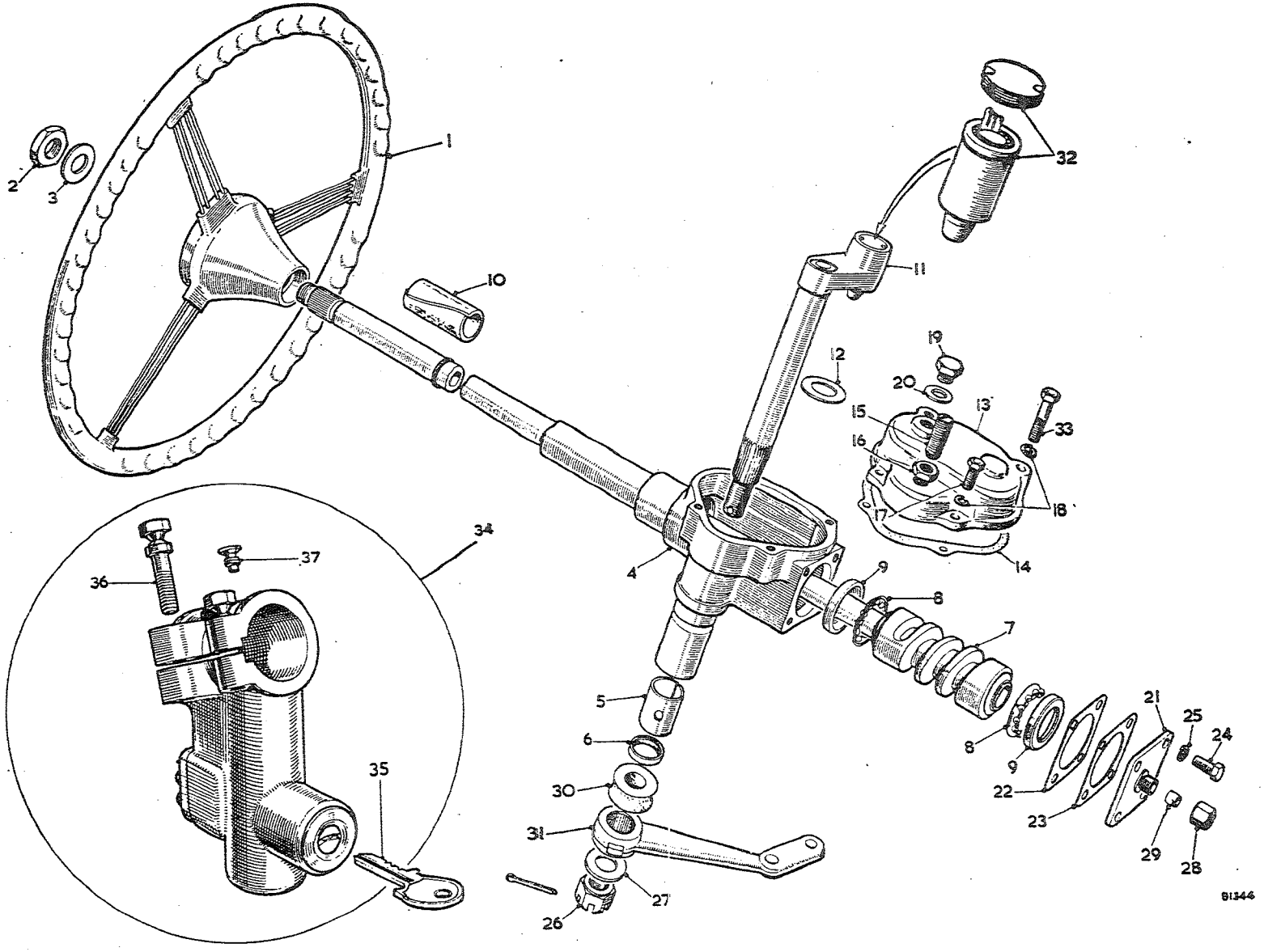

To face page J.1

STEERING

Item No.	DESCRIPTION		Commencing (C) 101 Part Number	Illus. No.	Quantity	MODIFICATIONS New Part Number	MODIFICATIONS Change Point	REMARKS
1	Wheel—steering—17″ (43·18 cm.)		8G624	1	1			] Alternatives
2	Wheel—steering—16½″ (41·96 cm.)		AHB6000		1			
3	Nut—steering wheel		2K6057	2	1			
4	Washer—shakeproof—nut		2K8929	3	1			
5	**Gear assembly—steering**	RHD	**AHB8388**		1			
6	**Gear assembly—steering**	] LHD	**AHB8389**		1			
7	**Gear assembly—steering**		**AHB9162**		1			
8	**Box and outer column**	RHD	**17H6109**	4	1			**For use when steering lock is fitted**
9	**Box and outer column**	] LHD	**17H6107**		1			
10	**Box and outer column**		**17H6542**		1			**For use when steering lock is fitted**
11	Bush		1B6257	5	1			
12	Seal—oil		7H6589	6	1			
13	Column with cam	RHD	17H6110	7	1			
14	Column with cam	] LHD	17H6108		1			
15	Column with cam		17H6543		1			For use when steering lock is fitted
16	Cage assembly—ball		7H6079	8	2			
17	Cup—ball cage		7H6116	9	2			
18	Bush (felt)		ACA5297	10	1			Part No. change; was 7H6511
19	**Shaft—rocker**		**17H6106**	11	1			
20	Roller assembly—cam		7H6407	32	1			
21	Washer—belleville		7H6620	12	6			
22	Cover—side	RHD	7H6599	13	1			
23	Cover—side	LHD	7H6598		1			
24	Joint washer—side cover		7H6515	14	1	17H8153		7H6515 not available; use 17H8153
25	Screw—thrust		17H6103	15	1			
26	Nut—lock—screw		7H6155	16	1			
27	Bolt—side cover—¾″ (1·90 cm.)		HNS0506	17	2			
28	Bolt—side cover—1½″ (3·81 cm.)		HBZ0512	33	2			Part No. change; was 7H6434
29	Washer—spring—bolt		LWZ205	18	4			Part No. change; was 7H6516
30	Plug—oil		7H6391	19	1			
31	Washer—plug		7H6392	20	1			
32	Cover—end		7H6267	21	1			
33	Joint washer—end cover		7H6130	22	1	17H2660		7H6130 not available; use 17H2660
34	Shim—·0024″ (·06 mm.) thick		7H6118	23	A/R			
35	Shim—·005″ (·12 mm.) thick		7H6128	23	A/R			
36	Shim—·010″ (·25 mm.) thick		7H6129	23	A/R			

Item No.	DESCRIPTION	Commencing (C) 101 Part Number	Illus. No.	Quantity	MODIFICATIONS New Part Number	MODIFICATIONS Change Point	REMARKS
	Steering—*continued*						
1	Bolt—end cover	HNS0506	24	4			Part No. change; was 7H6434
2	Washer—spring—bolt	LWZ205	25	4			
3	Nut—lever to gear	7H6436	26	1			
4	Washer—nut	7H6024	27	1	PWN112		7H6024 not available; use PWN112
5	Nut—stator tube	7H6167	28	1			
6	Olive	3H660	29	1			
7	Cover—dust—oil seal (rubber)	1G6236	30	1			
8	Lever—steering side and cross tube **RHD**	1B6277	31	1			
9	Lever—steering side and cross tube **LHD**	1B6278		1			
10	**Lock assembly—steering column**	**ACB9425**	34	1			**Alternative to 13H709** Always quote key or car No.
11	Key	97H2797	35	2			
12	Bolt—shear	ACB9427	36	2			
13	Screw—location	ACB9428	37	1			
14	**Lock assembly—steering column**	**13H709**		1			**Alternative to ACB9425** Always quote key or car No.
15	Key	17H2807		2			
16	Bolt—shear	17H2805		2			
17	Screw—location	17H8659		1			

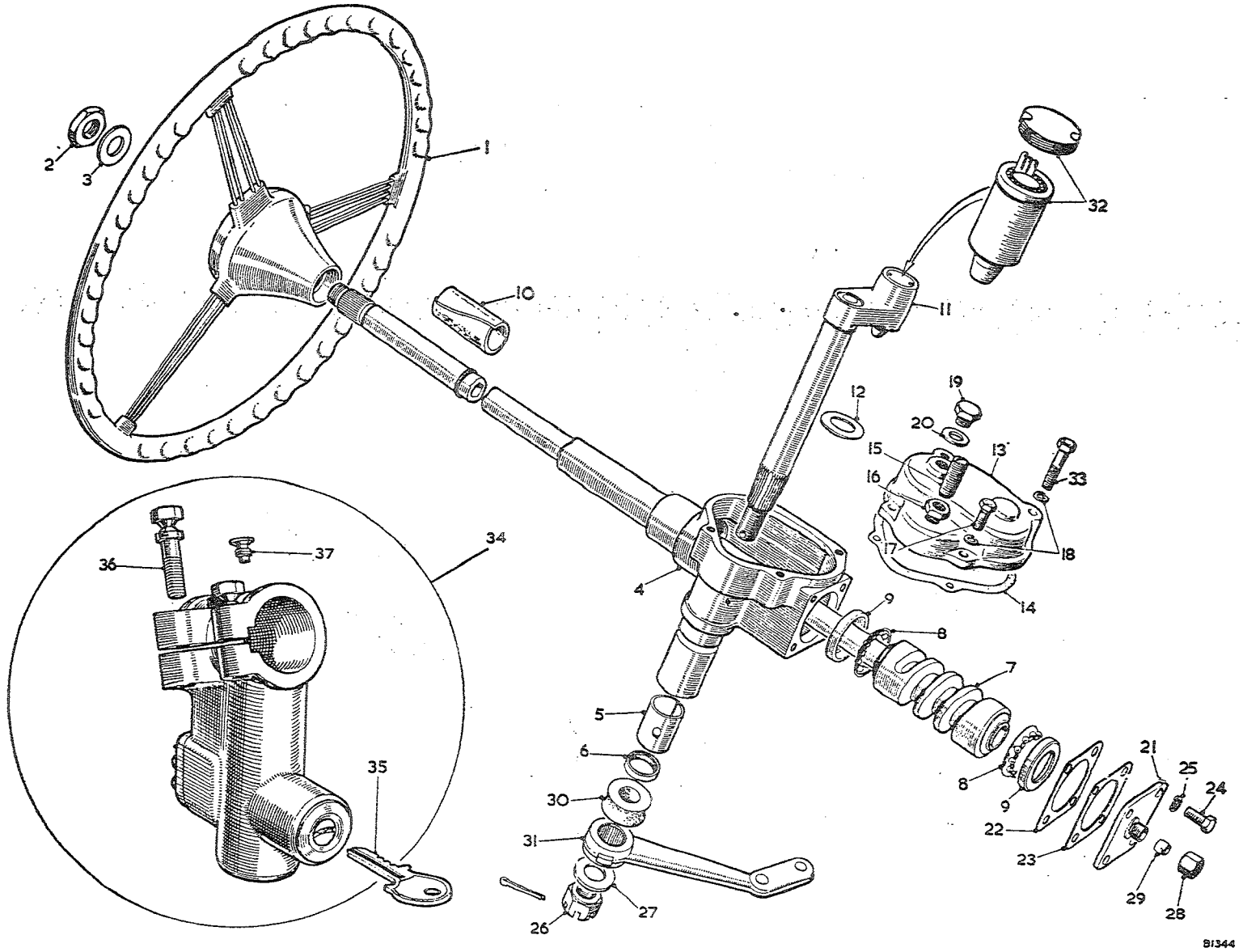

To face page J.2

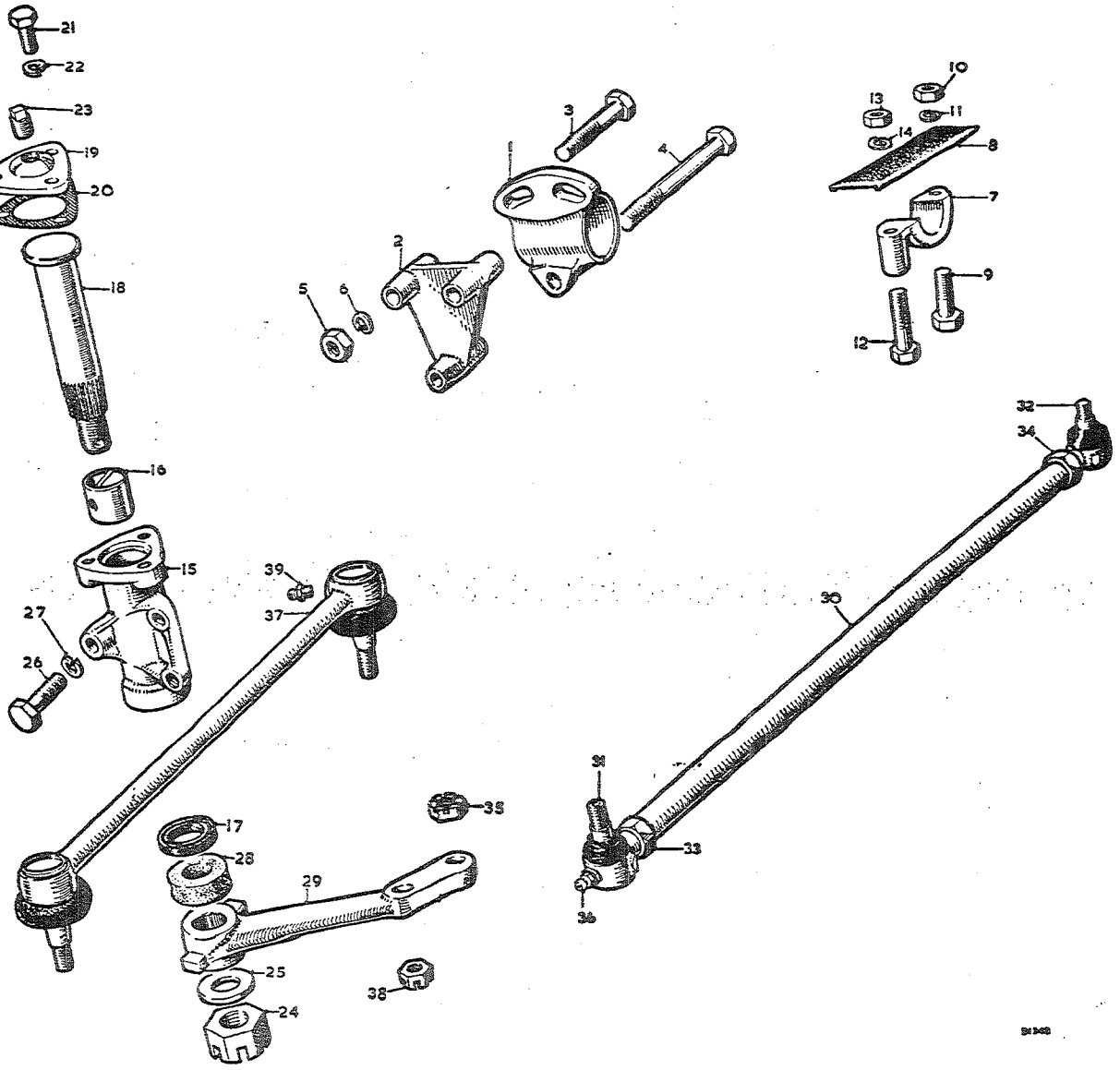

To face page J.3

Item No.	DESCRIPTION	Commencing (C) 101 Part Number	Illus. No.	Quantity	MODIFICATIONS New Part Number	MODIFICATIONS Change Point	REMARKS
	Steering—*continued*						
1	Bracket—steering box	1B6127	1	1			
2	Spacer—bracket	1B6195	2	2			
3	Bolt—bracket to body—short	HBZ0626	3	2			
4	Bolt—bracket to body—long	HBZ0638	4	1			
5	Nut—bolt	FNZ106	5	3			
6	Washer—spring—nut	LWZ306	6	3			
7	Clamp—half—steering column support	1B6199	7	2			
8	Packing piece (rubber)	4B2502	8	1			
9	Bolt—half clamp—short	53K1551	9	1			Part No. change; was 52K155
10	Nut—bolt	FNZ104	10	1			
11	Washer—spring—nut	LWZ304	11	1			
12	Bolt—half clamp—long	HBZ0524	12	1			
13	Nut—bolt	FNZ105	13	1			
14	Washer—spring—nut	LWZ305	14	1			
15	**Gear assembly—idler** RHD	1B6281		1			
16	**Gear assembly—idler** LHD	1B6286		1			
17	**Body—idler** RHD	1B6282	15	1			
18	**Body—idler** LHD	1B6287		1			
19	Bush	1B6257	16	2			
20	Seal—oil	1B6256	17	1			
21	Shaft—idler	1B6285	18	1			
22	Cover	1B6137	19	1			
23	Joint—cover	1B6138	20	A/R			
24	Screw—cover	HZS0506	21	3			
25	Washer—spring—screw	LWZ305	22	3			
26	Plug—filler	2K8209	23	1			
27	Nut—idler shaft	51K370	24	1			
28	Washer—plain—nut	PWZ112	25	1			
29	Screw—idler gear to body	HBZ0624	26	3			
30	Washer—spring—screw	LWZ306	27	3			
31	Cover—dust—oil seal (rubber)	1G6236	28	1			
32	Lever—side and cross tube—idler gear RHD	1B6278	29	1			
33	Lever—side and cross tube—idler gear LHD	1B6277		1			

Item No.	DESCRIPTION	Commencing (C) 101 Part Number	Illus. No.	Quantity	MODIFICATIONS New Part Number	MODIFICATIONS Change Point	REMARKS
	Steering—*continued*						
1	**Rod assembly—cross**	**AHB8883**	30	1	**AHB9608**	**Com. (C) 19191**	**AHB8883 not available; use AHB9608**
2	Rod—cross	1B6340		1	17H2144		1B6340 no longer available; use AHB8883
3	**End—assembly—RHT**	**1G6353**	31	1	17H2142		
4	**End—assembly—LHT**	**1G6354**	32	1	**17H2143**		
5	Cover—dust			2	7H6892	Com. (C) 19191	
6	Ring—spring			2	7H6893		
7	Nut—ball pin			2	FNZ407		
8	Nut—lock—RHT	51K320	33	1	FNZ210		
9	Nut—lock—LHT	51K365	34	1	53K365		For 51K365 use 53K365 for this application
					FNZ2210	Com. (C) 19191	
10	Nut—ball pin	FNZ307	35	2		Com. (C) 19191	
11	Lubricator	UHN400	36	2		Fin. (C) 19190	Part No. change; was 3H1709
12	**Rod assembly—side—less nuts**	**1B6292**	37	2			**Not available; use 7H3777**
13	**Rod assembly—side—with nuts**	**7H3777**		2	**AHB9609**		**7H3777 not available; use AHB9609**
14	Cover—dust			4	7H6892	Com. (C) 19191	
15	Ring—spring			4	7H6893		
16	Nut—ball pin	FNZ307	38	4	FNZ407		
17	Lubricator	UHN400	39	4		Fin. (C) 19190	Part No. change; was 3H1709
1.	ROD ASSEMBLY — CROSS	AHB 9608		1		COM(C)19191	WSE AHB 9608 FOR BREAKDOWN — ITEMS — 2 TO 9 INCL. (PRU2550).

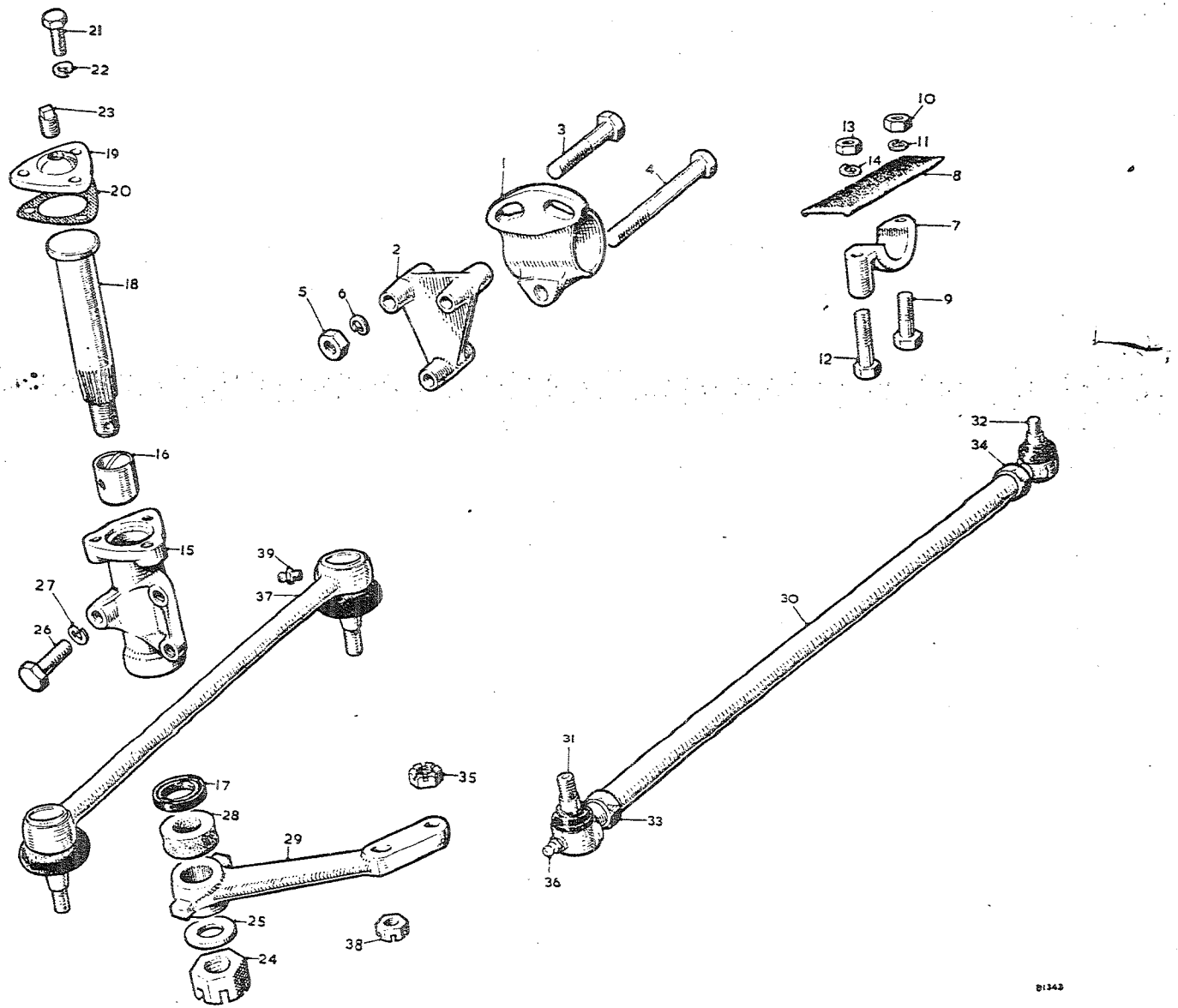

To face page J.4

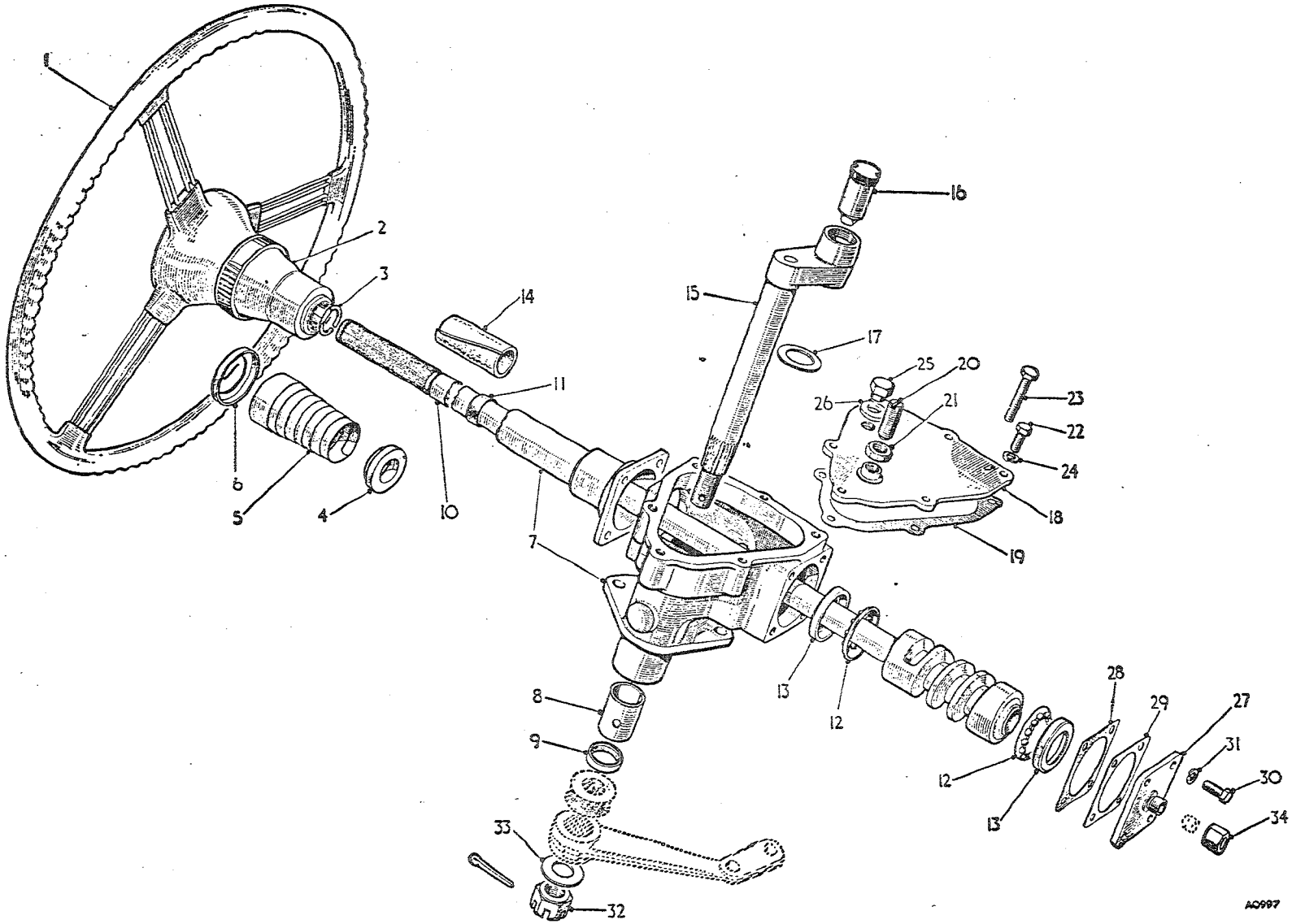

To face page J.5

Item No.	DESCRIPTION	Commencing (C) 101 Part Number	Illus. No.	Quantity	MODIFICATIONS New Part Number	MODIFICATIONS Change Point	REMARKS
	ADJUSTABLE STEERING (Optional Extra)						
1	Wheel—steering	1B6299	1	1			
2	Nut—clamping	1B6300	2	1			
3	Ring—spring	1F6153	3	1			
4	Support—telescopic spring dust cover	1B6214	4	1			
5	Cover—telescopic spring dust	1D6132	5	1			
6	Cup—dust cover	1B6301	6	1			
7	**Gear assembly—steering** RHD	**AHB8314**		1			
8	**Gear assembly—steering** LHD	**AHB8312**		1			
9	**Gear assembly—steering** LHD	**AHB9164**		1			**For use when steering lock is fitted**
10	**Box and outer column** RHD	**17H6161**	7	1			
11	**Box and outer column** LHD	**17H6163**		1			
12	**Box and outer column** LHD	**17H6545**		1			**For use when steering lock is fitted**
13	Bush	1B6257	8	1			
14	Seal—oil	7H6589	9	1			
15	**Column with cam** RHD	**17H6162**	10	1			
16	**Column with cam** LHD	**17H6164**		1			
17	**Column with cam** LHD	**17H6544**		1			**For use when steering lock is fitted**
18	Ring (rubber)	7H6460	11	2			
19	Ring—locking	17H6536		1			For use when steering lock is fitted
20	Screw—ring LHD	PMZ0316		1			
21	Washer—shakeproof—screw	LWZ403		1			
22	Cage assembly—ball	7H6079	12	2			
23	Cup—ball—cage	7H6116	13	2			
24	Bush—felt	ACA5297	14	1			Part No. change; was 7H6511
25	**Shaft—rocker**	**17H6106**	15	1			
26	Roller assembly—cam	7H6507	16	1			
27	Washer (belleville)	7H6620	17	6			
28	Cover—side RHD	7H6599	18	1			
29	Cover—side LHD	7H6598		1			
30	Joint washer—side cover	7H6515	19	1	17H8153		7H6515 not available; use 17H8153
31	Screw—thrust	17H6103	20	1			
32	Nut—lock—screw	17H6155	21	1			
33	Bolt—side cover—$\frac{3}{4}$" (1·90 cm.)	HNS0506	22	2			Part No. change; was 7H6434
34	Bolt—side cover—$1\frac{1}{2}$" (3·81 cm.)	HBZ0512	23	2			Part No. change; was 7H6516
35	Washer—spring—bolt	LWZ205	24	4			
36	Plug—oil	7H6391	25	1			
37	Washer—plug	7H6392	26	1			

Item No.	DESCRIPTION	Commencing (C) 101 Part Number	Illus. No.	Quantity	MODIFICATIONS New Part Number	MODIFICATIONS Change Point	REMARKS
	Adjustable Steering—*continued*						
1	Cover—end	7H6267	27	1			
2	Joint washer—end cover	7H6130	28	1	17H2660		7H6130 not available; use 17H2660
3	Shim—·0024″ (·06 mm.) thick	7H6118	29	A/R			
4	Shim—·005″ (·12 mm.) thick	7H6128		A/R			
5	Shim—·010″ (·25 mm.) thick	7H6129		A/R			
6	Bolt—end cover	HNS0506	30	4			Part No. change; was 7H6434
7	Washer—spring—bolt	LWZ205	31	4			
8	Nut—lever to gear	7H6436	32	1			
9	Washer—nut	7H6024	33	1	PWN112		7H6024 not available; use PWN112
10	Nut—stator tube	7H6167	34	1			

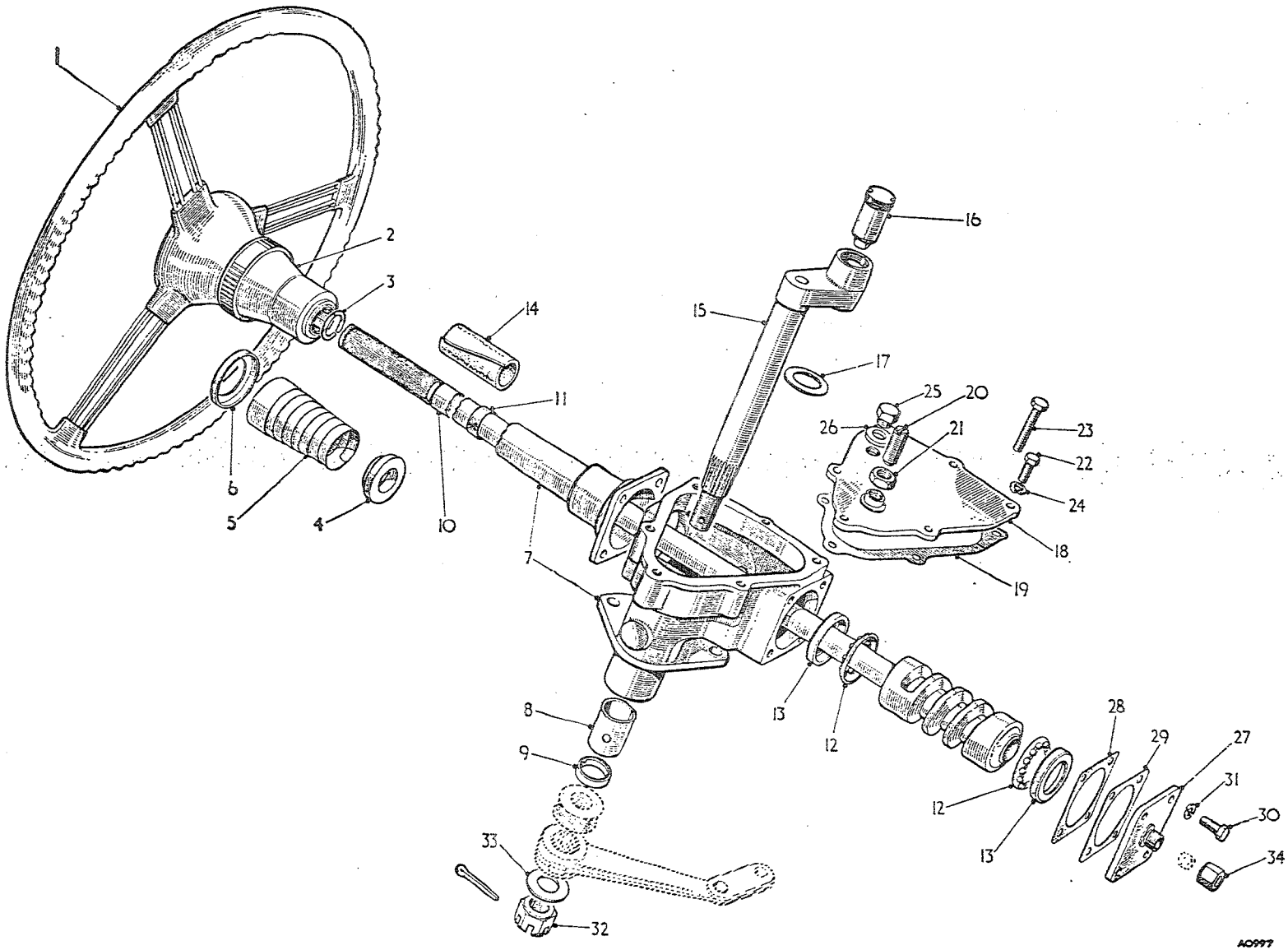

To face page J.6

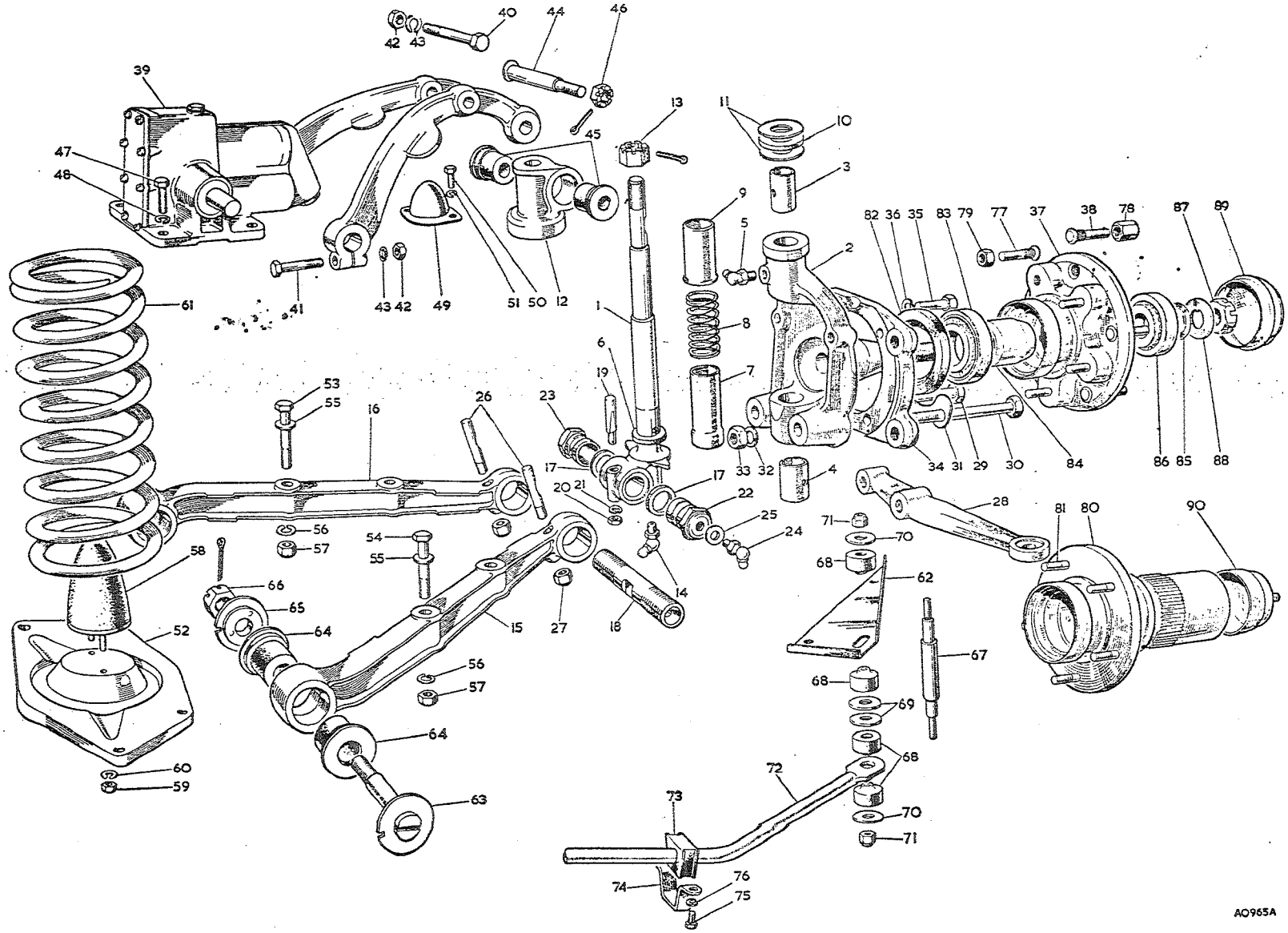

To face page K.1

FRONT SUSPENSION

Item No.	DESCRIPTION	Commencing (C) 101 Part Number	Commencing (C) 101 Illus. No.	Quantity	MODIFICATIONS New Part Number	MODIFICATIONS Change Point	REMARKS
1	**Front suspension assembly—RH**	**NSP**		1			
2	**Front suspension assembly—LH**	**NSP**		1			
3	Pin—swivel	1G4345	1	2	11H1018		For 1G4345 use 11H1018 for this application
4	**Axle assembly—swivel**	**1B4517**	2	2	BTC 324	Com(c) 22226	PAU 2071
5	Bush—top	1A4744	3	2			
6	Bush—bottom	1A4745	4	2	11H924	Com(c) 22226	PAU 2071
7	Lubricator—top bush	3H2192	5	2	UHN490		3H2192 not available; use UHN490
8	Ring—swivel pin (cork)	1A4746	6	2			
9	Tube—dust excluder—bottom	1A4756	7	2	11H921	Com(c) 22226	PAU 2071
10	Spring—dust excluder	2K8951	8	2			
11	Tube—dust excluder—top	1G4271	9	2			
12	Washer—thrust	1A4751	10	2			
13	Washer—thrust—floating—·052 to ·057" (1·32 to 1·44 mm.)	1A4752	11	A/R			
14	Washer—thrust—floating—·058 to ·063" (1·47 to 1·60 mm.)	1A4753	11	A/R			
15	Washer—thrust—floating—·064 to ·069" (1·62 to 1·75 mm.)	1A4754	11	A/R			
16	Trunnion—suspension link	1A4760	12	2			
17	Nut—swivel pin	53K329	13	2			
18	Lubricator—swivel pin—lower	3H3028	14	2			
19	Link—lower—LH front and RH rear	1B4365	15	2			
20	Link—lower—RH front and LH rear	1B4366	16	2			
21	Ring—fulcrum pin (cork)	1G4505	17	4			
22	Pin—fulcrum—lower link	1A4788	18	2			
23	Pin—cotter—fulcrum pin to swivel pin	53K1764	19	2			] Alternatives
24	Pin—cotter—fulcrum pin to swivel pin	53K1770	19	2			
25	Nut—cotter pin	FNZ104	20	2			
26	Washer—spring—nut	LWZ204	21	2			
27	Bush—lower link front end	1G4346	22	2			
28	Bush—lower link rear end	1G4348	23	2			
29	Lubricator—lower link front bush	3H3028	24	2			
30	Washer—lubricator	2K4974	25	2			
31	Pin—cotter—lower link to swivel pin fulcrum	1G4350	26	4			
32	Nut—cotter pin	53K1662	27	4			
33	Lever—steering—RH	1B4475		1			
34	Lever—steering—LH	1B4476	28	1			
	RING - SEALING - DUST EXCLUDER	7RS1519		2		Com(c) 22226	PAU 2071

Item No.	DESCRIPTION	Commencing (C) 101 Part Number	Illus. No.	Quantity	MODIFICATIONS New Part Number	MODIFICATIONS Change Point	REMARKS
	Front Suspension—*continued*						
1	Bolt—lever to swivel axle—3½″ (8·89 cm.)	HBZ0728	29	2			
2	Bolt—lever to swivel axle—3¾″ (9·52 cm.)	HBZ0730	30	2			
3	Washer—lock—bolt	1B4457	31	2			
4	Washer—spring—bolt	LWZ207	32	4			
5	Nut—bolt	FNZ507	33	4			
6	Plate—adaptor—RH	BTC134		1			
7	Plate—adaptor—LH	BTC135	34	1			
8	Screw—plate to swivel axle	ATB7258	35	4			
9	Washer—spring—screw	LWZ206	36	4			
10	**Hub assembly**	**BTC101**	**37**	**2**			**Disc wheels**
11	Stud—wheel	ATC4257	38	10			
12	Stud—disc	BTC103	77	10			Alternatives
13	Nut—wheel stud	1G8075	78	10			
14	Nut—wheel stud	ATB7285	78	10			
15	Nut—disc brake stud	ATB7265	79	10			
16	**Hub assembly—RH**	**BTC108**		1			**Wire wheels**
17	**Hub assembly—LH**	**BTC109**	80	1			
18	Stud—brake disc	BTC103	81	10			
19	Seal—oil	8G554	82	2			
20	Bearing—hub—inner	1B4399	83	2	BTC280		1B4399 not available; use BTC280
21	Distance piece—bearing	1B4527	84	2			
22	Shim—·003″ (·076 mm.)	1B4528	85	A/R			
23	Shim—·005″ (·127 mm.)	1B4529	85	A/R			
24	Shim—·010″ (·254 mm.)	1B4530	85	A/R			
25	Shim—·030″ (·762 mm.)	BTC370	85	A/R			
26	Bearing—hub—outer	1B4400	86	2			
27	Nut—bearing retaining	53K330	87	2			
28	Washer—nut	1B4392	88	2			
29	Cup—grease retaining	ATB4098	89	2			Disc wheels
30	Cup—grease retaining	1B4316	90	2			Wire wheels
31	**Absorber—shock**	**1B4459**	**39**	**2**	**AYH4040**	**Com. (C) 17236 BN7 (wire wheels), 17129 BT7 (wire wheels), 18484 BT7 (disc wheels)**	
32	Bolt—arm	HBZ0620	40	2			
33	Bolt—clamping—arm to shaft	HBZ0616	41	2			
34	Nut—bolt	FNZ106	42	4			
35	Washer—spring—nut	LWZ306	43	4			
36	Pin—fulcrum	1G4349	44	2			
37	Bearing—top link	2A4144	45	4			
38	Nut—fulcrum pin	FNZ407	46	2			

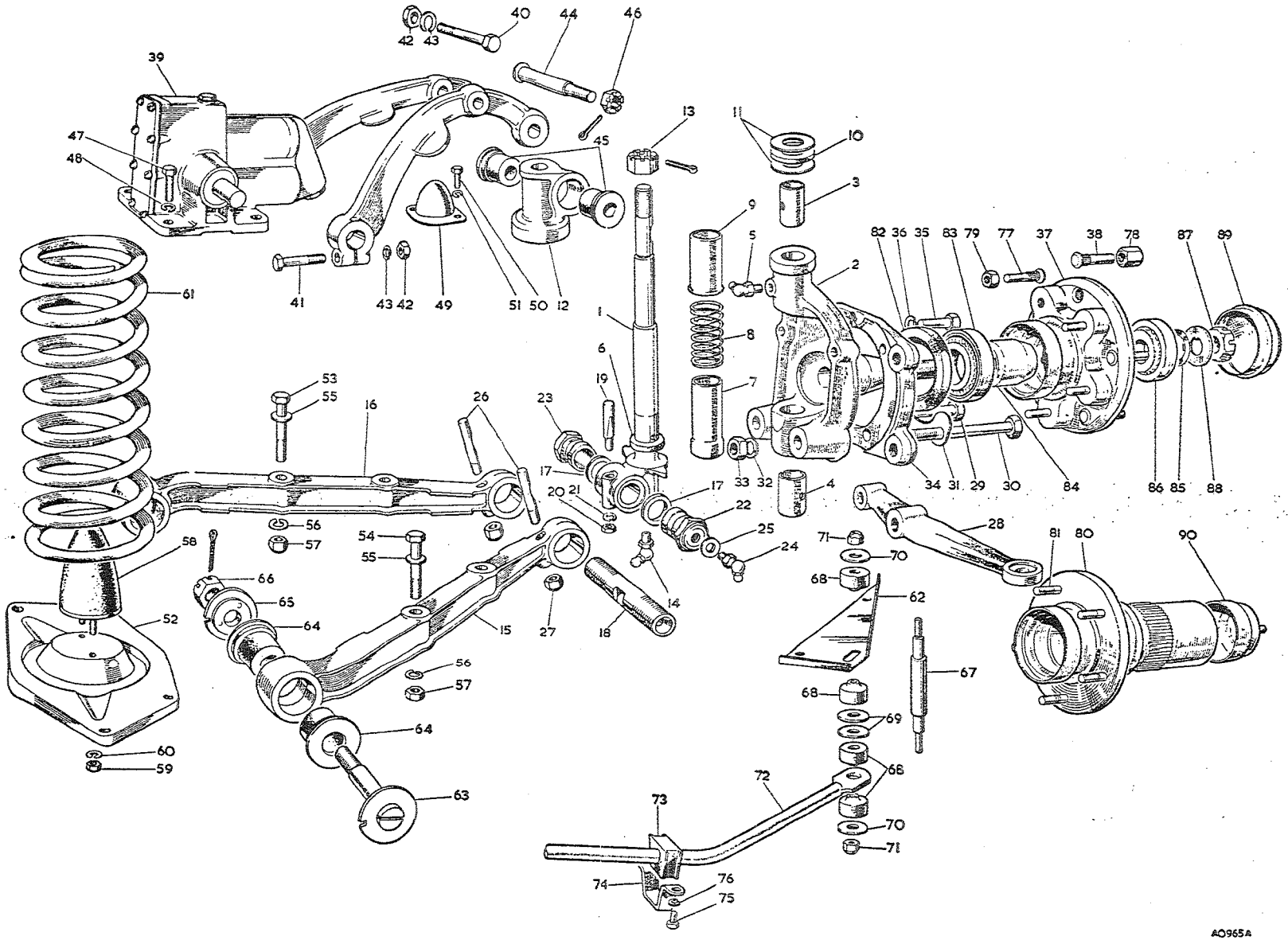

To face page K.2

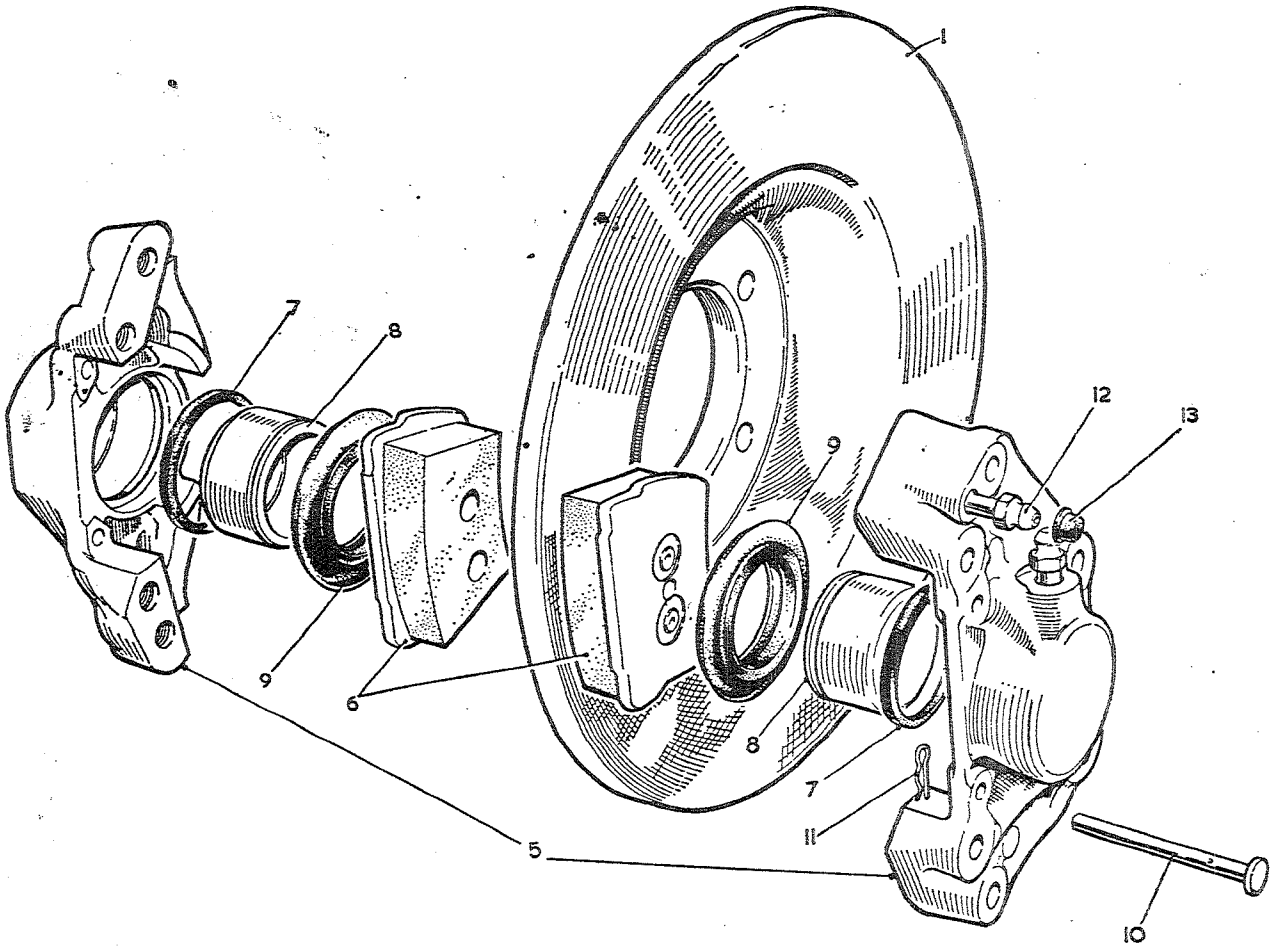

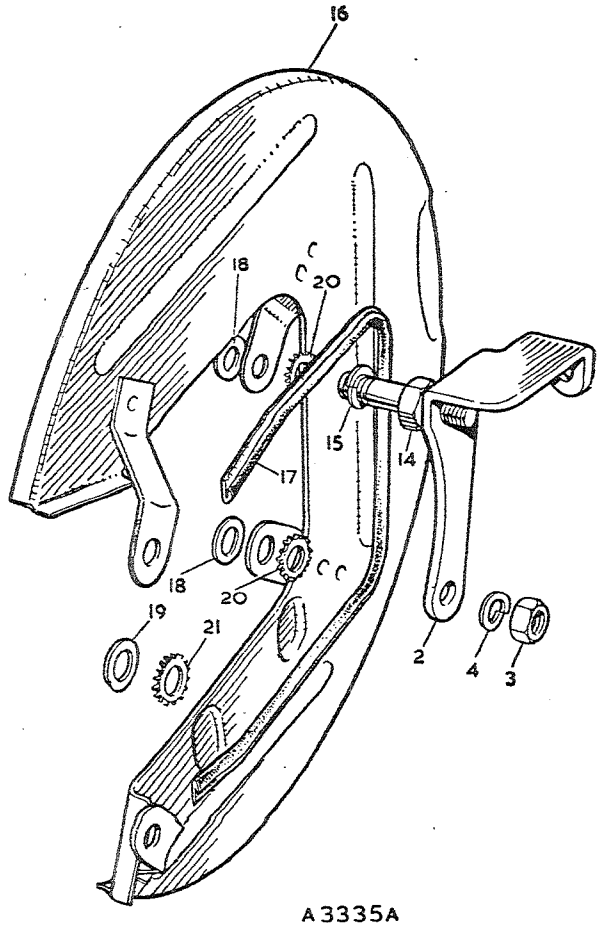

A3335A

To face page K.3

Item No.	DESCRIPTION	Commencing (C) 101 Part Number	Illus. No.	Quantity	MODIFICATIONS New Part Number	MODIFICATIONS Change Point	REMARKS
	Front Suspension—*continued*						
1	Disc—brake	BTC104	1	2			
2	Bracket—brake hose—RH	BTC126	2	1			
3	Bracket—brake hose—LH	BTC127		1			
4	Nut—bracket	FNZ105	3	4			
5	Washer—spring—nut	LWZ305	4	4			
6	**Caliper unit assembly—RH**	**BTC112**		1	**~~BTC172~~**	**Com. (C) 10338 BN7 (disc wheels), 10309 BN7 (wire wheels), 10360 BT7 (disc wheels) 10269 BT7 (wire wheels)**	**BTC112 not available; use ~~BTC172~~**
7	**Caliper unit assembly—LH**	**BTC113**		1	**BTC173**		**BTC113 not available; use BTC173**
8	**Body assembly—RH**	**17H4815**		1			**Not available; use 17H4815**
9	**Body assembly—LH**	**17H4814**		1			**Not available; use 17H4814**
10	**Body—RH**	**17H4681**	5	1			
11	**Body—LH**	**17H4680**		1			
12	Body—inner—RH	NSP		1			
13	Body—inner—LH	NSP		1			
14	Body—outer—RH	NSP		1			
15	Body—outer—LH	NSP		1			
16	Bolt—bridge—inner—$\frac{7}{16}$" (11·11 mm.)	7H4844		4			
17	Bolt—bridge—outer—$\frac{3}{8}$" (9·52 mm.)	17H4636		4			
18	Ring—sealing—transfer	NSP		2			
19	Ring—sealing—cylinder	17H4642	7	4			
20	Piston	17H4679	8	4			
21	**Pad assembly**	**8G8308**	6	1 set	**8G8476**	**Com. (C) 10338 BN7 (disc wheels), 10309 BN7 (wire wheels), 10360 BT7 (disc wheels) 10269 BT7 (wire wheels)**	
22	Pad	17H4644		4			
23	Boot (rubber)	17H4643	9	4			
24	Pin—pad retaining	17H4640	10	4			
25	Clip—pin	17H4639	11	4			
26	Screw—bleed	17H4637	12	2			
27	Cap—bleed screw	7H4419	13	2			

Standard brakes

Item No.	DESCRIPTION	Commencing (C) 101 Part Number	Commencing (C) 101 Illus. No.	Quantity	MODIFICATIONS New Part Number	MODIFICATIONS Change Point	REMARKS
	Front Suspension—*continued*						
1	**Caliper unit assembly—RH**			1	**BTC260**		**Servo-assisted brakes**
2	**Caliper unit assembly—LH**			1	**BTC261**		
3	**Body assembly—RH**			1	**17H4959**		
4	**Body assembly—LH**			1	**17H4958**		
5	Ring—sealing—cylinder			4	17H4642		
6	Piston			4	17H4960		
7	Pad assembly			1 set	8G8660	Com. (C) 15104	
8	Shim—pad			4	BHA4195		
9	Boot (rubber)			4	17H4643		
10	Pin—pad retaining			4	17H4640		
11	Clip—pin			4	17H4639		
12	Screw—bleed			2	17H4637		
13	Cap—bleed screw			2	7H4419		
14	Bolt—caliper to swivel axle	BTC125	14	4			
15	Washer—spring—bolt	LWZ207	15	4			
16	Cover assembly—dust—RH		16	1	BTC204	Com. (C) 9450 BN7 (disc wheels), 9453 BN7 (wire wheels), 9088 BT7 (disc wheels), 9090 BT7 (wire wheels)	See Austin Service Journal A/205
17	Cover assembly—dust—LH			1	BTC205		
18	Seal—dust cover (rubber)		17	2	BTC171		
19	Washer—plain		18	2	PWZ106		
20	Washer—plain		19	2	BTC211		
21	Washer—shakeproof		20	2	LWZ506		
22	Washer—shakeproof		21	6	LWZ507		
23	**Kit—caliper unit repair**	**8G8279**		**1 set**			
24	Ring—sealing—cylinder	17H4642	7	4			
25	Boot (rubber)	17H4643	9	4			
26	Cap—bleed screw	7H4419	13	2			

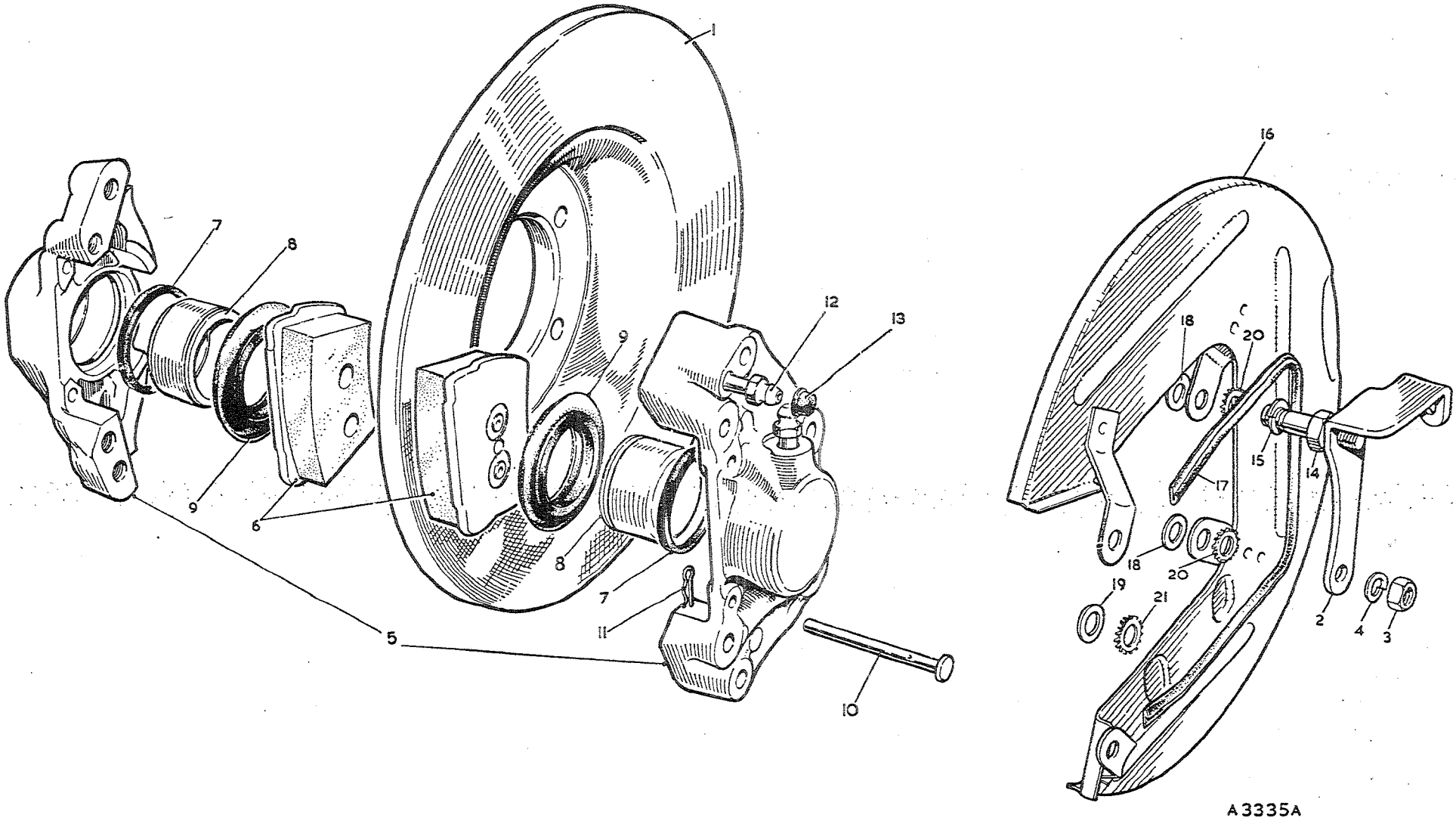

To face page K.4

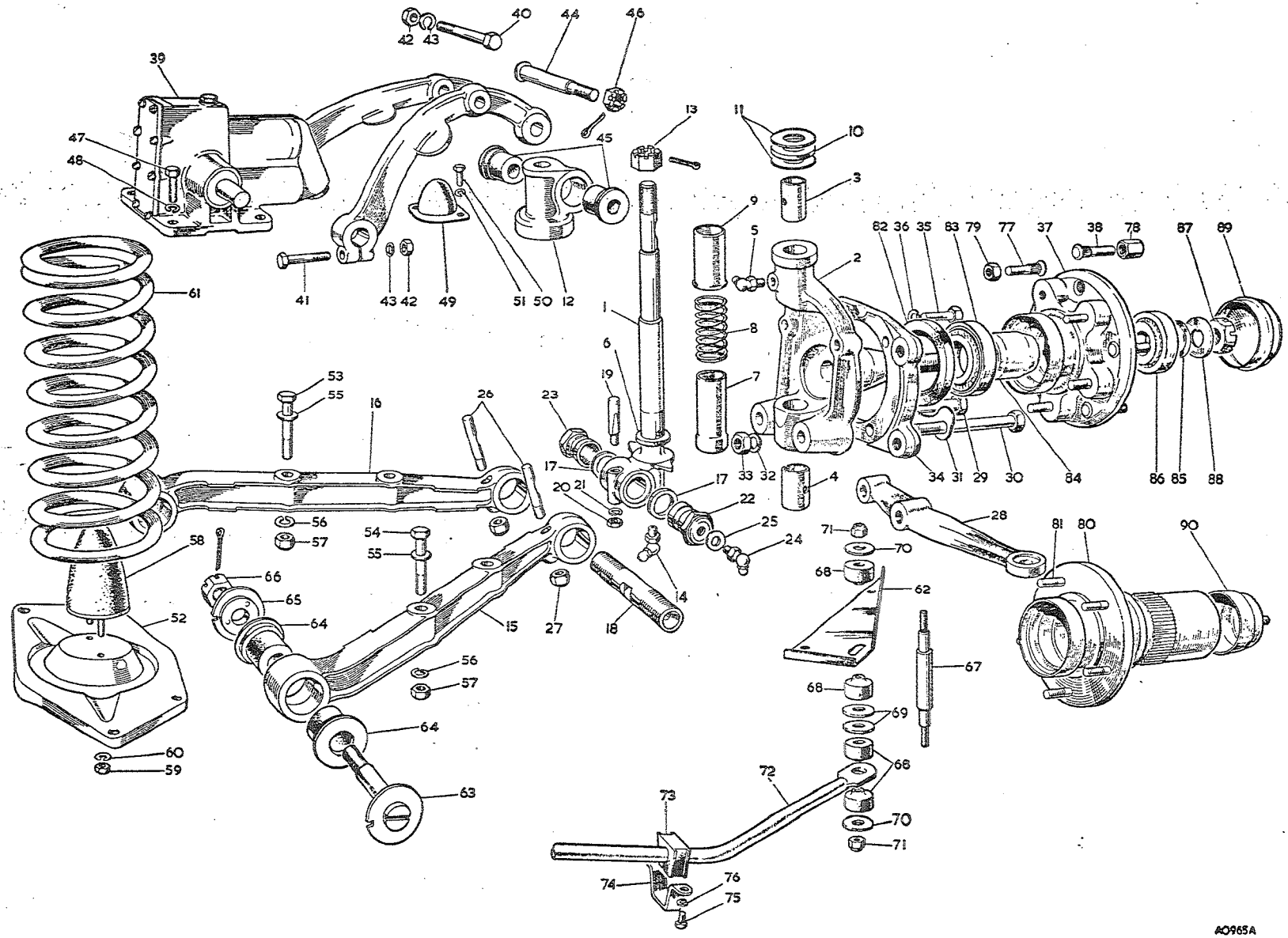

To face page K.5

Item No.	DESCRIPTION	Commencing (C) 101		Quantity	MODIFICATIONS		REMARKS
		Part Number	Illus. No.		New Part Number	Change Point	
	Front Suspension—*continued*						
1	Screw—shock absorber to frame	HZS0608	47	8			
2	Washer—spring—screw	LWZ306	48	8			
3	Buffer—rebound	1G4276	49	2			
4	Screw—rebound buffer to frame	HZS0405	50	4			
5	Washer—spring—screw	LWZ304	51	4			
6	Seat—spring	1G4279	52	2			
7	Bolt—spring seat to lower link	HBZ0618	53	4			
8	Bolt—spring seat and anti-roll plate to lower link	HBZ0620	54	4			
9	Washer—plain—bolt	PWZ106	55	8			
10	Washer—spring—bolt	LWZ306	56	8			
11	Locknut—bolt	LNZ206	57	8			
12	Bumper—front suspension	1B4501	58	2			
13	Nut—suspension bumper to spring seat	FNZ105	59	4			
14	Washer—spring—nut	LWZ205	60	4			
15	Spring—road—coil	1B4569	61	2	AHB8952	Com. (C) 10329 BN7, 10303 BT7	
16	Plate—anti-roll bar—RH	1B7354		1			
17	Plate—anti-roll bar—LH	1B7355	62	1			
18	Pin—fulcrum—lower link	1B4513	63	4			
19	Bearing—lower link	8G622	64	8	ACB9274		8G622 not available; use ACB9274
20	Washer—fulcrum pin	1A4785	65	4			
21	Nut—fulcrum pin	FNZ408	66	4			
22	Link—anti-roll bar	1B4486	67	2			
23	Bush—link	3H3079	68	8			
24	Washer—link bush—top	2K6842	69	4	PWZ207		For 2K6842 use PWZ207 for this application
25	Washer—link bush—bottom	6K9582	70	4			
26	Locknut—link	LNZ305	71	4	LNZ105		LNZ305 not available; use LNZ105
27	Bar—anti-roll	1B4525	72	1			
28	Bearing—anti-roll bar (rubber)	1B4526	73	2			
29	Strap—bearing	1B7356	74	2			
30	Screw—bearing strap	HZS0506	75	4			
31	Washer—spring—screw	LWZ205	76	4			

Item No.	DESCRIPTION	Commencing (C) 101 Part Number	Illus. No.	Quantity	MODIFICATIONS New Part Number	MODIFICATIONS Change Point	REMARKS
	Front Suspension—*continued*						
1	**Kit—swivel pin and bush repair**	**8G4175**		1	**8G4191**	USE HYL 25" (LOCAL KIT)	**For 8G4175 use 8G4191 for this application**
2	Pin—swivel	1G4245	1	2	11H1018		For 1G4345 use 11H1018 for this application
3	Bush—top	1A4744	3	2			
4	Bush—bottom	1A4745	4	2			
5	Ring—swivel pin (cork)	1A4746	6	2			
6	Washer—thrust	1A4751	10	2			
7	Washer—thrust—floating—·052 to ·057" (1·32 to 1·44 mm.)	1A4752	11	4			
8	Washer—thrust—floating—·058 to ·063" (1·47 to 1·60 mm.)	1A4753	11	4			
9	Washer—thrust—floating—·064 to ·069" (1·62 to 1·75 mm.)	1A4754	11	4			
10	Nut—swivel pin	53K329	13	2			
11	Ring—fulcrum pin (cork)	1G505	17	4			
12	Pin—cotter—fulcrum pin to swivel pin	53K1770	19	2			
13	Nut—cotter pin	FNZ104	20	2			
14	Washer—spring—nut	LWZ204	21	2			

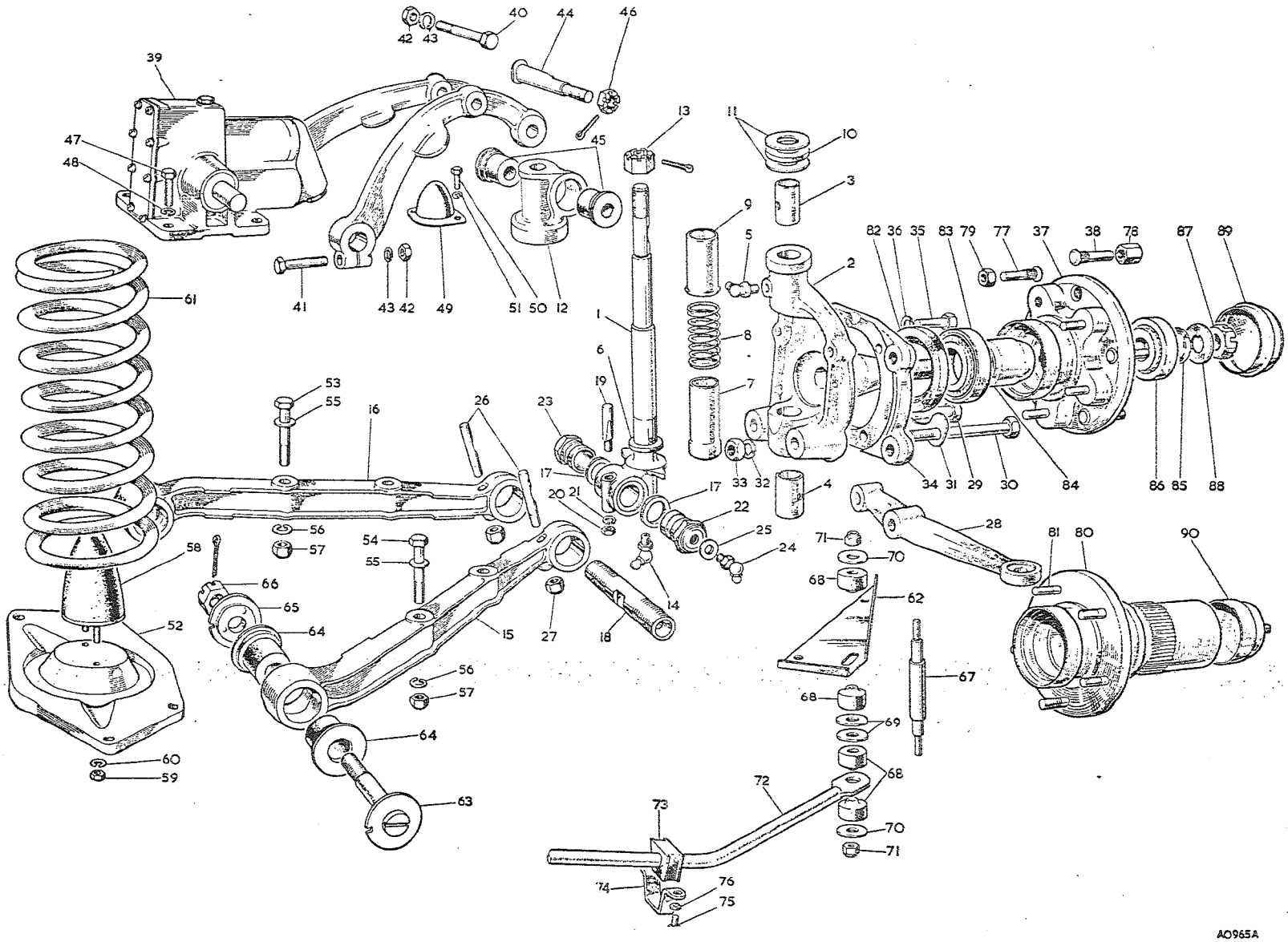

To face page K.6

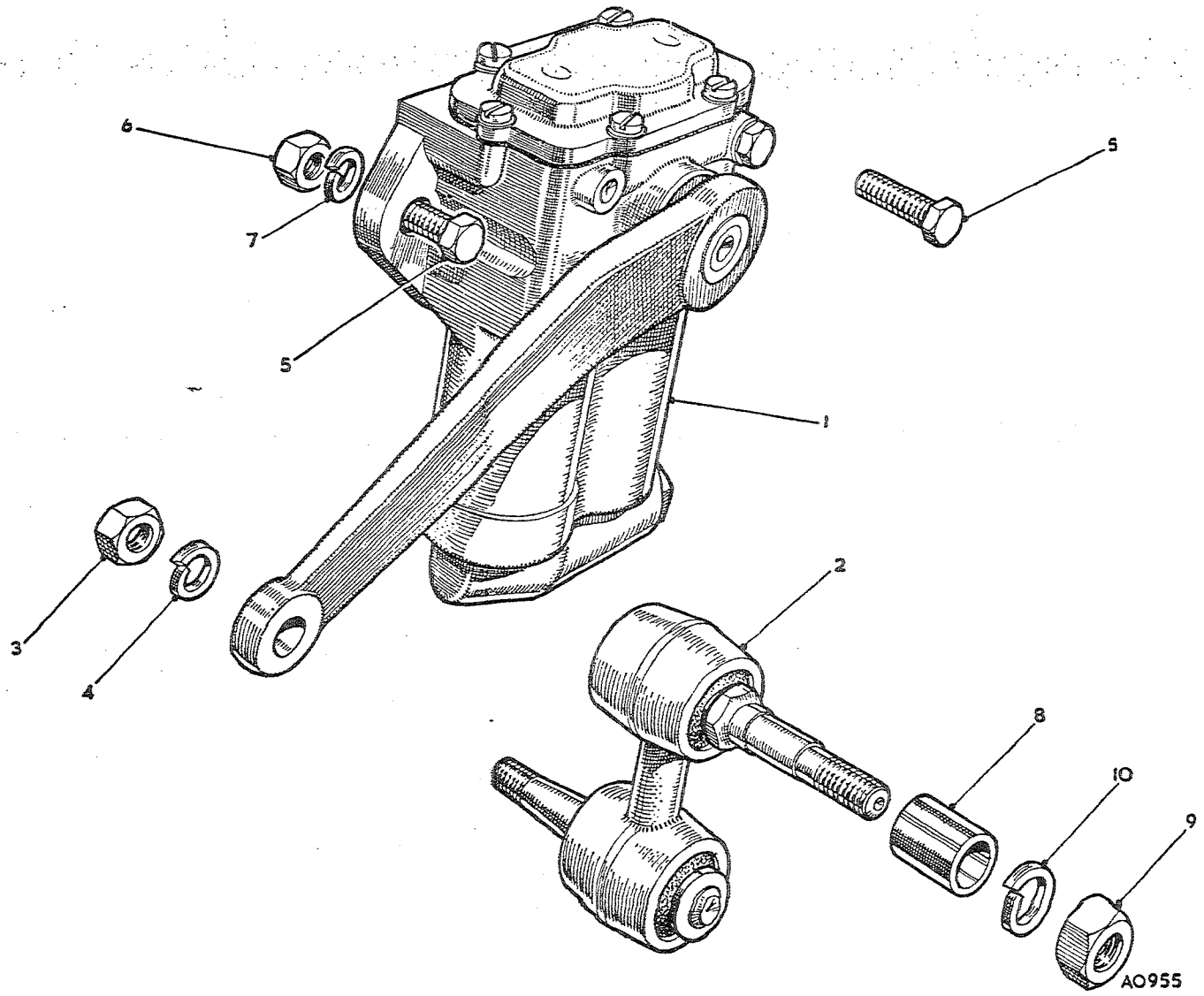

To face page L.1

Item No.	DESCRIPTION	Commencing (C) 101 Part Number	Illus. No.	Quantity	MODIFICATIONS New Part Number	MODIFICATIONS Change Point	REMARKS
	SHOCK ABSORBERS						
1	**Shock absorber—front**	**1B7472**	1	1			**See Section K**
2	**Shock absorber—rear—RH**	**1B7473**		1			
3	**Shock absorber—rear—LH**	1B7463	2	2			
4	Link complete	FNZ106	3	2			
5	Nut—link to arm	LWZ106	4	2			
6	Washer—spring—nut	53K1025	5	4	53K1048	Com. (C) 1736 BN7, 1655 BT7	
7	Bolt—shock absorber to frame	FNZ506	6	4			
8	Nut—bolt			4	PWZ106	Com. (C) 13456	
9	Washer—plain—nut	LWZ106	7	4	LWZ206		LWZ106 not available; use LWZ206
10	Washer—spring—nut	1B7464	8	2			
11	Distance tube—link to axle bracket	FNZ107	9	2			
12	Nut—link pin	LWZ107	10	2	LWZ207		LWZ107 not available; use LWZ207
13	Washer—spring—nut						

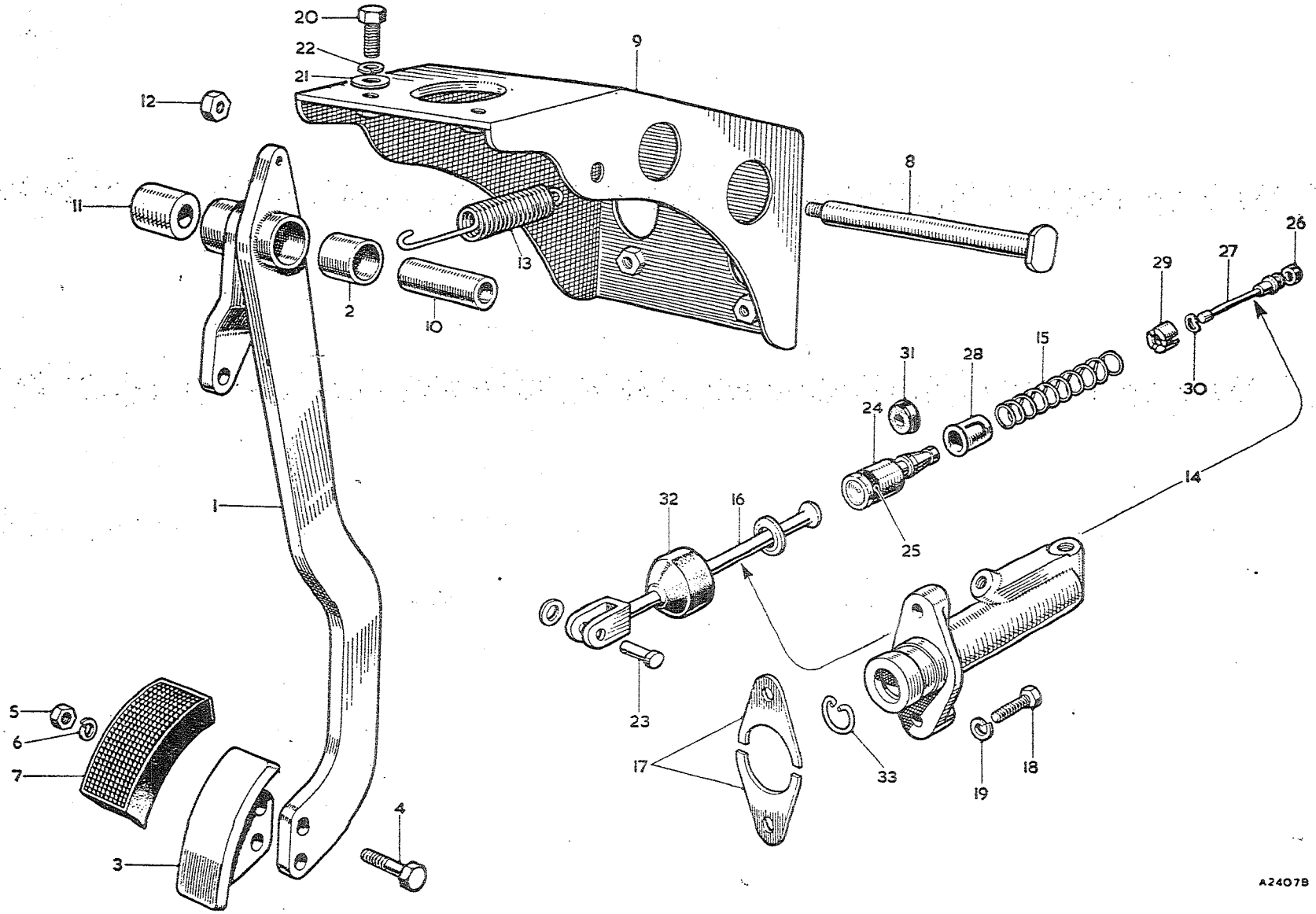

To face page M.1

BRAKE CONTROLS

Item No.	DESCRIPTION	Commencing (C) 101 Part Number	Illus. No.	Quantity	MODIFICATIONS New Part Number	MODIFICATIONS Change Point	REMARKS
1	**Lever—pedal**	**11B5268**	1	1	**AHB9182**	**Com. (C) 16039 BN7, 15881 BT7**	
2	Bush	1G9310	2	2			
3	Pad—pedal	1B8750	3	1	AHB9185	Com. (C) 16039 BN7 15881 BT7	
4	Bolt—pad to lever	HBZ0408	4	2	HBZ0409		
5	Nut—bolt	FNZ104	5	2			
6	Washer—spring—nut	LWZ304	6	2			
7	Rubber—brake pedal	1B8751	7	1			
8	Shaft—brake and clutch pedal	11B5277	8	1			
9	Bracket—brake and clutch pedal lever	11B5273	9	1			
10	Sleeve—brake and clutch pedal shaft	1G9314	10	2			
11	Distance piece	11B5279	11	1			
12	Nut—shaft	LNZ205	12	1			
13	Spring—brake and clutch pedal return	11B5283	13	2			
14	**Master cylinder assembly**	**11B5510**	14	1			
15	Body	NSP		1			
16	Plunger	17H4755	24	1	17H8113		17H4755 not available; use 17H8113 with 17H8112
17	Seal—plunger	7H4976	25	1	17H8112		Use 17H8112 for 7H4976 for this application
18	Spring	7H4944	15	1			
19	Push rod	17H4513	16	1			
20	Seal—valve	17H4561	26	1			
21	Stem—valve	7H4751	27	1			
22	Retainer—spring	17H4827	28	1			
23	Spacer—valve	17H4132	29	1			
24	Washer—spring	7H4752	30	1			
25	Seal—taper end	17H4509	31	1			For use with 17H4755. Not required when 17H8112 fitted
26	Cover—dust	7H4757	32	1			
27	Circlip	7H4451	33	1			
28	**Service kit—master cylinder**	8G8104		1			**Not available; use 8G8807**
29	Seal—plunger	7H4976		1			
30	Seal—valve	17H4561		1			
31	Washer—spring	7H4752		1			
32	Seal—taper end	17H4509		1			
33	Cover—dust	7H4757		1			
34	Circlip	7H4451		1			
35	Tube of grease	NSP		1			

BRAKE CONTROLS

Item No.	DESCRIPTION	Commencing (C) 101 Part Number	Illus. No.	Quantity	MODIFICATIONS New Part Number	MODIFICATIONS Change Point	REMARKS
1	**Lever—pedal**	**11B5268**	1	1	**AHB9182**	**Com. (C) 16039 BN7, 15881 BT7**	
2	Bush	1G9310	2	2			
3	Pad—pedal	1B8750	3	1	AHB9185	Com. (C) 16039 BN7 15881 BT7	
4	Bolt—pad to lever	HBZ0408	4	2	HBZ0409		
5	Nut—bolt	FNZ104	5	2			
6	Washer—spring—nut	LWZ304	6	2			
7	Rubber—brake pedal	1B8751	7	1			
8	Shaft—brake and clutch pedal	11B5277	8	1			
9	Bracket—brake and clutch pedal lever	11B5273	9	1			
10	Sleeve—brake and clutch pedal shaft	1G9314	10	2			
11	Distance piece	11B5279	11	1			
12	Nut—shaft	LNZ205	12	1			
13	Spring—brake and clutch pedal return	11B5283	13	2			
14	**Master cylinder assembly**	**11B5510**	14	1			
15	Body	NSP		1			
16	Plunger	17H4755	24	1	17H8113		17H4755 not available; use 17H8113 with 17H8112
17	Seal—plunger	7H4976	25	1	17H8112		Use 17H8112 for 7H4976 for this application
18	Spring	7H4944	15	1			
19	Push rod	17H4513	16	1			
20	Seal—valve	17H4561	26	1			
21	Stem—valve	7H4751	27	1			
22	Retainer—spring	17H4827	28	1			
23	Spacer—valve	17H4132	29	1			
24	Washer—spring	7H4752	30	1			
25	Seal—taper end	17H4509	31	1			For use with 17H4755. Not required when 17H8112 fitted
26	Cover—dust	7H4757	32	1			
27	Circlip	7H4451	33	1			
28	**Service kit—master cylinder**	8G8104		1			**Not available; use 8G8807**
29	Seal—plunger	7H4976		1			
30	Seal—valve	17H4561		1			
31	Washer—spring	7H4752		1			
32	Seal—taper end	17H4509		1			
33	Cover—dust	7H4757		1			
34	Circlip	7H4451		1			
35	Tube of grease	NSP		1			

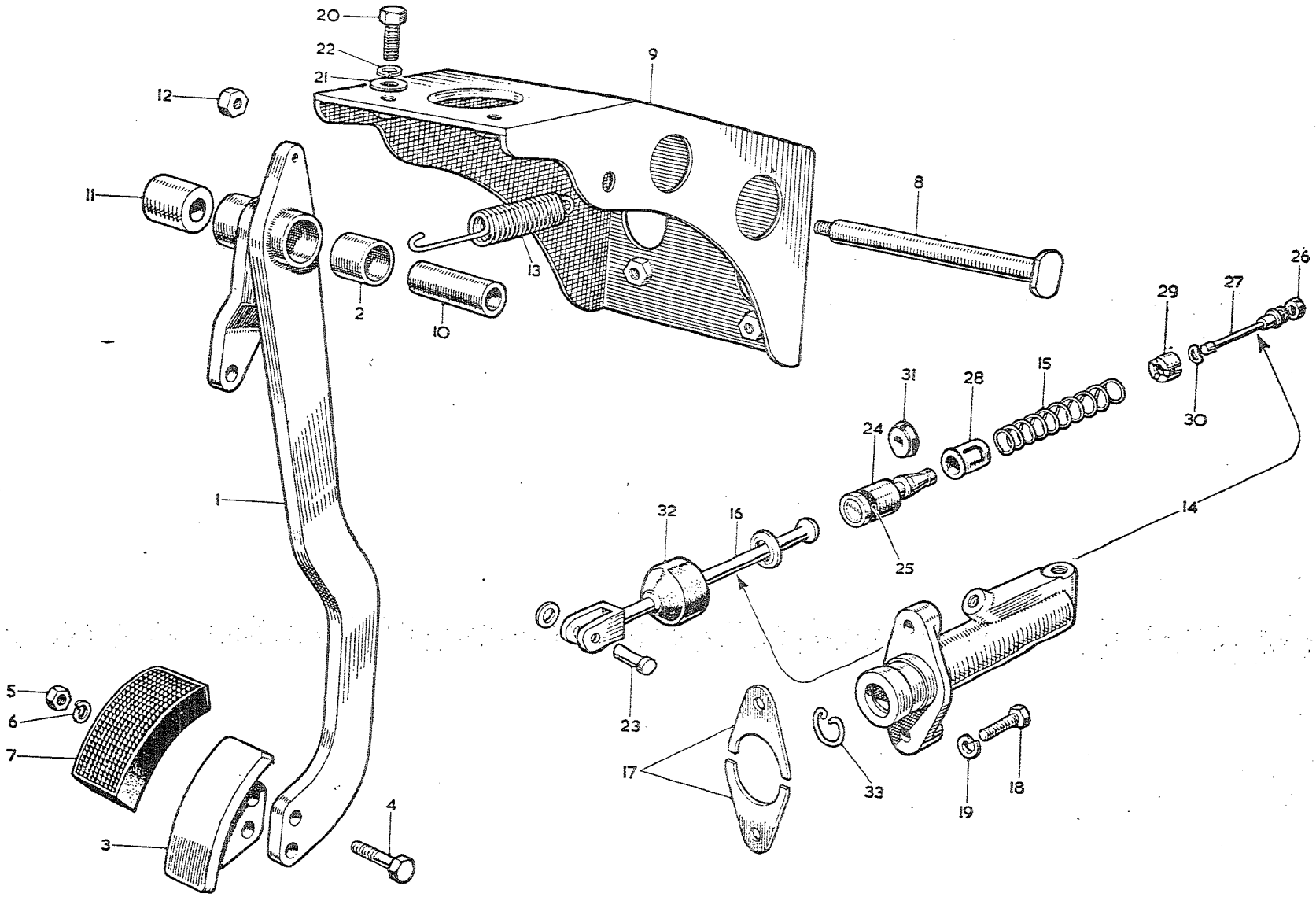

To face page M.2

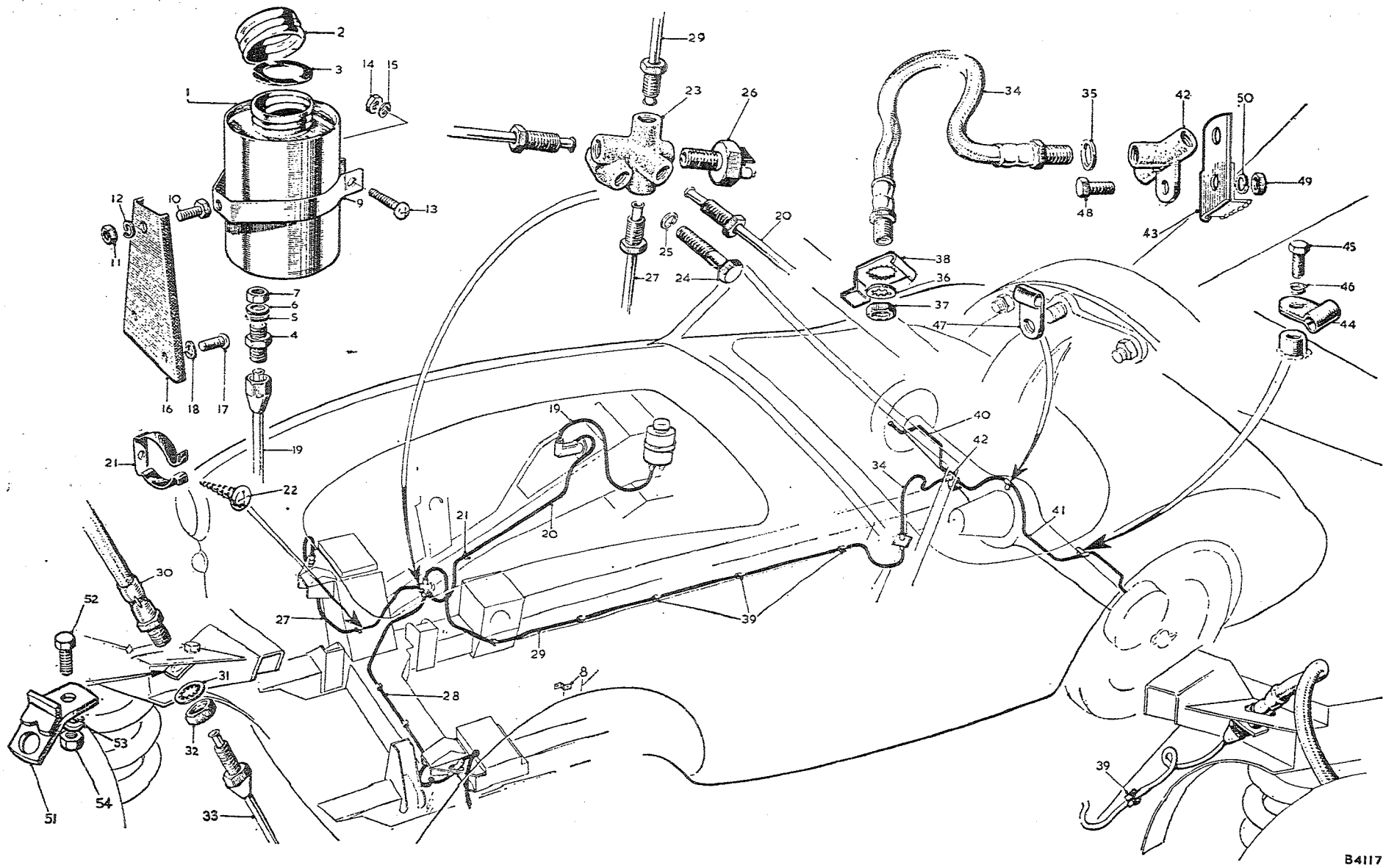

To face page M.3

Item No.	DESCRIPTION		Commencing (C) 101 Part Number	Illus. No.	Quantity	MODIFICATIONS New Part Number	Change Point	REMARKS
	SUPPLY TANK, PIPES AND FITTINGS							
1	**Tank—dual supply**		**ACB5856**	1	1			
2	Cap—filler		7H4379	2	1	17H4508		7H4379 not available; use 17H4508
3	Washer—filler cap		7H4726	3	1			
4	Adaptor	use 64473631 Girling	17H4238	4	2	~~17H4946~~		17H4238 not available; ~~use~~ 17~~H4946~~ PAU 2574
5	Gasket—adaptor		41K5011	5	2			Part No. change; was 17H4180
6	Washer—sealing inner body		17H4528	6	1			
7	Nut—adaptor		7H4867	7	2			
8	Bracket—tank to support channel	LHD	11B5521	8	1	AHB9067	Com. (C) 13751 WSE 11B5521	PAU 2538
9	**Clip assembly**		**13H297**		1			
10	Clip		3H599	9	1			No longer available; use 13H297
11	Screw		PMZ0314	13	1			
12	Nut		FNZ103	14	1			
13	Washer—spring		LWZ203	15	1			
14	Screw—clip to bracket		HZS0404	10	1			
15	Nut—screw		FNZ104	11	1			
16	Washer—spring—screw		LWZ204	12	1			
17	Bracket—tank to pedal bar		11B5522	16	1			
18	Screw—bracket	RHD	HZS0403	17	2			
19	Washer—spring—screw		LWZ204	18	2			
20	Pipe—supply tank to master cylinder		17H4519	19	1			
21	Pipe—supply tank to master cylinder		17H4515		1			
22	Clip—pipe to front wheelarch panel		2H400		1			
23	Bolt—clip	LHD	PMZ0307		1			
24	Nut—bolt		FNZ103		1			
25	Washer—spring—nut		LWZ203		1			
26	Pipe—master cylinder to 5-way connection	RHD	17H4518	20	1			
27	Pipe—master cylinder to 5-way connection	LHD	17H4514		1			
28	Clip—pipe to engine bearer strut	RHD	2H174	21	1			
29	Screw—clip		PTZ1004	22	1			
30	Connection—5-way		1B8926	23	1			
31	Screw—connection to boss		HBZ0410	24	1			
32	Washer—spring—screw		LWZ304	25	1			
33	Switch—stop light		3H1894	26	1			
34	Pipe—5-way connection to RH front hose		17H4556	27	1			
35	Pipe—5-way connection to LH front hose		17H4557	28	1			
36	Pipe—5-way connection to rear hose	BN7	17H4558	29	1			
37	Pipe—5-way connection to rear hose	BT7	17H4666		1			

SERVICE PARTS LIST

Item No.	DESCRIPTION		Commencing (C) 101 Part Number	Illus. No.	Quantity	MODIFICATIONS New Part Number	MODIFICATIONS Change Point	REMARKS
								3
	Supply Tank, Pipes and Fittings—*continued*		**10K5451**	**30**	**2**			**Part No. change; was BHA4138**
1	**Hose—front flexible**		LWN406	31	4			Part No. change; was 2K7131 and LWN606
2	Washer—shakeproof		FNZ206	32	4			
3	Nut		11B5149	51	2			
4	Bracket—brake hose		HZS0406	52	2			
5	Screw—bracket to body		LWZ204	53	2			
6	Washer—spring—screw		FNZ104	54	2			
7	Nut—screw		**BHA4137**	**33**	**2**			
8	**Pipe—hose to caliper**	BN7	**11B5543**	**34**	**1**			
9	**Hose—rear flexible**	BT7	2A7227		1			
10	Pipe—rear flexible		3H2287	35	1			Part No. change; was 2K7131 and LWN606
11	Gasket		LWN406	36	1			
12	Washer—shakeproof		FNZ206	37	1			
13	Nut	BN7	1B8965	38	1			
14	Plate—locking	BT7	1G9622		1			
15	Plate—locking		6K35	39	10			
16	Clip—brake pipes		**17H4559**	**40**	**1**			
17	**Pipe—3-way junction rear to RH brake**	BN7	17H4560	41	1			
18	Pipe—3-way junction rear to LH brake	BT7	17H4665		1			
19	Pipe—3-way junction rear to LH brake		**2A5346**	**42**	**1**			
20	**Connection—3-way**		HZS0506		1			
21	Bolt—3-way connection to axle case	BT7	FNZ105		1			
22	Nut—bolt		LWZ205		1			
23	Washer—spring—nut	BN7	1B7527	43	1			
24	Bracket extension		2K5217	44	1			
25	Clip—LH rear brake pipe to boss on axle		HZS0404	45	1			
26	Screw—clip		LWZ304	46	1			
27	Washer—spring—screw		2K5218	47	1			
28	Clip on gear carrier stud		HZS0506	48	2			
29	Bolt—3-way piece to extension and bracket	BN7	FNZ105	49	2			
30	Nut—bolt		LWZ205	50	2			
31	Washer—spring—nut							

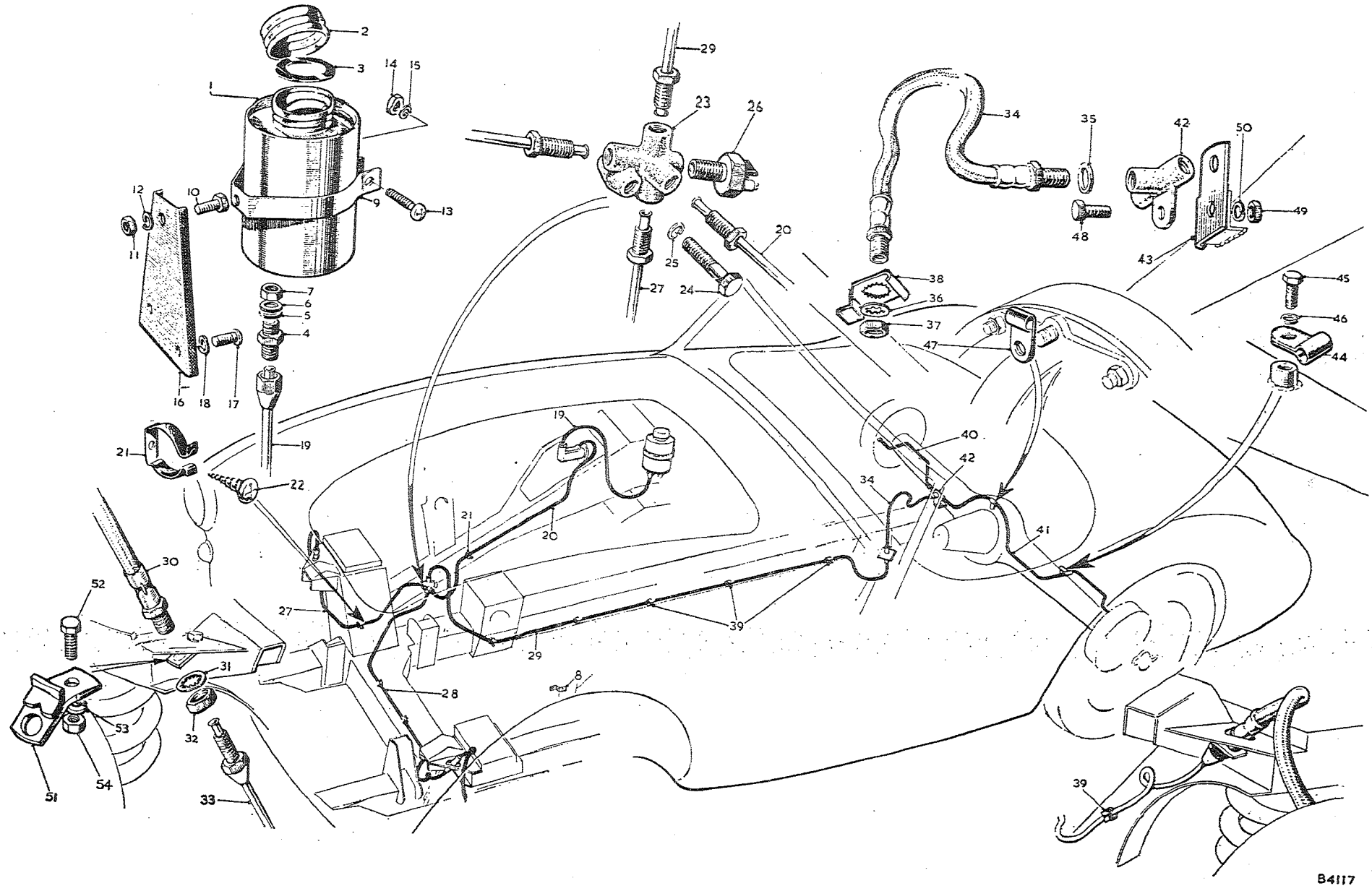

To face page M.4

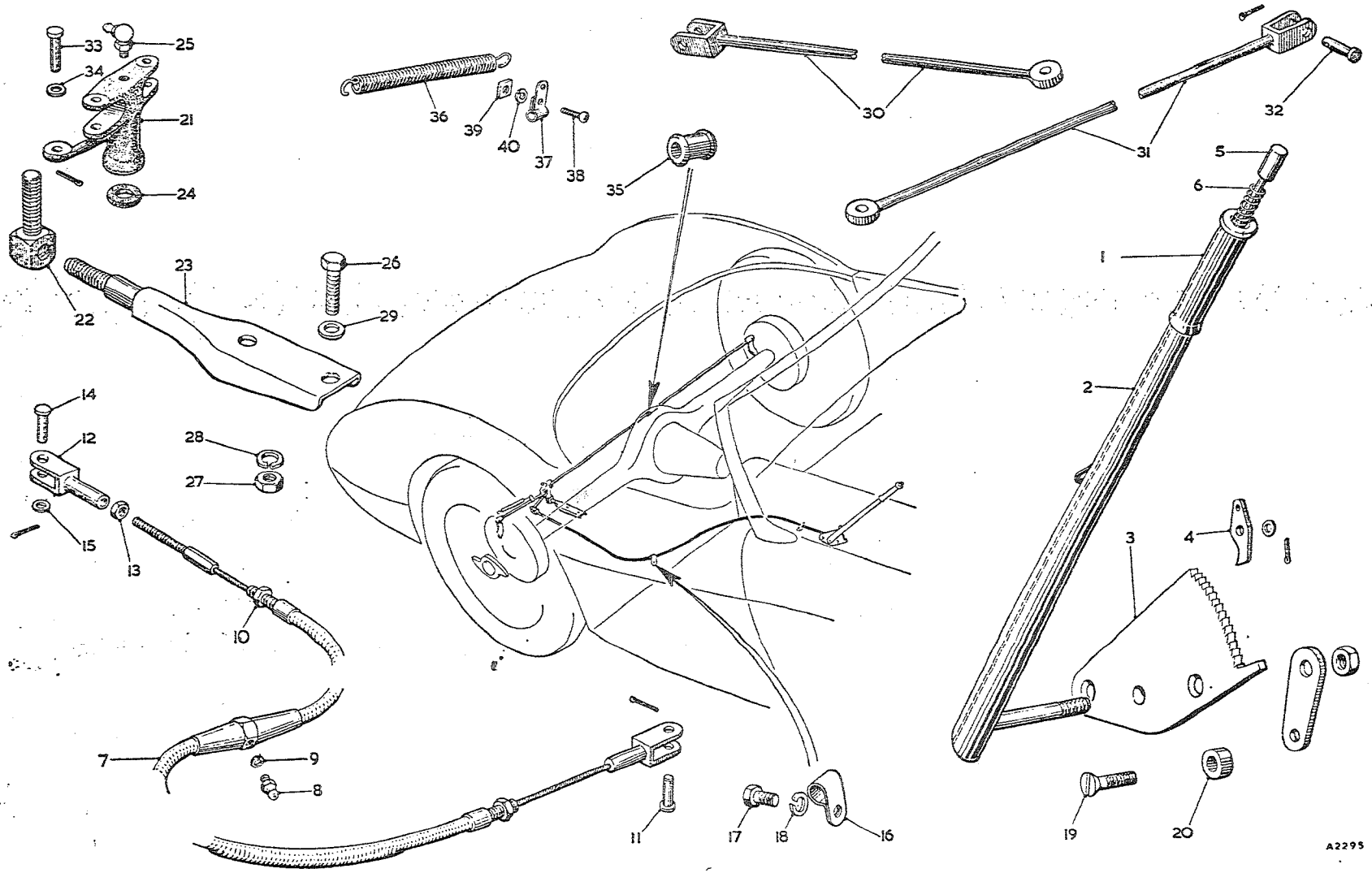

To face page M.5

Item No.	DESCRIPTION	Commencing (C) 101 Part Number	Illus. No.	Quantity	MODIFICATIONS New Part Number	MODIFICATIONS Change Point	REMARKS
	HANDBRAKE MECHANISM						
1	**Handbrake assembly**	**11B5282**	1	1			
2	Lever—handbrake	17H786	2	1			
3	Plate—ratchet	17H787	3	1			
4	Pawl—ratchet	17H788	4	1			
5	Button	17H789	5	1			
6	Spring	17H790	6	1			
7	**Cable—handbrake**	**11B5338**	7	1			
8	Lubricator	UHN305	8	1			
9	Washer—spring—lubricator	LWZ205	9	1			
10	Nut—cable	1B7364	10	2			
11	Pin—joint—cable	2K5616	11	1			
12	Fork end	1B7362	12	1			
13	Locknut—fork end	FNZ204	13	1			
14	Pin—joint—balance lever	2K5221	14	1			
15	Washer—pin	PWZ105	15	1			
16	Clip—handbrake cable at heelboard	1B9074	16	1			
17	Clip—handbrake cable at heelboard	PCR0609		1			] Alternatives
18	Screw—clip to heelboard	HZS0403	17	1			
19	Washer—spring—screw	LWZ204	18	1			
20	Clip—handbrake cable to rear floor			1	PCR0609		
21	Nut] BT7			1	FNZ104	] Com. (C) 10475	
22	Washer—plain			1	PWZ204		
23	Washer—spring			1	LWZ204		
24	Screw—handbrake to frame bracket	1B8895	19	2			
25	Distance piece—handbrake to frame bracket	1B8896	20	2			
26	**Lever—balance**	**1G7485**	21	1			
27	Carrier—balance lever	1G7484	22	1			
28	Support with pin	1B7424	23	1			
29	Ring (felt)	2K5213	24	1			
30	Lubricator	3H2192	25	1	UHN490		3H2192 not available; use UHN490
31	Bolt—support to bracket on axle	HZS0506	26	2			
32	Nut—bolt	FNZ105	27	2			
33	Washer—plain—nut	PWZ105	29	2			
34	Washer—spring—nut	LWZ305	28	2			

Item No.	DESCRIPTION	Commencing (C) 101 Part Number	Illus. No.	Quantity	MODIFICATIONS New Part Number	MODIFICATIONS Change Point	REMARKS
	Handbrake Mechanism—*continued*	ATC7251	30	1			
1	**Cross rod—short—RH**	1G7549	31	1			
2	**Cross rod—long—LH**	2K6930	32	2			
3	Pin—joint—fork end to backplate lever	2K5243	33	2			
4	Pin—joint—cross rod to balance lever	2K5291	34	8			
5	Ring—joint pin (felt)	1B5329	35	1			
6	Ferrule—cross rod steady (rubber)	2H1641	36	2	47H5524		2H1641 not available; use 47H5524
7	Spring—pull-off	1G7574	37	2			
8	Clip—spring	PMZ0306	38	2			
9	Screw—clip	NZS103	39	2			
10	Nut—screw	LWZ203	40	2			
11	Washer—spring—nut						

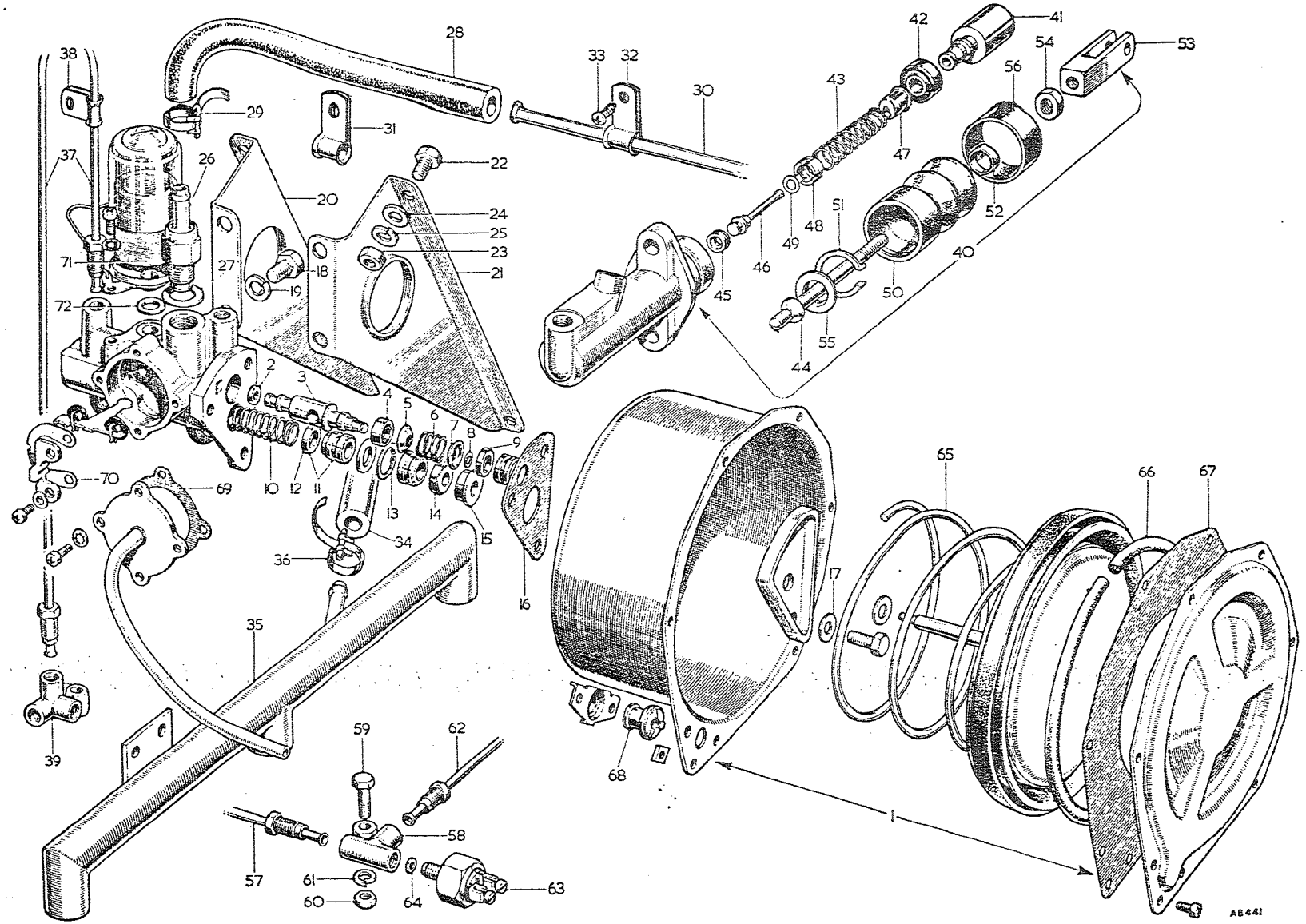

To face page M.7

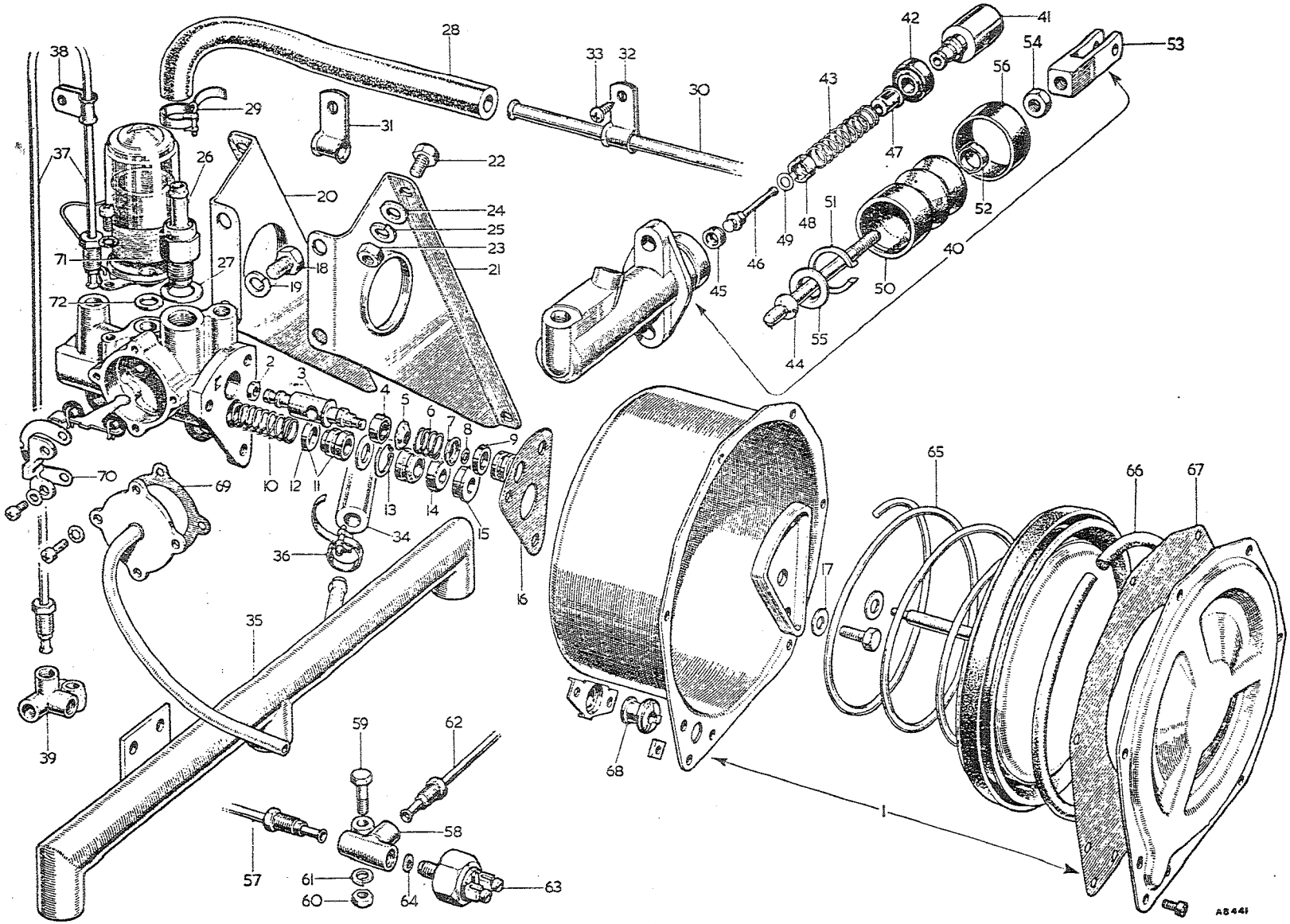

To face page M.7

Item No.	DESCRIPTION	Commencing (C) 15104 Part Number	Illus. No.	Quantity	MODIFICATIONS New Part Number	Change Point	REMARKS
	SERVO SYSTEM						
1	**Servo unit—vacuum**	**AHB9109**	1	1	13H1573	(SEE ALSO AUSTIN 1800)	FAU 2525
2	Seal—valve operating piston—small	7H6964	2	1			
3	Piston—valve operating	7H6966	3	1			
4	Seal—valve operating piston—large	7H6965	4	1			
5	Abutment—valve operating piston spring	7H6961	5	1			
6	Spring—valve operating piston return	7H6967	6	1			
7	Retainer—return spring	7H6962	7	1			
8	Circlip—return spring retainer	7H6959	8	1			
9	Seal—plug—valve operating piston cylinder	17H4914	9	1			
10	Spring—hydraulic piston return	17H4930	10	1			
11	Piston assembly—hydraulic	17H4937	11	1			
12	Seal—taper—hydraulic piston	17H4509	12	1			
13	Circlip—sealing spacer retaining	17H4952	13	1			
14	Seal—gland—vacuum cylinder piston	17H4908	14	1			
15	Bush—vacuum cylinder piston guide	7H6960	15	1			
16	Gasket—vacuum cylinder to body	17H4913	16	1			
17	Washer—bolt—vacuum cylinder to body (copper)	17H4910	17	3			
18	Spring—vacuum cylinder piston return	17H4929	65	1			
19	**Piston and plate and rod assembly—vacuum cylinder**	**NSP**		1			
20	Seal—locking plate	7H6958	66	1			
21	Gasket—vacuum cylinder end cover	7H6963	67	1			
22	Sleeve—vacuum pipe to cylinder (rubber)	17H4917	68	1			
23	Gasket—vacuum pipe to body	17H4951	69	1			
24	Spring—control valve return	17H4931	70	1			
25	**Filter assembly—air**	**NSP**		1			
26	Element	17H4950	71	1			
27	Washer—sealing—filter to body (rubber)	17H4915	72	1			
28	**Kit—servo unit repair** Use SP2153 Girling	**8G8703**		1	NSE 8G8911		2
29	Seal—valve operating piston—small	7H6964		1			
30	Seal—valve operating piston—large	7H6965		1			
31	Seal—plug—valve operating piston cylinder	17H4914		1			
32	Piston assembly—hydraulic	17H4937		1			
33	Seal—taper—hydraulic piston	17H4509		1			
34	Circlip—sealing spacer retaining	17H4952		1			
35	Seal—gland—vacuum cylinder piston	17H4908		1			
36	Gasket—vacuum cylinder to body	17H4913		1			
37	Washer—bolt—vacuum cylinder to body (copper)	17H4910		3			
38	Seal—locking plate	7H6958		1			
39	Gasket—vacuum cylinder end cover	7H6963		1			
40	Sleeve—vacuum pipe to cylinder (rubber)	17H4917		1			
41	Gasket—vacuum pipe to body	17H4951		1			
42	Element	17H4950		1			Included part of 8G8703 only.

Item No.	DESCRIPTION	Commencing (C) 15104 Part Number	Illus. No.	Quantity	MODIFICATIONS New Part Number	MODIFICATIONS Change Point	REMARKS
	Servo system—*continued*						
1	Screw—servo unit to mounting bracket	HZS0606	18	3			
2	Washer—spring—screw	LWZ206	19	3			
3	**Bracket—servo unit mounting—RH**	**AHB9118**	20	1			
4	**Bracket—servo unit mounting—LH**	**AHB9117**	21	1			
5	Screw—bracket to pedal box	HZS0506	22	4			
6	Nut—screw	FNZ105	23	4			
7	Washer—plain—screw	PWZ205	24	4			
8	Washer—spring—screw	LWZ205	25	4			
9	**Valve—non-return—fitted to servo unit**	**AHB9119**	26	1			
10	Gasket—valve to servo unit	11K8309	27	1			
11	**Hose—valve to vacuum pipe**	**AHB9120**	28	1			
12	Clip—hose	ACB5521 NSS	29	2	21K8341		Part No. change; was 800146, AAA4627, 21K8341
13	**Pipe—vacuum**	**AHB9112**	30	1			
14	Clip—pipe to pedal box top	PCR0607	31	1			
15	Clip—pipe to dash panel	PCR0607	32	1			
16	Screw—clip to dash panel	PTZ1004	33	1			
17	**Hose—vacuum pipe to balance pipe**	**AHB9120**	34	1			
18	**Pipe—balance**	**AEC2122**	35	1			
19	Clip—hose	ACB5521 NSS	36	2	21K8341		Part No. change; was 800146, AAA4627, 21K8341
20	Pipe—servo unit to 4-way connection	AHB9113	37	1			
21	Clip—pipe	PCR0307	38	1			
22	**Connection—4-way**	**17H4141**	39	1			
23	**Master cylinder assembly—brake**	**AHB9110**	40	1	21H4777		
24	Body	NSP		1			
25	Plunger	17H4899	41	1			
26	Seal—plunger	17H4900	42	1			
27	Spring	17H4898	43	1			
28	Push-rod	17H4897	44	1			
29	Seal—valve	17H4561	45	1			
30	Stem—valve	7H4751	46	1			
31	Retainer—spring	17H4827	47	1			
32	Spacer—valve	17H4132	48	1			
33	Washer—spring	7H4752	49	1			
34	Cover—dust	17H4596	50	1			
35	Circlip	17H4602	51	1			
36	Clip—dust cover	17H4597	52	1			
37	Fork end	17H4896	53	1			
38	Locknut	FNZ205	54	1			
39	Washer—retaining	17H4601	55	1			
40	Band—retaining	17H4603	56	1			

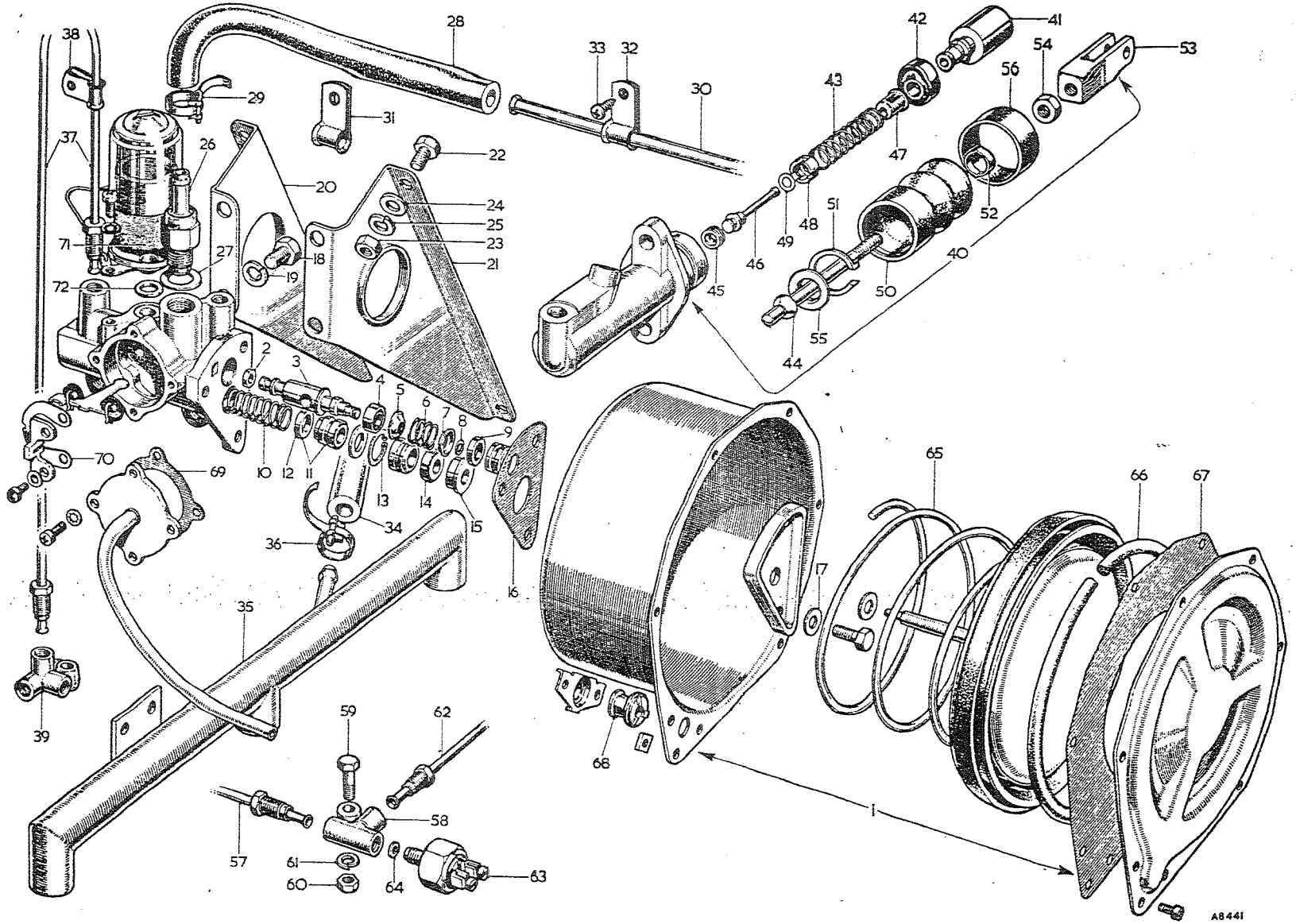

To face page M.8

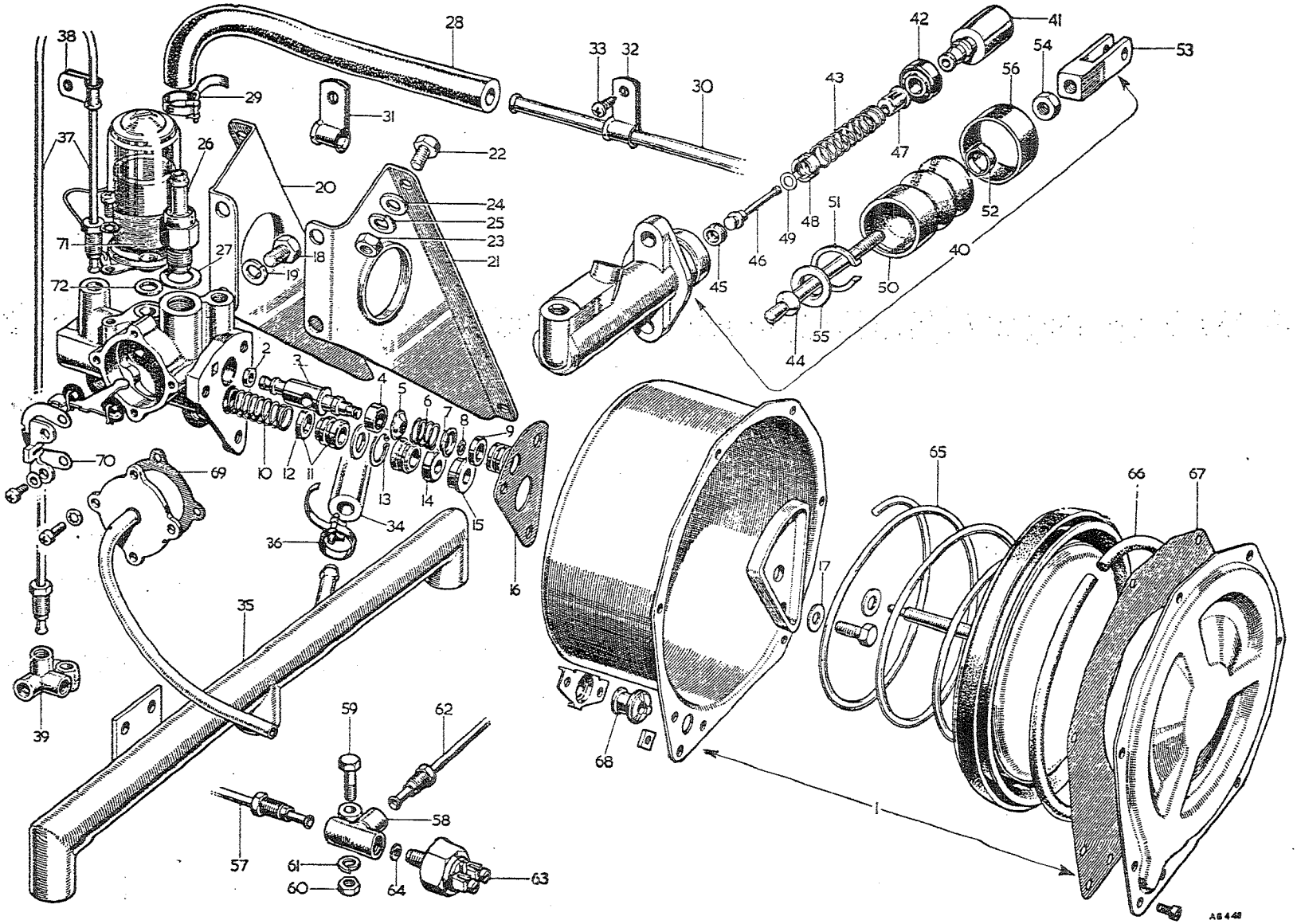

To face page M.9

Item No.	DESCRIPTION	Commencing (C) 15104 Part Number	Illus. No.	Quantity	MODIFICATIONS New Part Number	MODIFICATIONS Change Point	REMARKS
	Servo system—*continued*						
* 1	**Kit—master cylinder repair**	8G8648		1			
2	Seal—plunger			1			
3	Seal—valve			1			
4	Washer—spring			1			
5	Cover—dust			1			
6	Circlip			1			
7	Band—retaining			1			
8	Pipe—master cylinder to 3-way connection **RHD**	13H1596	57	1			Part No. change; was AHB9121
9	Pipe—master cylinder to 3-way connection **LHD**	AHB9111		1			
10	Connection—3-way	ATB7289	58	1	BTB657		ATB7289 not available; use BTB657
11	Bolt—3-way connection to wheelarch	HBZ0410	59	1			
12	Nut—bolt	FNZ104	60	1			
13	Washer—spring—bolt	LWZ304	61	1			
14	Pipe—3-way connection to servo unit	11B5760	62	1			
15	Switch—stop light	2A5304	63	1			
16	Gasket—switch to 3-way connection	BMK424	64	1	3H2429		BMK424 not available; use 3H2429. 3H2429 part No. change; was 3H2287
*	Spring	17K4898		1			included part of 18G 8011

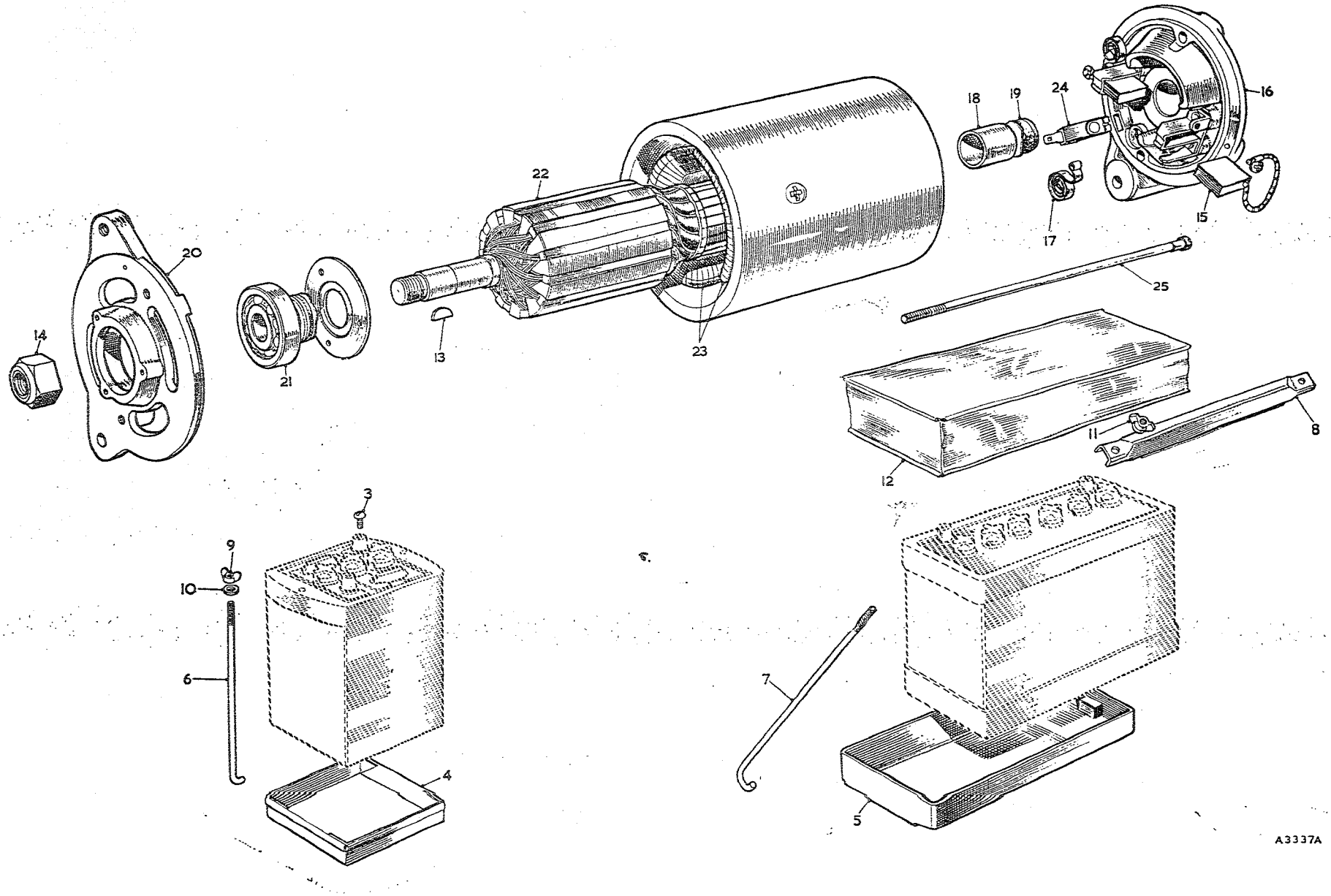

To face page N.1

Item No.	DESCRIPTION		Commencing (C) 101 Part Number	Illus. No.	Quantity	MODIFICATIONS New Part Number	MODIFICATIONS Change Point	REMARKS
	ELECTRICAL EQUIPMENT							
	BATTERY							
1	Battery		NSP		1			
2	Screw—battery lug		2K8645	3	4			2 off required for BN7
3	Tray—battery	BN7	24B747	4	2			
4	Tray—battery	BT7	14G1702	5	1			
5	Rod—battery fixing	BN7	24B811	6	4	AHB8951	Com. (C) 8222	24B811 not available; use AHB8951
6	Rod—battery fixing	BT7	AHB8385	7	2			
7	Bar—battery fixing		14G5509	8	1			
8	Nut—wing—rod	BN7	WNZ104	9	4			
9	Washer—plain—nut		PWZ105	10	4			
10	Nut—wing—rod	BT7	WNZ104	11	2			
11	Cover—battery		14B8816	12	1			
	DYNAMO							
12	**Dynamo**		**AEJ22**		1			
13	Key—pulley		WKN405	13	1			
14	Nut—pulley		LNZ206	14	1			
15	Brush		47H5413	15	1 set	17H2472		47H5413 not available; use 17H2472
16	**Bracket—commutator end**		**47H5414**	16	1			
17	Spring—brush tension		47H5415	17	1 set			
18	Bush—commutator end		17H5434	18	1			
19	Oiler		37H5487	19	1			
20	Bracket—drive end		7H5525	20	1			
21	Bearing—drive end		7H5021	21	1			
22	Armature		47H5416	22	1			
23	Field coils		7H5025	23	1 set			
24	Terminal		47H5392	24	1			
25	Bolt—bracket		27H5534	25	2			
26	Sundry parts		7H5528		1 set			

Item No.	DESCRIPTION	Commencing (E) 29D-H101 Part Number	Illus. No.	Quantity	MODIFICATIONS New Part Number	MODIFICATIONS Change Point	REMARKS
						REF MUST BE MADE TO SUFFIX OF LUCAS NUMBER FOR CORRECT	(PAU 2584)
	STARTER					SPRING - BRUSH TENSION 'A' or 'B'	
1	**Starter**	**3H1281**		1	**13H837**		**3H1281 not available; use 13H837**
2	Brush	7H5002	1	2 sets			
3	Band—cover	7H5000	2	1	57H5344	COM (E) 29F-H 3336	(PAU 2093)
4	**Pinion and barrel**	**7H5008**	3	1			
5	Spring—pinion—return	7H5009	4	1			
6	Spring—pinion—main	7H5007	5	1			
7	Nut	7H5006	6	1			
8	Cap—shaft	7H5001	7	1			
9	**Bracket—commutator end**	**7H5498**	8	1			
10	Bush—commutator end	7H5004	9	1			
11	* Spring—brush tension [A]	7H5005	10	1 set	*		
12	**Bracket—drive end**	**7H5010**	11	1			
13	Bush—drive end	7H5011	12	1			
14	Armature	7H5012	13	1			
15	Coils—field	7H5013	14	1 set			
16	Bolt—bracket	7H5339	15	2			
17	Sundry parts	7H5156		1 set			
18	Bolt—starter to engine	HBZ0615	16	2			
19	Nut—bolt	FNZ106	17	2			
20	Washer—spring—bolt	LWZ206	18	2			
11A	* SPRING - BRUSH TENSION 'B'	~~7H5002~~		*	2742291		

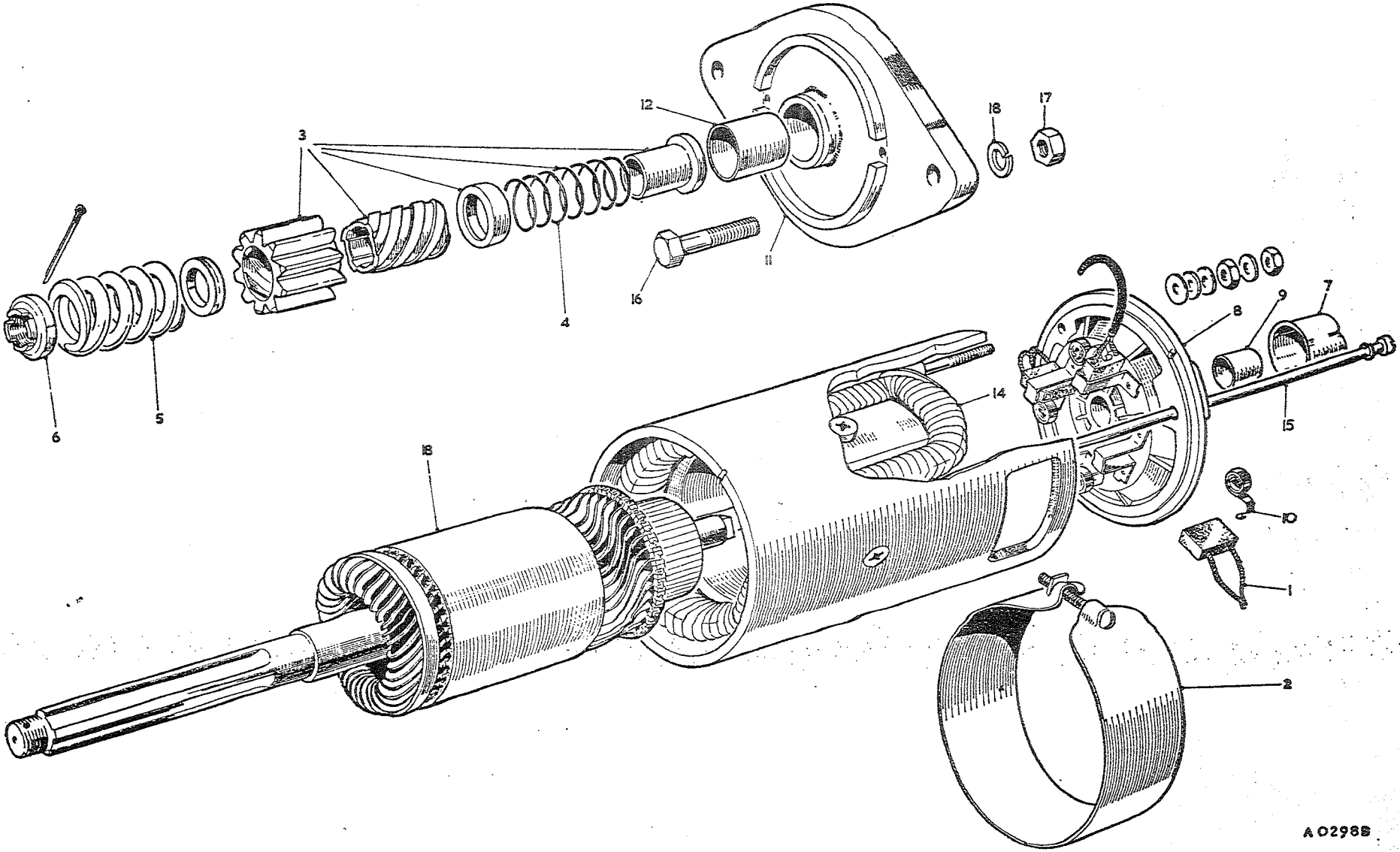

To face page N.2

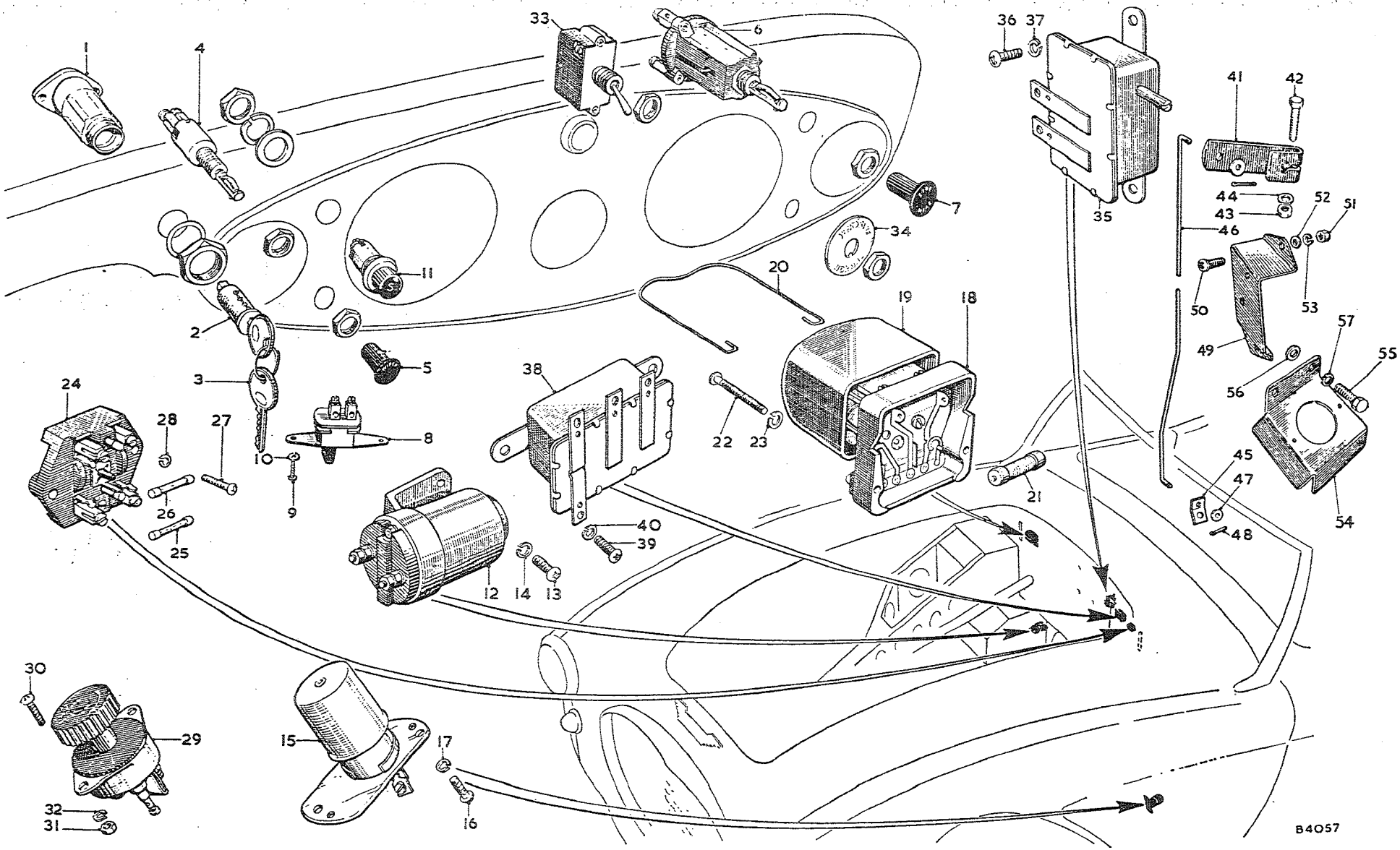
1
4
33
6
36 37
41
42
7
34
35
44
43
46
52
51
11
20
19
18
50
53
2
5
3
38
57
49
55
56
24
28
27
8
22 23
10
9
21
45
47
26
25
40
39
48
54
12 14 13
30
29
15
17
32
31
16
B4057

Item No.	DESCRIPTION	Commencing (C) 101 Part Number	Illus. No.	Quantity	MODIFICATIONS New Part Number	MODIFICATIONS Change Point	REMARKS
	SWITCHES						
1	**Switch—ignition (with lock and key)**	**3H2824**	1	1			
2	Switch—ignition	3H2825		1			**Not available; use 3H2825**
3	**Lock and key**	**7H9830**	2	1	**2H4185**		**7H9830 not available; use 2H4185**
4	Key	ANK4646	3	1			
5	**Switch—windscreen wiper**	**3H3095**	4	1	**27H5278**		**3H3095 not available; use 27H5378**
6	Knob	3H3096	5	1			
7	**Switch—head and sidelamp**	**3H3098**	6	1			
8	Knob	3H3099	7	1			
9	**Switch—panel light**	**3H3100**	8	1			
10	Screw—switch to fascia	AJD1703N	9	2			
11	Washer—spring—screw	LWZ302	10	2			Part No. change; was 6K9588
12	**Switch—starter solenoid push**	**3H3058**	11	1			
13	**Switch—starter solenoid**	**3H852**	12	1	**BCA4501**		**3H852 not available; use BCA4501**
14	Bootee—terminal insulating	8G548		1			
15	Screw—switch to body	PMZ0306	13	2			
16	Washer—spring—screw	LWZ203	14	2			
17	**Switch—dipper**	**11G2007**	15	1			
18	Screw—switch to bracket	PMZ0306	16	2			
19	Washer—spring—screw	LWZ203	17	2			
20	Bracket—dipper switch	1A1880	49	1			
21	Screw—bracket	PMZ0410	50	2			
22	Nut—screw	FNZ104	51	2			
23	Washer—plain—screw	PWZ104	52	2			
24	Washer—spring—screw	LWZ204	53	2			
25	**Box—control**	**3H1836**	18	1	37516		PF 5822
26	Cover	7H5522	19	1			
27	Clip—cover	7H5128	20	1			
28	Resistance—63 ohms (carbon type)	7H5066	21	1			
29	Resistance—60 ohms (wire wound)	47H5589		1			**See Austin Service Journal A/326**
30	Screw—control box to dash	PMZ0320	22	2			
31	Washer—spring—screw	LWZ203	23	2			
32	**Box—fuse**	**3H1910**	24	1			
33	Fuse—35 amp.	7H5067	25	2			
34	Fuse—50 amp.	7H5540	26	2			
35	Screw—fuse box to dash	PMZ0307	27	2			
36	Washer—spring—screw	LWZ203	28	2			
37	**Switch—battery master**	**1B2804**	29	1			
38	Screw—battery master switch to bracket	PMZ0207	30	2			
39	Nut—screw	CNZ102	31	2			
40	Washer—spring—nut	LWZ302	32	2			

Item No.	DESCRIPTION	Commencing (C) 101 Part Number	Commencing (C) 101 Illus. No.	Quantity	MODIFICATIONS New Part Number	MODIFICATIONS Change Point	REMARKS
	Switches—*continued*						
1	Bracket—battery master switch	14B6895	54	1			
2	Screw—bracket to body	HZS0404	55	2			
3	Washer—plain—screw	PWZ104	56	2			
4	Washer—spring—screw	LWZ204	57	2			
5	**Switch—overdrive**	**1B9030**	**33**	1			**For use when overdrive is fitted**
6	Escutcheon plate—overdrive switch	1B9031	34	1			
7	**Switch—throttle**	**1B2837**	**35**	1			
8	Screw—throttle switch to dash	PMZ0308	36	2			
9	Washer—spring—screw	LWZ203	37	2			
10	**Relay—overdrive**	**1B2836**	**38**	1			
11	Screw—relay to dash	PMZ0308	39	2			
12	Washer—spring—screw	LWZ203	40	2			
13	Lever—throttle switch—top	11B2163	41	1			
14	Bolt—lever to throttle switch	53K129	42	1			
15	Nut—bolt	FNZ103	43	1			
16	Washer—plain—nut	PWZ103	44	2			
17	Eye—throttle switch link	1B2721	45	1			
18	Link—throttle switch	11B2351	46	1	AHB9053	Com. (C) 13751	
19	Washer—plain—link	PWZ102	47	2			
20	Split pin—link	2K1381	48	2			

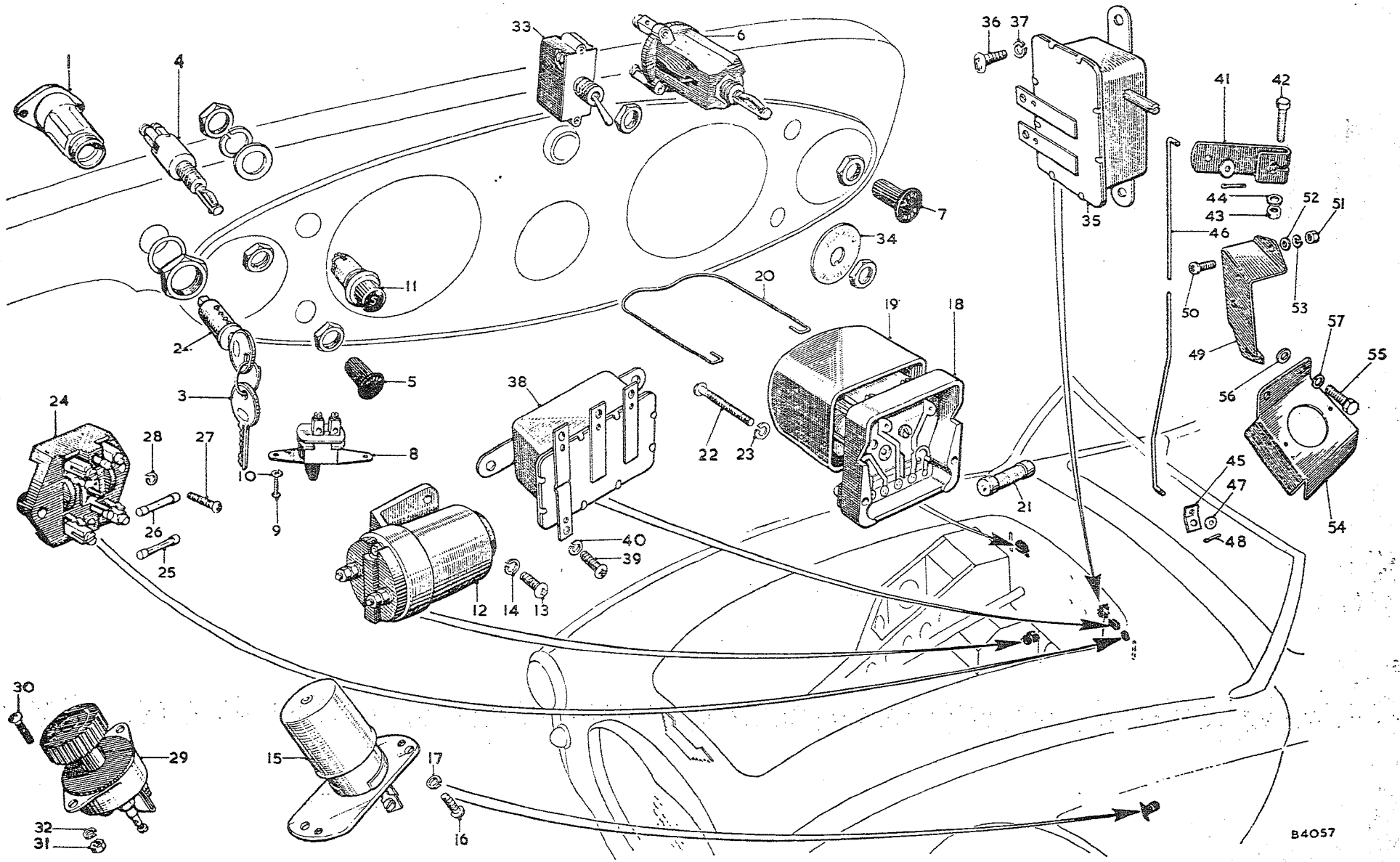

To face page N.4

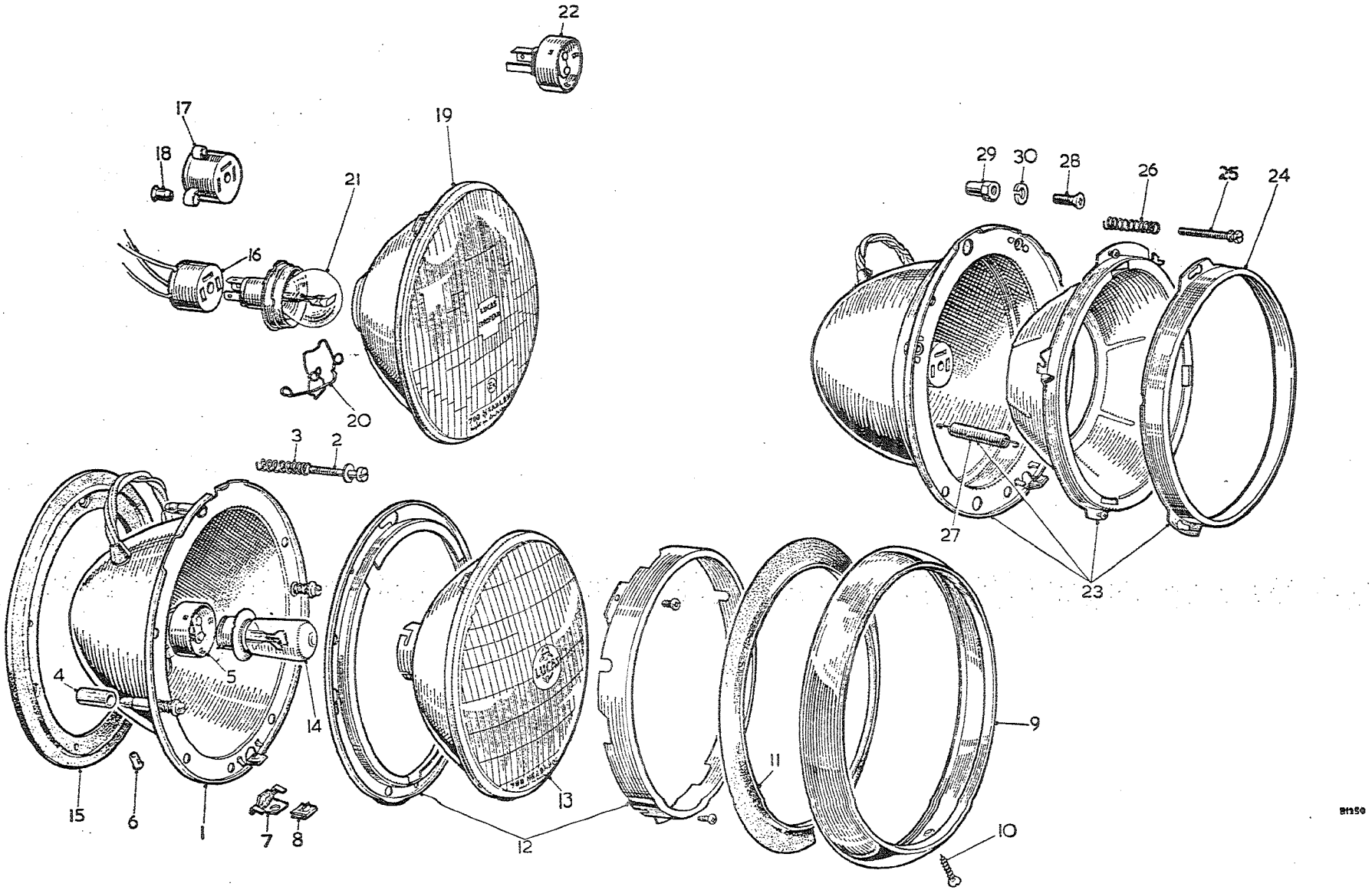

To face page N.5

Item No.	DESCRIPTION	Commencing (C) 101 Part Number	Illus. No.	Quantity	MODIFICATIONS New Part Number	MODIFICATIONS Change Point	REMARKS
	LAMPS (ROAD)						
1	**Headlamp** ..... **UK RHD**	**1B9096**		**2**			**No longer available; use component parts**
2	**Body assembly**	**7H6838**	**1**	**2**			
3	Screw—beam adjustment	17H5394	2	6			
4	Spring—screw	17H5231	3	6			
5	Sleeve—sealing	27H5253	4	6			
6	**Adaptor and cable assembly**	**17H5145**	**5**	**2**	**37H5588**		**17H5145 not available; use 37H5588**
7	**Adaptor**	**17H5306**		**2**			
8	Sleeve—terminal	7H5582	6	6	27H6713	GW 12594	] Alternatives
9	Sleeve—terminal	37H5271		6	27H6713	GW 2599	
10	Bracket—rim fixing	37H5190	7	2			
11	Nut—rim fixing screw	AJA5083	8	2	27H5354		AJA5083 not available; use 27H5354
12	**Rim assembly**	**37H5530**	**9**	**2**			
13	Screw—rim fixing	AJA5081	10	2			
14	Excluder—dust	3H2962	11	2			
15	Plate—light unit retaining	17H5205	12	2			
16	**Light unit**	**7H5483**	**13**	**2**			
17	Bulb—left dip	BFS354	14	2			Part No. change; was 3H1892
18	Gasket—body	3H993	15	2			
19	**Headlamp—Europe except France** ..... **LHD**	**BHA4096**		**2**			**No longer available; use component parts**
20	**Body assembly**	**67H5028**	**1**	**2**			
21	Screw—beam adjustment	17H5394	2	6			
22	Spring—screw	17H5231	3	6			
23	Sleeve—sealing	27H5253	4	6			
24	**Adaptor and cable assembly**	**BHA4235**	**16**	**2**			
25	**Adaptor**	**47H5126**	17	2			
26	Sleeve—terminal	7H5582	18	6			
27	Sleeve—terminal	37H5271		6			
28	Bracket—rim fixing	37H5190	7	2			
29	Nut—rim fixing screw	27H5354	8	2			
30	**Rim assembly**	**37H5530**	**9**	**2**			
31	Screw—rim fixing	AJA5081	10	2			
32	Excluder—dust	3H2962	11	2			
33	Plate—light unit retaining	17H5205	12	2			
34	**Light unit**	**47H5124**	**19**	**2**			
35	Spring—bulb retaining	47H5125	20	2			
36	Bulb—vertical dip	BFS410	21	2			Part No. change; was 13H138
37	Gasket—body	47H5545	15	2			

Item No.	DESCRIPTION	Commencing (C) 101 Part Number	Illus. No.	Quantity	MODIFICATIONS New Part Number	MODIFICATIONS Change Point	REMARKS
	Lamps (Road)—*continued*						
1	**Headlamp** ..... **Sweden**			2	**BHA4146**		**No longer available; use component parts**
2	**Body assembly**		1	2	**67H5028**		
3	Screw—beam adjustment		2	6	17H5394		
4	Spring—screw		3	6	17H5231		
5	Sleeve—sealing		4	6	27H5253		
6	**Adaptor and cable assembly**		16	2	**BHA4235**		
7	**Adaptor**		17	2	**47H5216**		
8	Sleeve—terminal		18	6	7H5582	Com. (C) 9239	Alternatives
9	Sleeve—terminal			6	37H5271		
10	Bracket—rim fixing		7	2	37H5190		
11	Nut—rim fixing screw		8	2	27H5354		
12	**Rim assembly**		9	2	**37H5530**		
13	Screw—rim fixing		10	2	AJA5081		
14	Excluder—dust		11	2	3H2962		
15	Plate—light unit retaining		12	2	17H5205		
16	**Light unit**		19	2	**47H5528**		
17	Spring—bulb retaining		20	2	47H5125		
18	Bulb—vertical dip		21	2	BFS410		Part No. change; was 13H138
19	Gasket—body		15	2	47H5545		
20	**Headlamp** ..... **France LHD**	**BHA4097**		2			**No longer available; use component parts**
21	**Body assembly**	**67H5028**	1	2			
22	Screw—beam adjustment	17H5394	2	6			
23	Spring—screw	17H5231	3	6			
24	Sleeve—sealing	27H5253	4	6			
25	**Adaptor and cable assembly**	**BHA4235**	16	2			
26	**Adaptor**	**47H5126**	17	2			
27	Sleeve—terminal	7H5582	18	6			Alternatives
28	Sleeve—terminal	37H5271		6			
29	Bracket—rim fixing	37H5190	7	2			
30	Nut—rim fixing screw	27H5354	8	2			
31	**Rim assembly**	**37H5530**	9	2			
32	Screw—rim fixing	AJA5081	10	2			
33	Excluder—dust	3H2962	11	2			
34	Plate—light unit retaining	17H5205	12	2			
35	**Light unit**	**47H5124**	19	2			
36	Spring—bulb retaining	47H5125	20	2			
37	Bulb—yellow	BFS411	21	2			Part No. change; was 13H139
38	Gasket—body	47H5545	15	2			

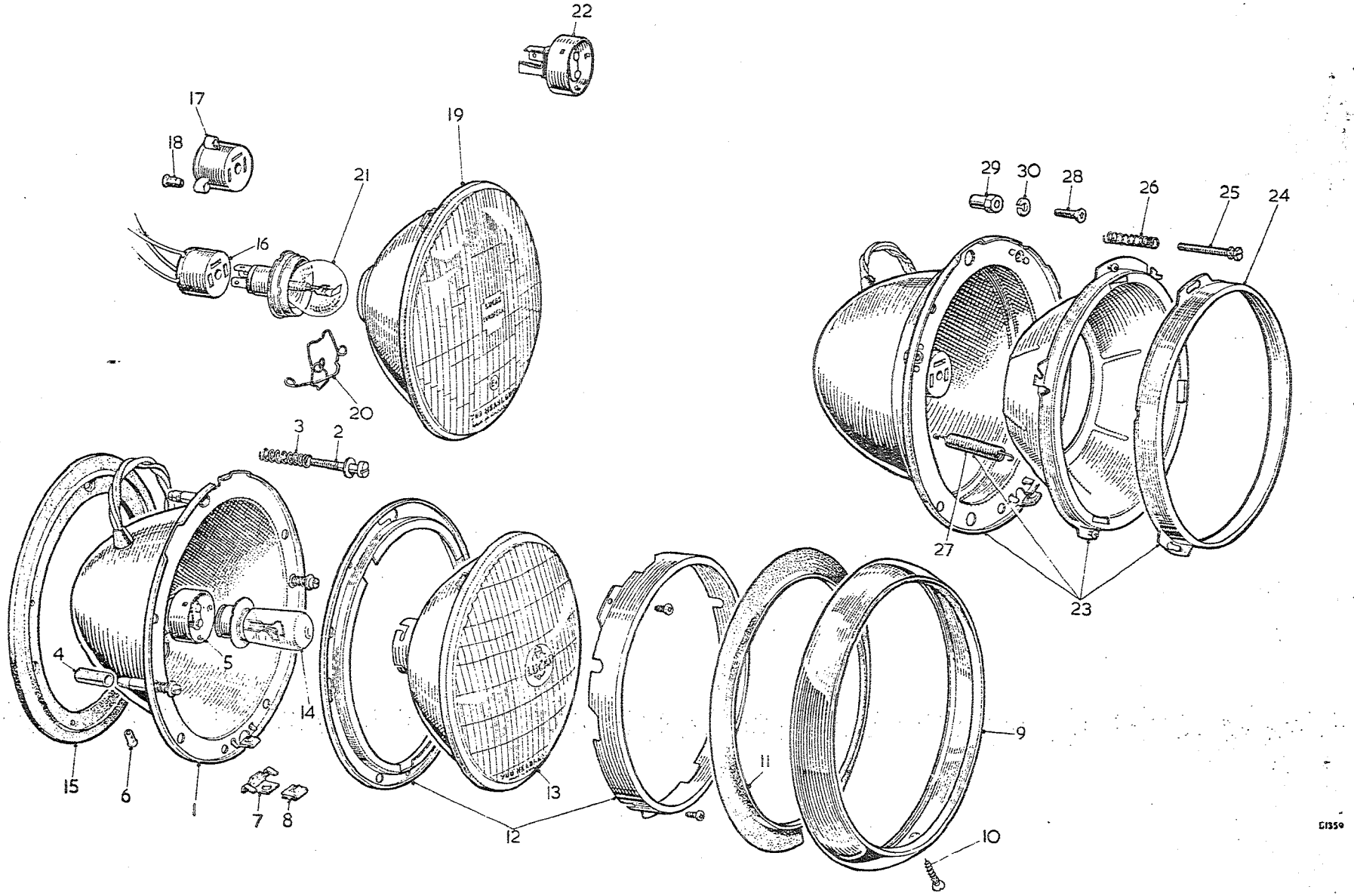

To face page N.6

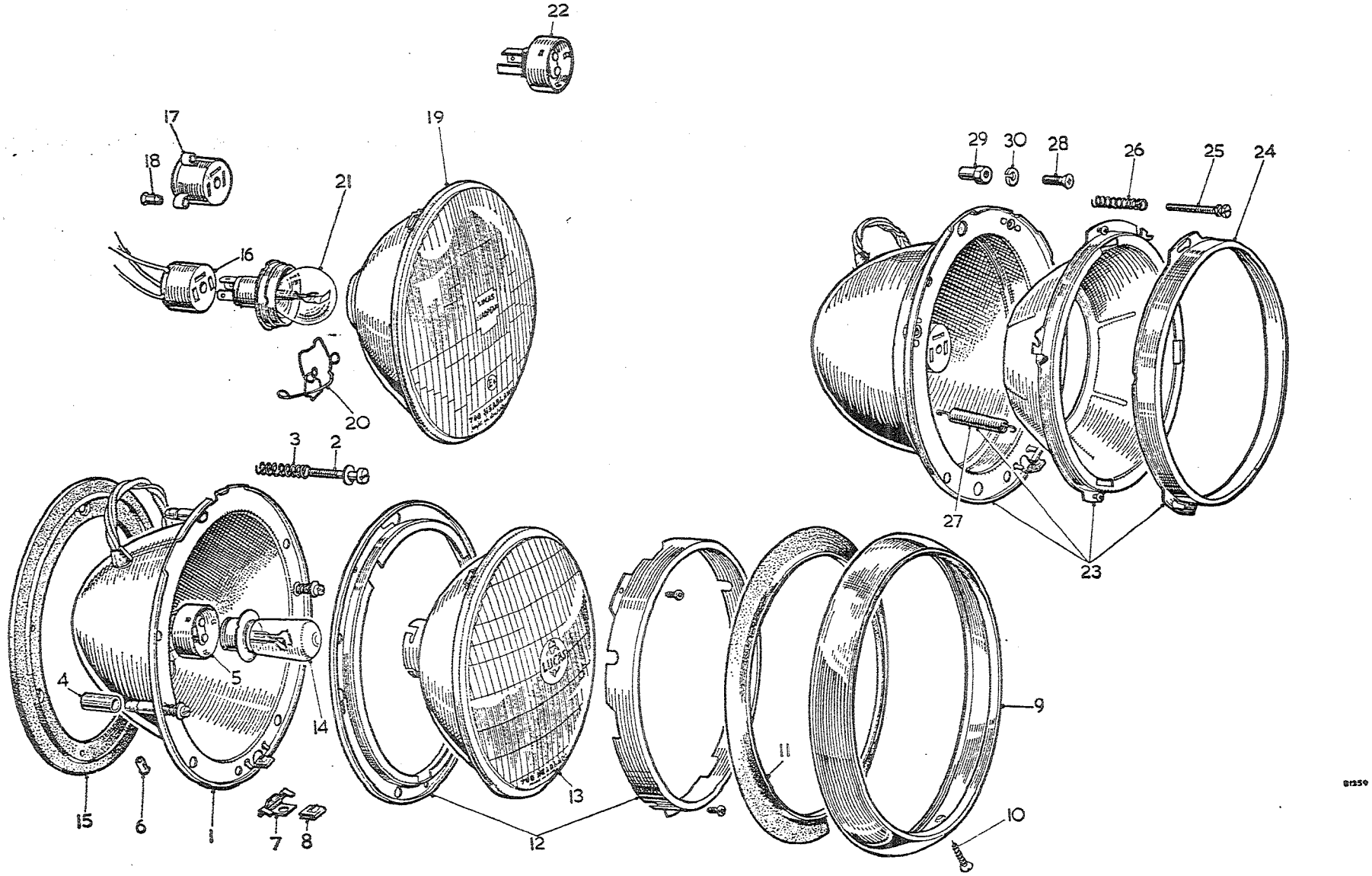

To face page N.7

Item No.	DESCRIPTION	Commencing (C) 101 Part Number	Illus. No.	Quantity	MODIFICATIONS New Part Number	MODIFICATIONS Change Point	REMARKS
	Lamps (Road)—*continued*						
1	**Headlamp** ..... **(except Europe) LHD**	**1B9095**		2			**No longer available; use component parts**
2	**Body assembly**	**67H5028**	1	2			
3	Screw—beam adjustment	17H5394	2	6			
4	Spring—screw	17H5231	3	6			
5	Sleeve—sealing	27H5253	4	6			
6	**Adaptor and cable assembly**	**BHA4235**	16	2			**Part No. change; was 17H5244**
7	**Adaptor**	**47H5126**	17	2			
8	Sleeve—terminal	7H5582	18	6		Fin. (C) 2275 BN7] USA 2176 BT7] 17309 Canada	] Alternatives
9	Sleeve—terminal	37H5271		6			
10	Bracket—rim fixing	37H5190	7	2			
11	Nut—rim fixing screw	27H5354	8	2			
12	**Rim assembly**	**37H5530**	9	2			
13	Screw—rim fixing	AJA5081	10	2			
14	Excluder—dust	3H2962	11	2			
15	Plate—light unit retaining	17H5205	12	2			
16	**Light unit**	**17H5375**	13	2			
17	Adaptor—conversion	17H5546	22	2			
18	Bulb—right dip	BFS355	14	2			
19	Gasket—body	3H993	15	2			Part No. change; was 3H1893
20	**Headlamp** ..... **(N. America) LHD**			2	**57H5008**		**No longer available; use component parts**
21	**Body assembly**		23	2	**67H5029**		
22	Plate—light unit retaining		24	2	17H5273		
23	Screw—beam adjustment		25	4	17H5230		
24	Spring—screw		26	4	17H5231		
25	Spring—rim—light unit seating		27	2	17H5277		
26	**Adaptor and cable assembly**		16	2	**BHA4235**	Com. (C) 2276 BN7] USA 2177 BT7] Com. (C) 17310 Canada Fin. (C) 18763	
27	**Adaptor**		17	2	**47H5126**		] Alternatives
28	Sleeve—terminal		18	6	7H5582		
29	Sleeve—terminal			6	37H5271		
30	Bracket—rim fixing		7	2	37H5190		
31	Nut—rim fixing screw		8	2	27H5354		
32	**Rim assembly**		9	2	**57H5018**		
33	Screw—rim fixing		10	2	AJA5081		
34	Gasket—body		15	2	13H349 17H5214 57H5456		] 13H349 and 17H5214 not available; use 57H5456

Item No.	DESCRIPTION	Commencing (C) 101 Part Number	Illus. No.	Quantity	MODIFICATIONS New Part Number	MODIFICATIONS Change Point	REMARKS
	Lamps (Road)—*continued*						
1	**Headlamp** ..... **(N. America) LHD**			2	**NSP**		
2	**Body assembly**			2	**67H5024**		
3	Plate—light unit retaining			2	57H5292	WSE 565 2 1913	FAU 2588
4	Screw—beam adjustment			4	67H5025		
5	Spring—rim—light unit seating			2	67H5026		
6	**Adaptor and cable assembly**		16	2	**BHA4235**		
7	**Adaptor**		17	2	**47H5126**	Com. (C) 18764	
8	Sleeve—terminal		18	6	7H5582		Alternatives
9	Sleeve—terminal			6	37H5271		
10	Bracket—rim fixing		7	2	37H5190		
11	Nut—rim fixing screw		8	2	27H5354		
12	**Rim assembly**		9	2	**57H5018**		
13	Screw—rim fixing		10	2	AJA5081		
14	Gasket—body		15	2	57H5456		
15	Screw—headlamp to body	RPZ0310	28	8	WSE RMZ 310		
16	Nut—screw	1B2805	29	8			
17	Washer—spring—nut	LWZ203	30	8			

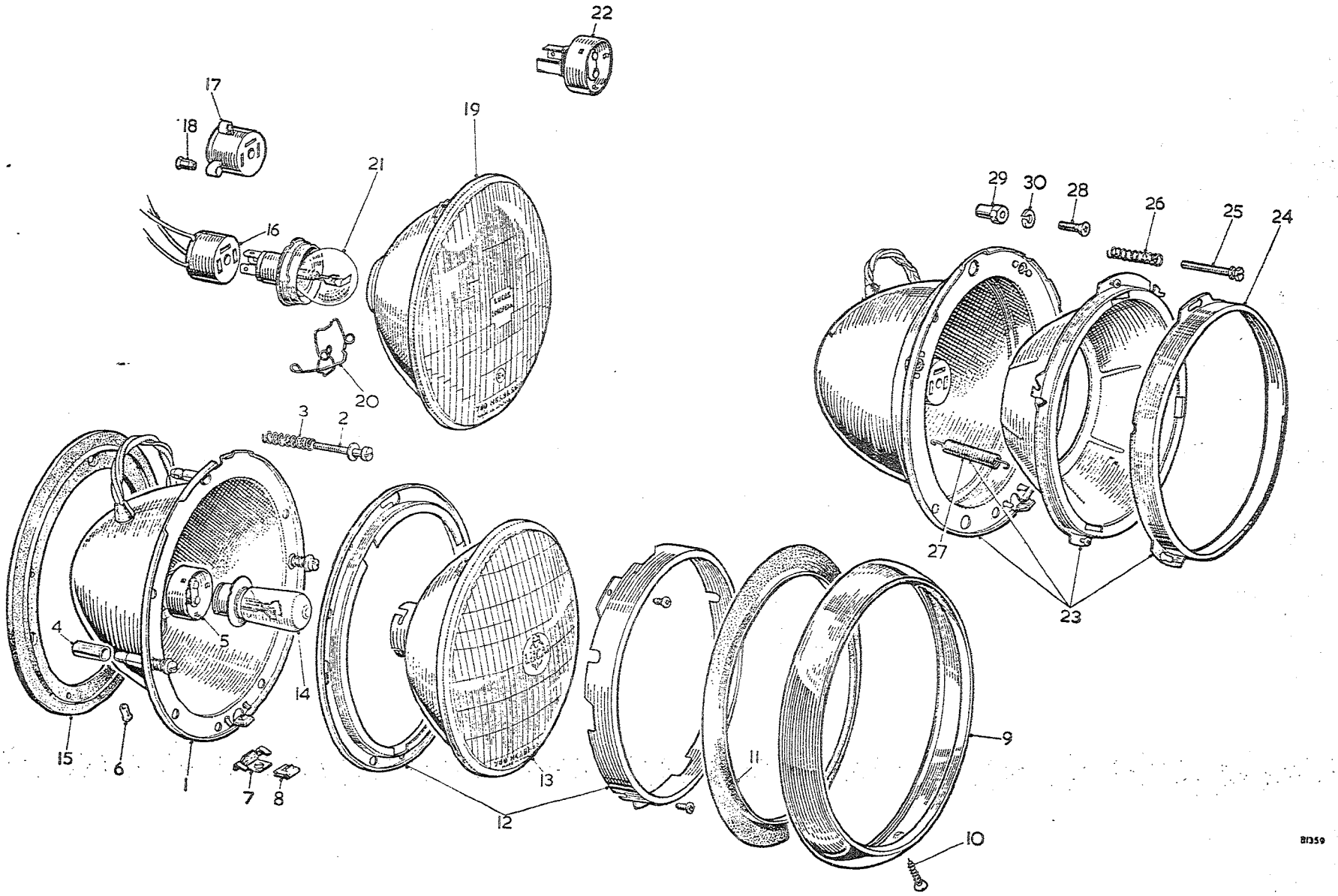

To face page N.8

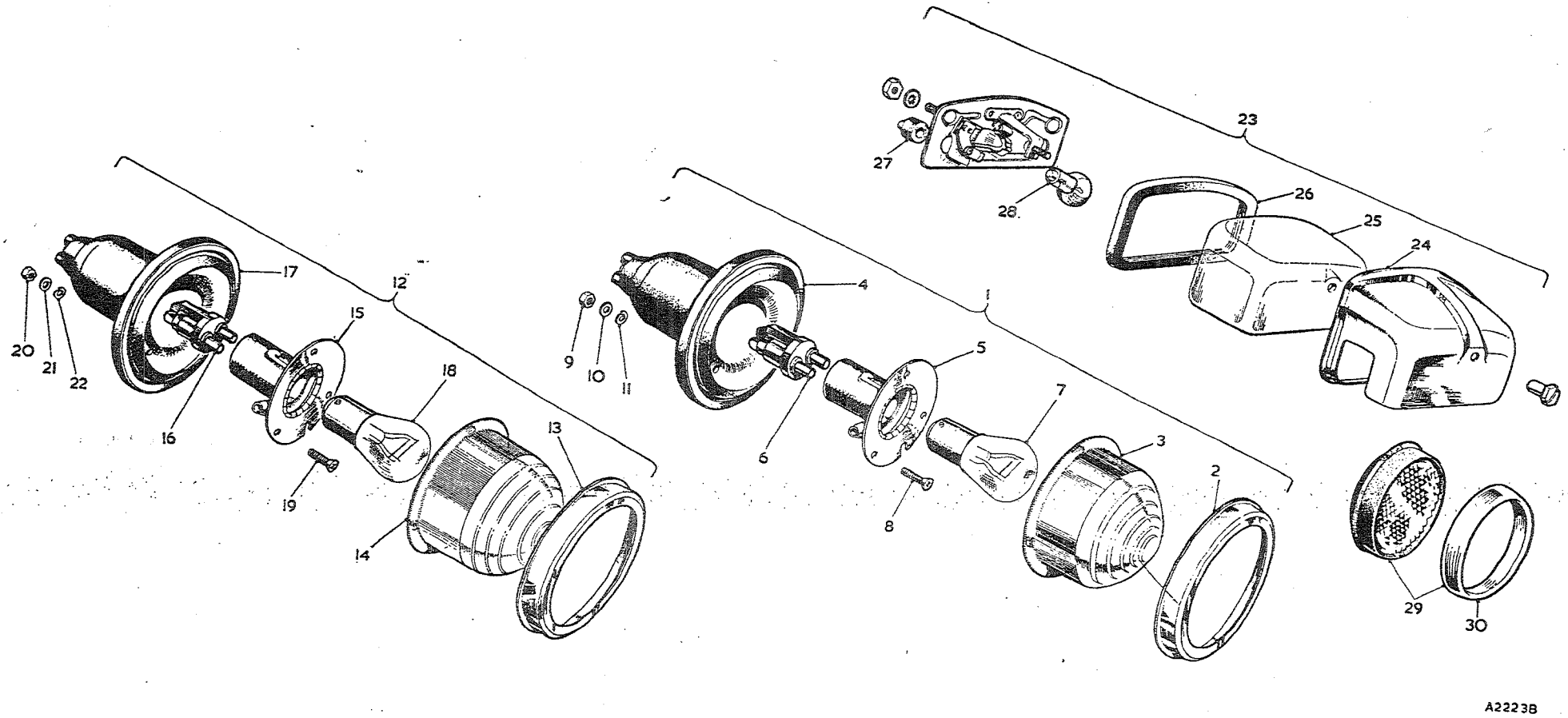

To face page N.9

Item No.	DESCRIPTION	Commencing (C) 101 Part Number	Illus. No.	Quantity	MODIFICATIONS New Part Number	MODIFICATIONS Change Point	REMARKS
	Lamps (Road)—*continued*						
1	**Side and flasher lamp**	**1B9100**	1	2			
2	Rim	7H5182	2	2			
3	Glass	37H5519	3	2			
4	Body (rubber)	37H5527	4	2			
5	**Bulb holder and plate assembly**	**27H5545**	5	2			
6	Interior—bulb holder	17H5427	6	2	7H5111		17H5427 not available; use 7H5111
7	Bulb	BFS380	7	2			Part No. change; was 1F9026
8	Screw fixing side and flasher lamp	PMZ0207	8	6			
9	Nut—screw	CNZ102	9	6			
10	Washer—plain—nut	PWZ102	10	6			
11	Washer—spring—nut	LWZ302	11	6			
12	**Stop, tail and flasher lamp complete**	**1B9101**	12	2			
13	Rim	7H5182	13	2			
14	Glass	37H5531	14	2			
15	**Bulb holder and plate assembly**	**27H5545**	15	2			
16	Interior—bulb holder	17H5427	16	2	7H5111		17H5427 not available; use 7H5111
17	Body (rubber)	37H5527	17	2			
18	Bulb	BFS380	18	2			Part No. change; was 1F9026
19	Screw fixing lamp	PMZ0207	19	6			
20	Nut—screw	CNZ102	20	6			
21	Washer—plain—nut	PWZ102	21	6			
22	Washer—spring—nut	LWZ202	22	6			
23	**Number plate lamp**	**3H1813**	23	1	**BHA4153**	**Com. (C) 13531**	
24	Cover	7H5185	24	1			
25	Glass	7H5121	25	1	57H5128	Com. (C) 13531	
26	Gasket—glass seating	7H5122	26	1	57H5368		
27	Grommet—cable	5L321	27	1		Finishing No. not available	Part No. change; was 7H5164
28	Sundry parts	7H5123		1 set			
29	Bulb	BFS989	28	1/2			
30	**Reflector—rear** USE 57050 LUCAS	**BMK352**	29	2	**BHA4149**	**Com. (C) 9453 BN7 9389 BT7**	Part No. change; was 2H4817 Quantity increased at (C) 13531 **Part No. change; BMK352 was 1B9056**
31	Rim	AJC5116	30	2			

Item No.	DESCRIPTION		Commencing (C) 101 Part Number	Illus. No.	Quantity	MODIFICATIONS New Part Number	MODIFICATIONS Change Point	REMARKS
	Lamps (Road)—*continued*							
1	**Reflector—gear**	Not UK		1	2	**BHA4148**		
2	Bracket—reflector mounting—RH			2	1	AHB8984	Com. (C) 13488	
3	Bracket—reflector mounting—LH				1	AHB8985		
4	**Flasher lamp—front and rear—amber**			3	4	**2A9013**		
5	Rim			4	4	7H5182		
6	Glass			5	4	37H5520		
7	Body (rubber)			6	4	37H5527		
8	**Bulbholder and plate assembly**			7	4	**37H5528**		
9	Interior—bulbholder			8	4	7H5202		
10	Bulb			9	4	BFS382		
11	Screw fixing flasher lamp			10	12	PMZ0207		
12	Nut—screw			11	12	CNZ102		
13	Washer—plain—nut	West Germany and Sweden		12	12	PWZ102		
14	Washer—spring—nut			13	12	LWZ302		
15	**Sidelamp**			14	2	**47H5033**	Com. (C) 15163	
16	Rim			15	2	7H5182		
17	Glass			16	2	37H5519		
18	Body (rubber)			17	2	37H5527		
19	**Bulbholder and plate assembly**			18	2	**37H5528**		
20	Interior—bulbholder			19	2	7H5202		
21	Bulb			20	2	BFS207		
22	Screw fixing headlamp			21	6	PMZ0207		
23	Nut—screw			22	6	CNZ102		
24	Washer—plain—nut			23	6	PWZ102		
25	Washer—spring—nut			24	6	LWZ302		

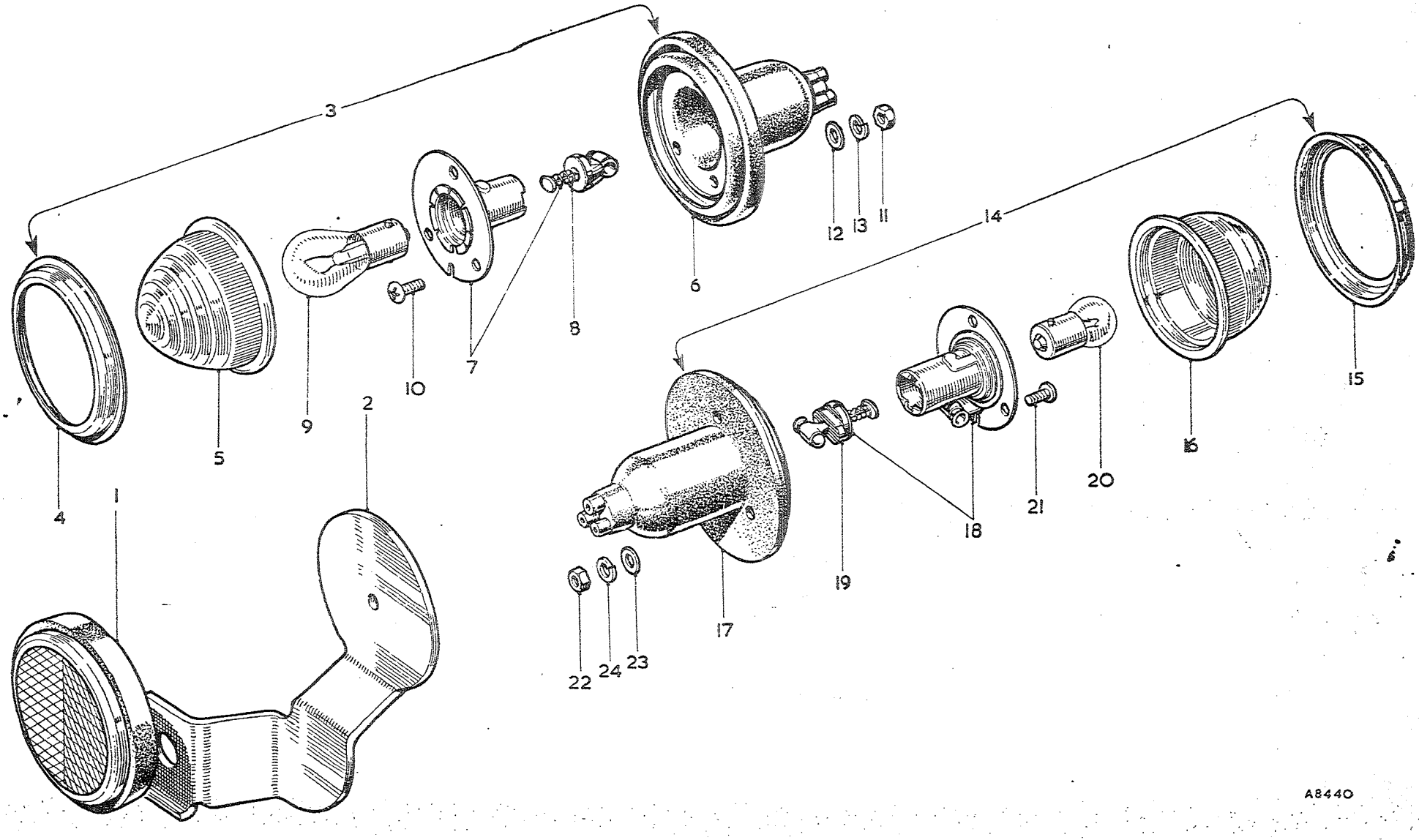

To face page N.10

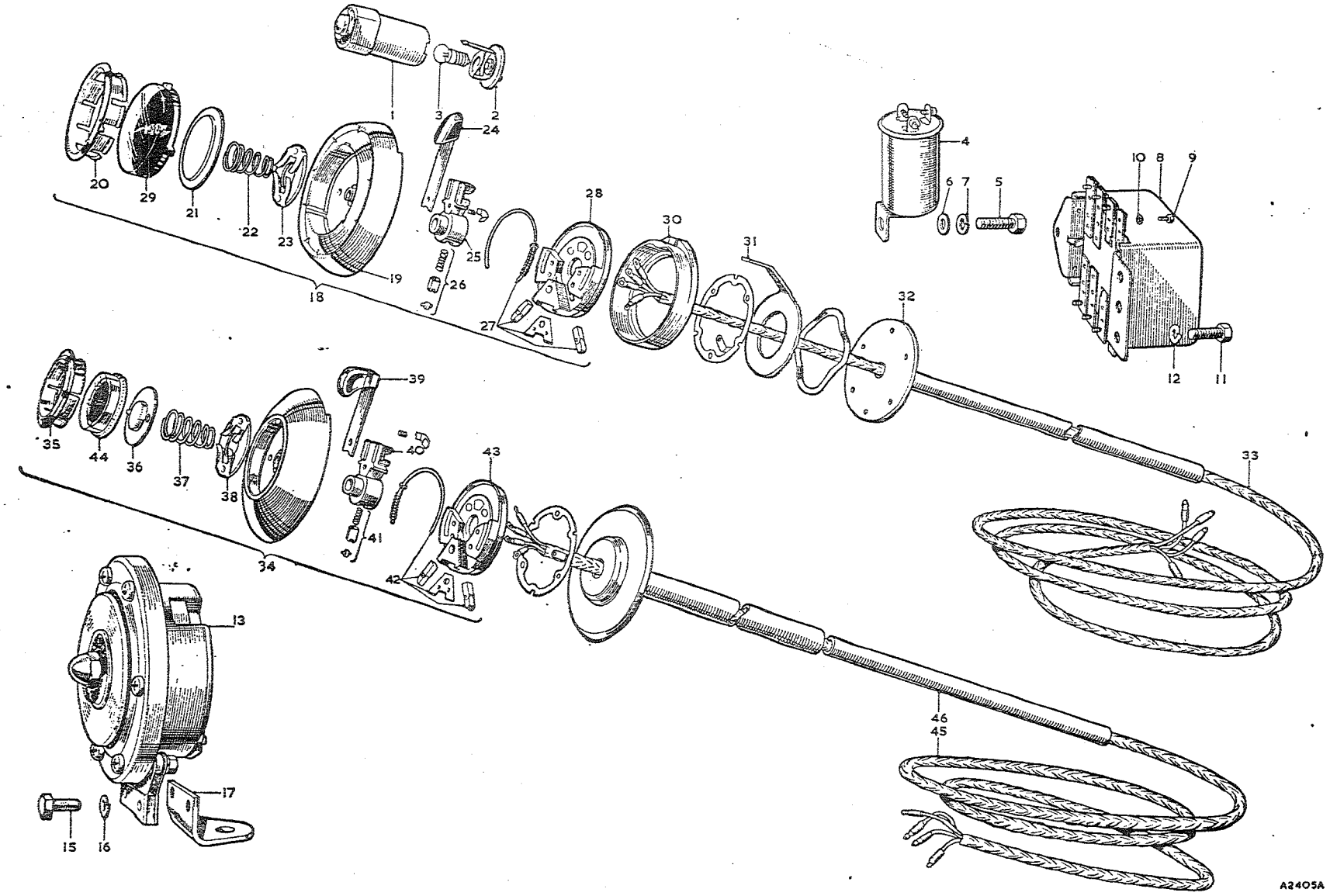

To face page N.11

Item No.	DESCRIPTION	Commencing (C) 101 Part Number	Illus. No.	Quantity	MODIFICATIONS New Part Number	MODIFICATIONS Change Point	REMARKS
	FLASHER—HORN AND CONTROLS						
1	Body and bezel—flasher indicator warning light	3H2765	1	1	57H5138		3H2765 not available; use 57H5138
2	Bulbholder and bulb	2H4978	2	1			
3	Bulb	BFS987	3	1			Part No. change; was 2H4732
4	Flasher unit	11G9093	4	1			
5	Screw—flasher unit to pedal box	PMZ0408	5	1			
6	Washer—plain—screw	PWZ104	6	1			
7	Washer—spring—screw	LWZ204	7	1			
8	Relay—flasher	3H1454	8	1			
9	Screw—terminal	17H5594	9	8			
10	Washer—terminal	27H5555	10	8	27H1473		27H5555 not available; use 27H1473
11	Screw—relay to wheelarch	PMZ0308	11	3			
12	Washer—spring—screw	LWZ203	12	3			
13	Horn—high note USE 54068006 Lucas	3H3059	13	1	13H472 BHA4444	Com. (C) 13751	Use BHA4444 for 13H472 for this application
14	Horn—low note USE 54169009 Lucas	3H3060		1	3H2449 13H473 ~~BHA4445~~ BHA4514	Fin. (C) 13750 Com. (C) 13751 RAU 2599	3H3060 not available; use 3H2449 Use ~~BHA4445~~ for 13H473 for this application RAU 2599
15	Bolt—horn to front cross member	HZS0405	15	4			
16	Washer—spring—bolt	LWZ304	16	4			
17	Plate—tapped	AHB8290	17	2		Fin. (C) 13750	
18	Screw—horn to bonnet opening support channel			4	PMZ0408		
19	Washer—spring—screw			4	LWZ204	Com. (C) 13751	
20	Nut—screw			4	FNZ104		
21	**Horn and direction indicator control**	**1B6346**		1			
22	**Top cover assembly**	**47H5244**	18	1			
23	Moulding—top cover	47H5240	19	1			
24	Ring—horn push retaining	47H5241	20	1			
25	Plate—horn push contact	47H5242	21	1			
26	Spring—horn push	7H5139	22	1			
27	Contact assembly—horn push	7H5138	23	1			
28	Lever—trafficator	47H5243	24	1			
29	**Rotor and plunger—switch**	**7H5469**	25	1			
30	Plunger assembly—rotor	7H5142	26	1			
31	Pawls and springs	7H5143	27	1 set			
32	Base assembly—switch	7H5140	28	1			
33	Horn push	47H5245	29	1			

Item No.	DESCRIPTION	Commencing (C) 101 Part Number	Illus. No.	Quantity	MODIFICATIONS New Part Number	MODIFICATIONS Change Point	REMARKS
	Flasher and Horn Controls—*continued*						
1	Sundry parts	7H5512		1 set			
2	Ring—striker	7H5471	30	1			
3	Stator tube and plate assembly	47H5246	32	1	7H5474		47H5246 not available; use 7H5474
4	Cable	47H5247	33	1			
5	**Horn and direction indicator control**	**1B6303**		1			
6	**Top cover assembly**	**47H5010**	34	1			
7	Ring—horn push retaining	7H5468	35	1			
8	Plate—horn push contact	AJA5006	36	1			
9	Spring—horn push	7H5139	37	1			
10	Contact assembly—horn push	7H5138	38	1			
11	Lever—trafficator	27H5556	39	1			
12	Rotor and plunger switch	7H5469	40	1			Adjustable steering only
13	Plunger assembly—rotor	7H5142	41	1			
14	Pawls and springs	7H5143	42	1 set			
15	Base assembly—switch	27H5557	43	1			
16	Horn push	47H5011	44	1			
17	Sundry parts	7H5512		1 set			
18	Cable	17H5259	45	1			
19	Stator tube	1B6226	46	1			
20	Bracket—striker ring location	2H2635	31	1			Part No. change; was 7H5472

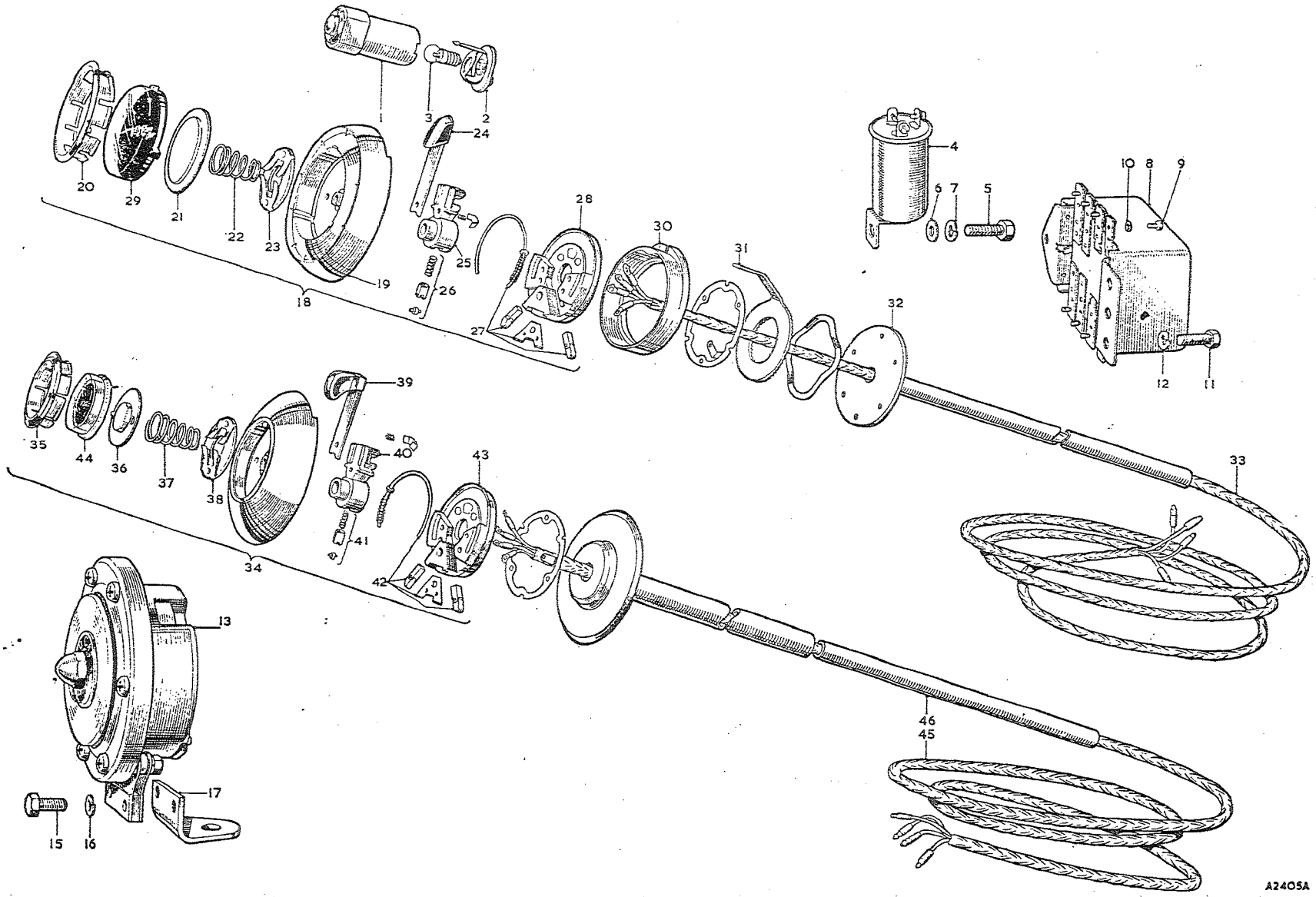

To face page N.12

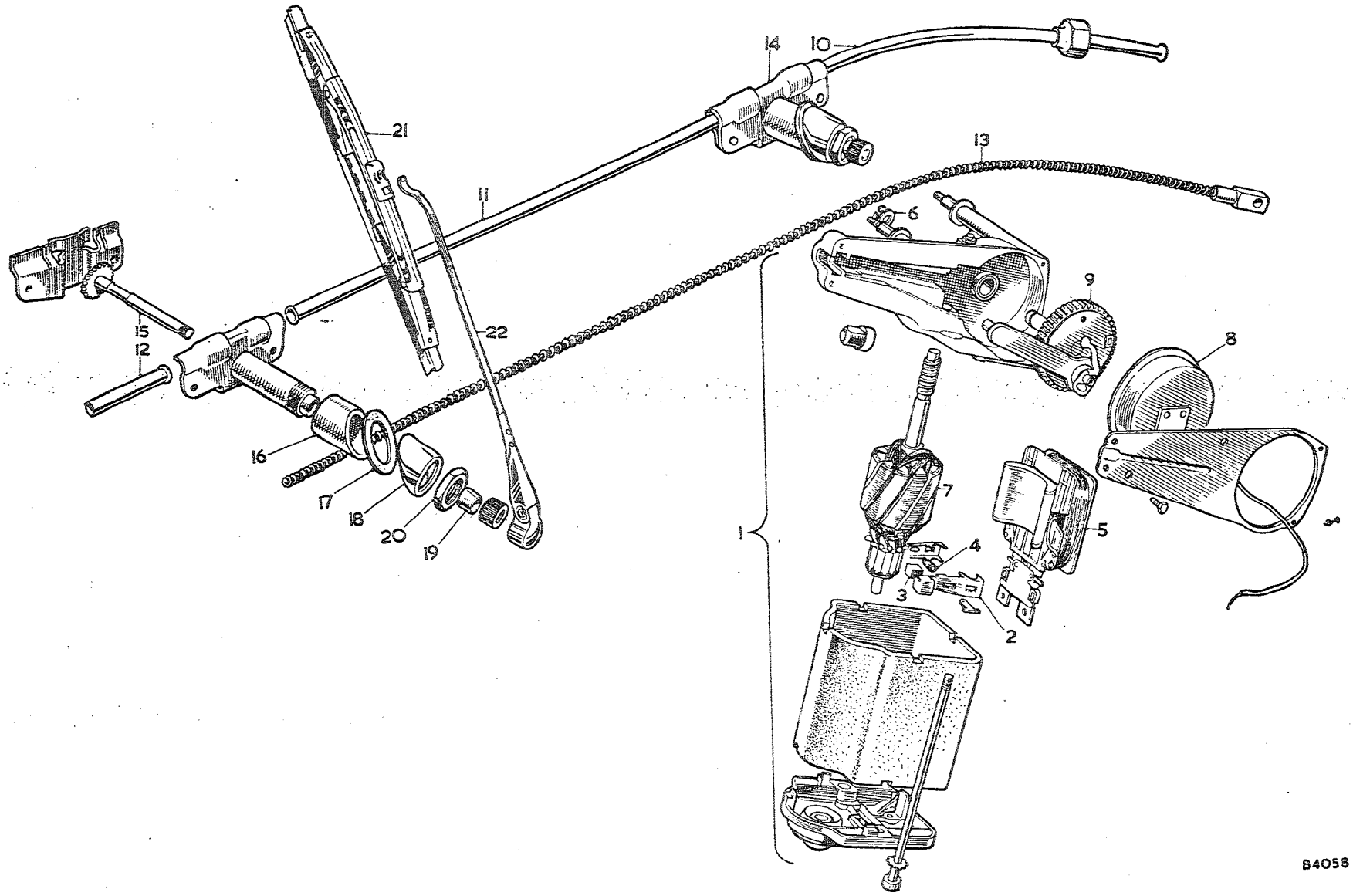

To face page N.13

Item No.	DESCRIPTION	Commencing (C) 101 Part Number	Illus. No.	Quantity	MODIFICATIONS New Part Number	MODIFICATIONS Change Point	REMARKS
	WINDSCREEN WIPERS						
1	**Motor—windscreen wiper** USE 75297 Lucas **A/D, E, F**	**37H5308**	1	1			**Not available; use 17H5475**
2	**Brush gear** USE 743171 "	**17H5396**	2	1			
3	Brush USE 729317 "	7H5130	3	1 set			
4	Spring—brush USE 735631 "	27H5309	4	1 set			
5	Coil—field USE 744099 " **A/D, E**	37H5288	5	1			Check motor suffix letter for correct part required, i.e. A/D, E and F when ordering
6	Coil—field **F**	17H9391		1			
7	Armature USE 743020 "	17H5255	7	1			
8	Switch—parking USE 743040 " **A/D**	17H5442	8	1			
9	Switch—parking **E, F**	47H5316		1			
10	Shaft and gear USE 743043 "	37H5437	9	1			
11	Shaft and gear	27H2568		1			
12	Stud—fixing USE 743176 "	17H5431		1 set			
13	Sundry parts USE 743049 "	17H5441		1 set			
14	**Motor—windscreen wiper** **A/D, E, F, H**			1	**17H5475**		
15	**Brush gear**		2	1	**17H5396**		
16	Brush		3	1 set	7H5130		
17	Spring—brush		4	1 set	27H5309		
18	Coil—field **A/D, E, F**		5	1	37H5288		Check motor suffix letter for correct part required, i.e. A/D, E, F and H when ordering
19	Coil—field **H**			1	17H9391		
20	Armature		7	1	17H5255		
21	Switch—parking **A/D, E**		8	1	17H5442		
22	Switch—parking **F, H**			1	47H5316		
23	Shaft and gear **A/D, E**		9	1	37H5437		
24	Shaft and gear **F, H**			1	27H2568		
25	Stud—fixing			1 set	17H5431		
26	Sundry parts			1 set	17H5441		
27	Casing—outer—motor to wheelbox USE 743880 Lucas	14B5589	10	1			
28	Casing—outer—wheelbox to wheelbox	14B5598	11	1			
29	Casing—outer—wheelbox extension	14G3722	12	1			
30	Crosshead and rack	37H5169	13	1			
31	**Wheelbox**	**14B5588**	14	2	**BHA4151**	**Com. (C) 6487 BN7 6435 BT7**	**14B5588 not available; use BHA4151**
32	Spindle and gear	AJH5079	15	2			
33	Bush—rear	AHH5414	16	2			
34	Washer (rubber)	ADC560	17	2			
35	Bush—front	ADB826	18	2			
36	Tube—spindle (rubber)	ANK3458	19	2			
37	Nut	ANK3459	20	2			
38	Screw—cover	AJD3202Z		4			
39	Blade—wiper	AHH5417	21	2			
40	Arm—wiper **RHD**	14B5596	22	2			
41	Arm—wiper **LHD**	14B5597		2			

Item No.	DESCRIPTION	Commencing (C) 101 Part Number	Illus. No.	Quantity	MODIFICATIONS New Part Number	MODIFICATIONS Change Point	REMARKS
	CABLES AND CONNECTIONS						
1	**Cable—main harness**	**AHB8707**	1	1	**AHB8885**	**Com. (C) 2194 except 2446, 2457**	
2	**Cable—main harness**			1	**AHB8707**	**Com. (C) 5234 BN7, 5310 BT7**	
3	**Cable—main harness (West Germany and Sweden)**			1	**AHB9142**	**Com. (C) 15163**	
4	Bulbholder—combined instrument and fuel gauge	3H914	2	2			
5	Bulbholder—speedometer, tachometer and main beam warning light	37H5181	3	3			
6	Bulbholder—ignition warning light	47H5166	4	1			
7	Bulbholder—flasher warning light	2H4978	5	1			
8	Bulb	BFS987	6	7			
9	Connector—snap—single	2H3406	7	A/R			
10	Connector—snap—2-way	2H2617	8	A/R			
11	Connector—snap—3-way	2H4992	9	A/R			
12	Plug—snap connector	2H2704	10	A/R			
13	Grommet—1″ (2·54 cm.) dia.	RFN405	11	1			
14	Grommet—2″ (5·08 cm.) dia.	2H2065	12	1			
15	Clip—main harness to filler piece	PCR0707		1			
16	Clip—main harness to dash	PCR0707		1			
17	Screw—clip	PMZ0308		1			
18	Washer—spring—screw	LWZ203		1			
19	Clip—main harness to reinforcement panel	PCR0707		1			
20	Clip—main harness to LH side of pedal box	PCR0707		1			
21	Clip—main harness to RH reinforcement	PCR0707		3			
22	Clip—main harness stop light switch	PCR0507		1			
23	Clip—main harness to LH side of cross brace	PCR0707		1			
24	Screw—clip	PMZ0308		1			
25	Nut—screw	FNZ103		1			
26	Washer—spring—nut	LWZ203		1			
27	Clip—main harness to RH side of cross brace	PCR0707		1			
28	Screw—clip	PMZ0308		1			
29	Nut—screw	FNZ103		1			
30	Washer—spring—nut	LWZ203		1			
31	Clip—main harness to relay on flitch fixings	PCR0707		1			
32	Clip—main harness solenoid switch	PCR0407		1			
33	**Cable—dipper switch harness**	**1B2847**		1			
34	Plug—snap connector	2H2704		A/R			
35	Grommet—dipper switch harness	RFN303	13	2			
36	Clip—main and dipper switch harness to dash	11K9095		1			
37	Screw—clip	PMZ0308		1			
38	Washer—spring—screw	LWZ203		1			

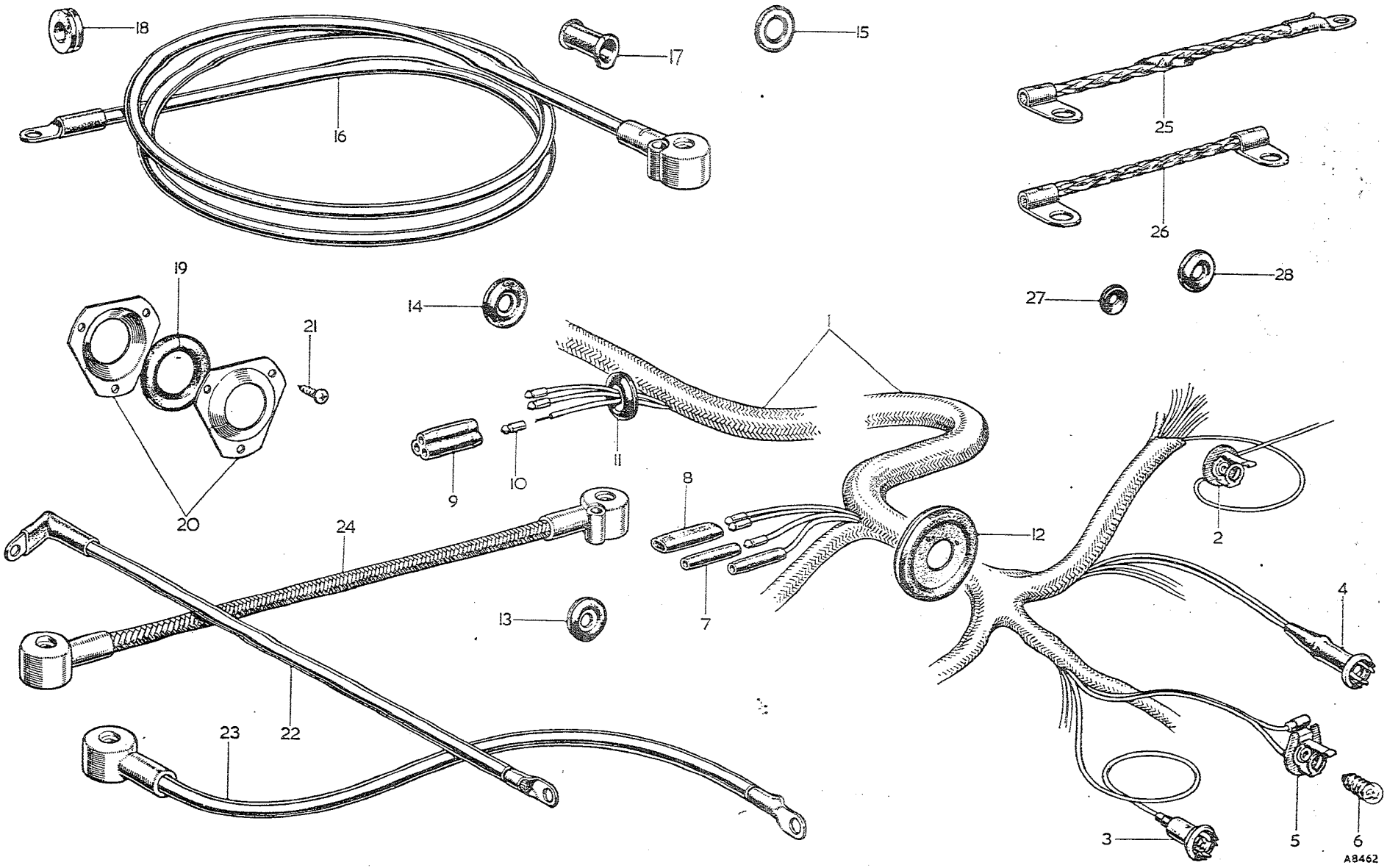

To face page N.14

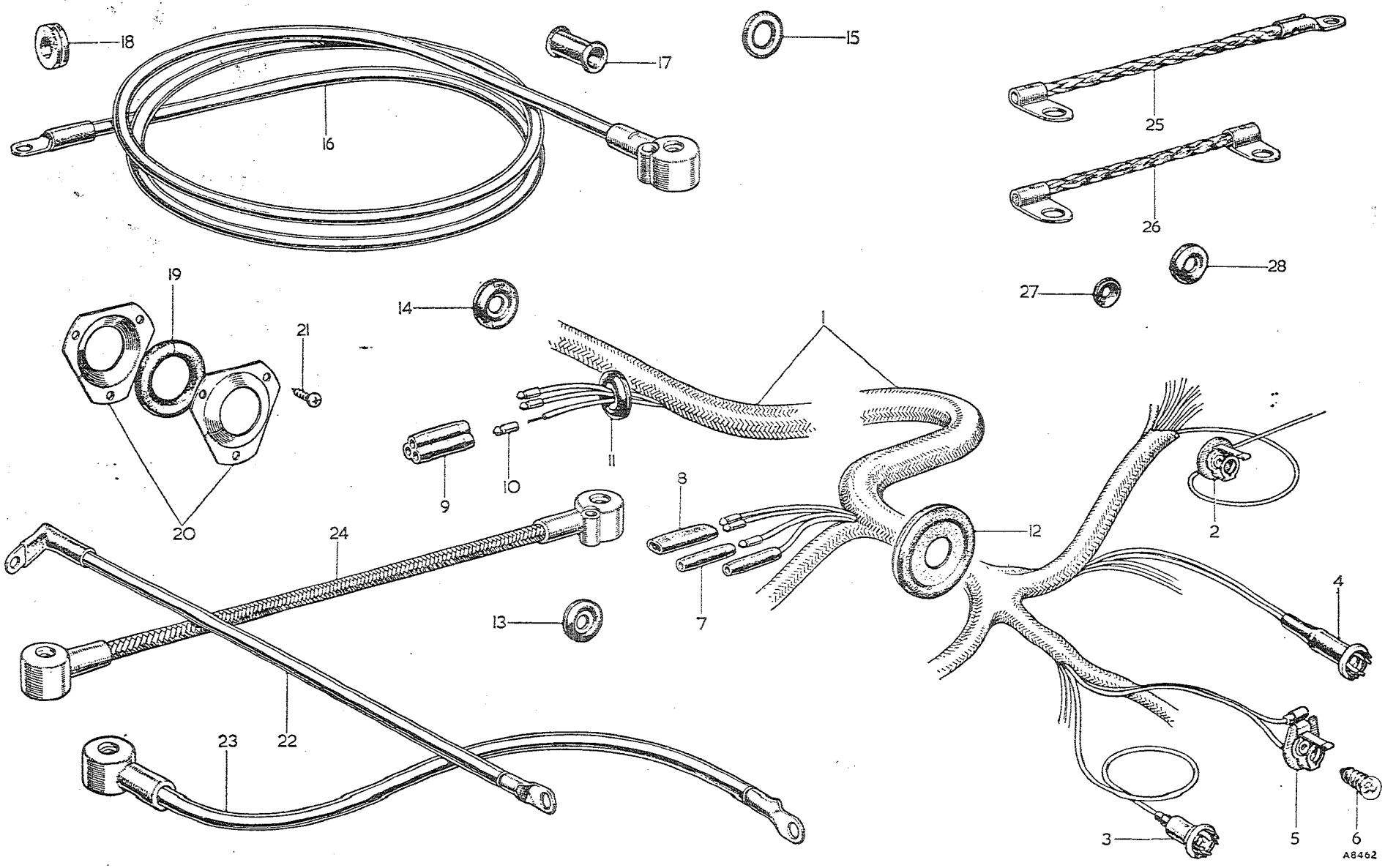

To face page N.15

Item No.	DESCRIPTION		Commencing (C) 101 Part Number	Illus. No.	Quantity	MODIFICATIONS New Part Number	MODIFICATIONS Change Point	REMARKS
	Cables and Connections—*continued*							
1	**Cable—chassis harness**		**AHB8287**		1	**AHB9550**	**Com. (C) 17547**	
2	**Cable—chassis harness (West Germany and Sweden)**				1	**AHB9144**	**Com. (C) 15163**	
						AHB9552	**Com. (C) 17547**	
3	Plug—snap connector	BN7	2H2704		A/R			
4	Clip—chassis harness to LH side member	BN7	PCR0607		5			
5	**Cable—chassis harness**		**AHB8318**		1	**AHB9549**	**Com. (C) 17352**	
6	**Cable—chassis harness (West Germany and Sweden)**				1	**AHB9143**	**Com. (C) 15163**	
						AHB9551	**Com. (C) 17352**	
7	Plug—snap connector	BT7	2H2704		A/R			
8	Clip—chassis harness to LH side member	BT7	PCR0607		6			
9	Clip—chassis harness to engine cover		PCR0507		2			
10	Screw—clip		PMZ0308		2			
11	Nut—screw		FNZ103		2			
12	Washer—spring—nut		LWZ203		2			
13	Clip—chassis harness to LH reinforcement piece		PCR0407		1			
14	Clip—chassis harness to bump rubber box	BN7	PCR0507		1			
15	Clip—chassis harness and battery lead to bump rubber box	BT7	PCR0607		2			
16	Grommet—chassis harness		RFN405	14	1			
17	Ring—side lamp cables (rubber)		2H35	15	2			
18	Clip—edge—headlamp cable to crossbrace		11K9181		2			
19	Clip—stator tube cable to crossbrace		ADA2657		1			
20	**Cable—boot harness**		**1B2796**		1			
21	**Cable—boot harness (West Germany and Sweden)**				1	**AHB9145**	**Com. (C) 15163**	
22	Connector—snap—single		2H3406		A/R			
23	Connector—snap—2-way		2H2617		A/R			
24	Plug—snap connector		2H2704		A/R			
25	Clip—boot harness to rear of boot		PCR0507		2			
26	**Cable—battery negative to starter solenoid switch**		**1B2800**	16	1			
27	Sleeve—cable (rubber)			17	1	ACH8529	Com. (C) 1065	
28	Clip—battery negative cable to RH side member		PCR0607		4			
29	Screw—clip to frame	BN7			2	PTZ1003	Com. (C) 17547	
30	Clip—battery negative cable to heelboard panel	BN7	PCR0809		1	PCR0809	Com. (C) 1065	
31	Screw—clip	BN7	HZS0403		1			
32	Nut—screw	BN7	FNZ104		1			
33	Washer—spring—nut	BN7	LWZ204		1			
34	**Cable—battery negative to starter solenoid switch**		**1B9080**		1			
35	Clip—battery negative cable to RH side member	BT7	PCR0707		5/6			Quantity increased at (C) 17352
36	Clip—battery negative cable to heelboard	BT7			1	PCR0709	Com. (C) 17352	

Item No.	DESCRIPTION		Commencing (C) 101 Part Number	Commencing (C) 101 Illus. No.	Quantity	MODIFICATIONS New Part Number	MODIFICATIONS Change Point	REMARKS
	Cables and Connections—*continued*							
1	Clip—battery negative cable to rear engine side cover	BT7	PCR0707		1			
2	Clip—battery negative cable to engine side cover	BN7	PCR0607		1			
3	Clip—battery negative cable to heelboard		PCR0707		1			
4	Screw—clip		PMZ0308		1			
5	Nut—screw		FNZ103		1			
6	Washer—spring—nut		LWZ203		1			
7	Grommet—battery negative cable	BT7	3H822	18	1		Fin. (C) 15861	
8	Grommet—battery negative through fuel filler compartment panel and boot vertical panel			19	2	BHA4281	Com. (C) 15862	
9	Cap—grommet retaining			20	2	AAA1891		Part No. change; was 133278
10	Screw—cap and grommet to panel			21	6	53K3216		Part No. change; was 130454
11	**Cable—starter solenoid switch to starter**		**1B2801**	**22**	1			
12	**Cable—battery positive to master switch**	BN7	**AHB8288**	**23**	1			
13	Cable—battery positive to master switch	BT7	27H5578		1			
14	**Cable—battery link**	BN7	**AHB8289**	**24**	1			
15	**Cable—battery master switch to earth**		**1B9078**	**25**	1			
16	Screw—cable to frame	BT7	HZS0604		1			
17	Washer—spring—screw	BT7	LWZ206		1			
18	**Cable—engine earth**		**2K6167**	**26**	1			
19	Screw—cable to frame		HZS0604		1			
20	Washer—spring—screw		LWZ206		1			
21	Grommet—tank unit cable through boot vertical panel	BT7	3F90	27	1			
22	Grommet—number plate lamp through rear panel		3H2144	28	1			
23	**Cable—overdrive harness**		**AHB8708**		1			**For use when overdrive is fitted**
24	Plug—snap connector		2H2704		A/R			
25	Clip—overdrive harness to dash		PCR0407		1			
26	Clip—overdrive harness to gearbox side cover		PCR0311		1			
27	Clip—chassis and overdrive harness to engine side cover—top		PCR0607		1			
28	Screw—clip		PMZ0308		1			
29	Nut—screw		FNZ103		1			
30	Washer—spring—nut		LWZ203		1			
31	Drive screw—cable clip		PTZ1004		A/R			

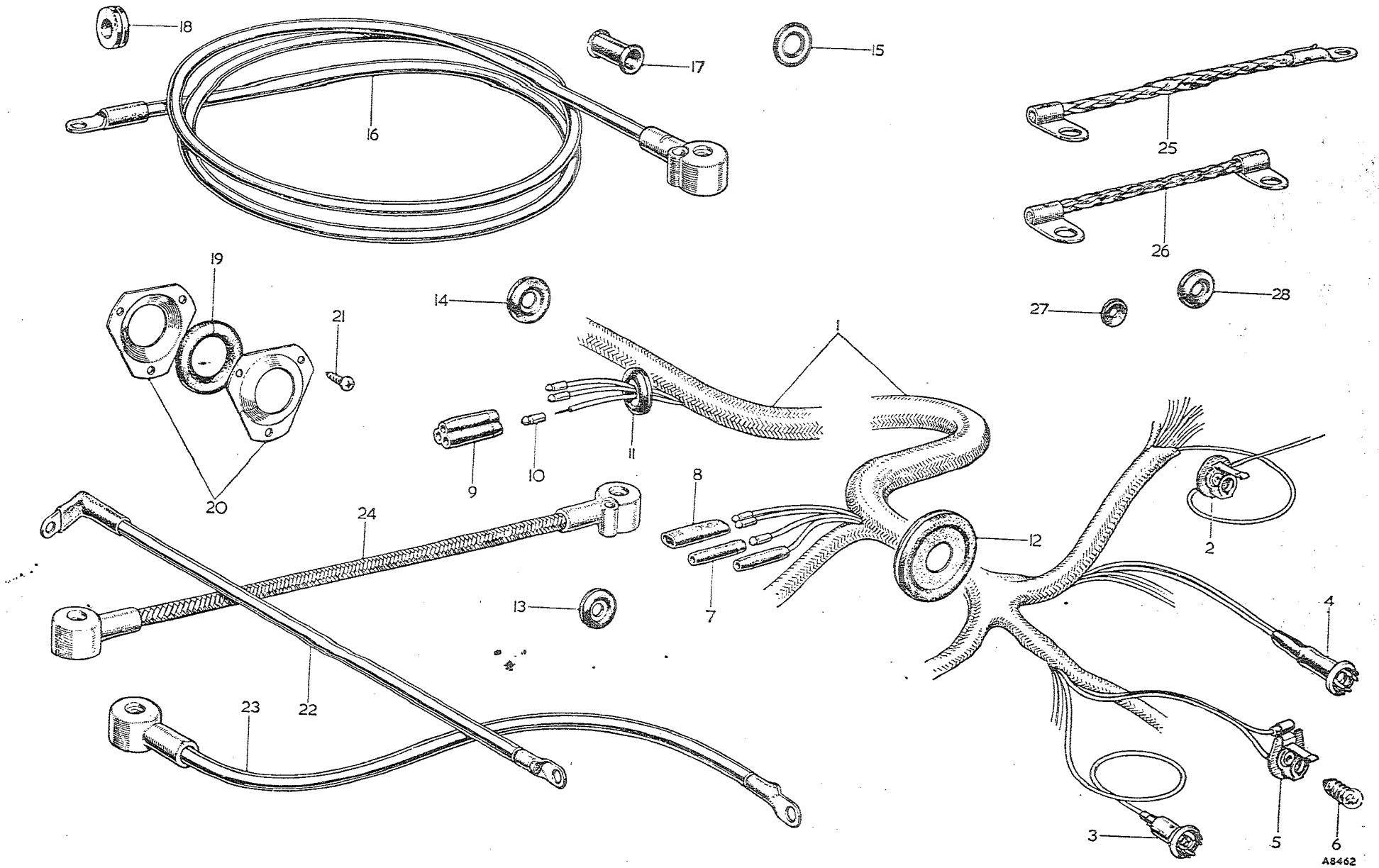

To face page N.16

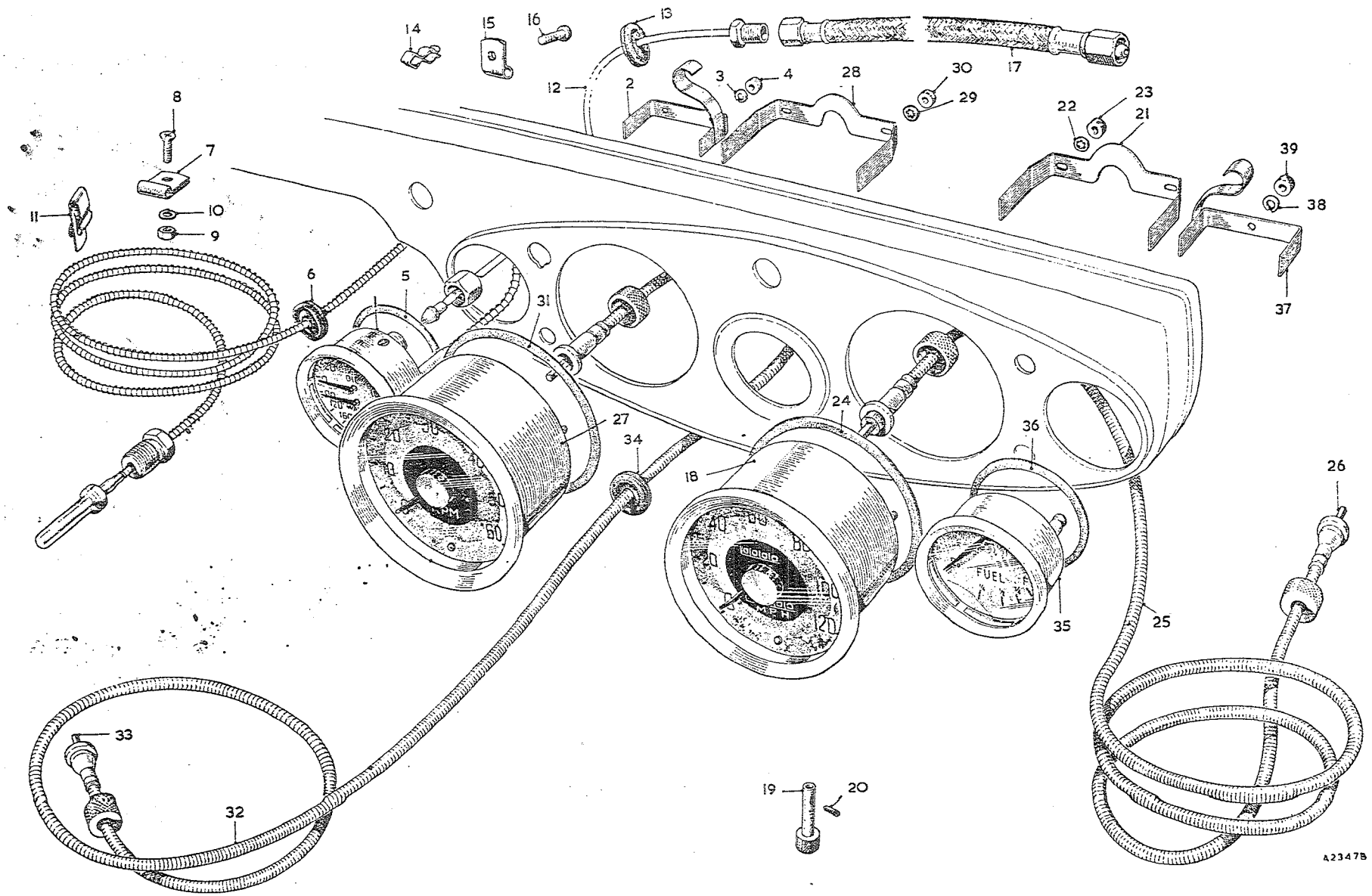

To face page 0.1

Item No.	DESCRIPTION	Commencing (C) 101 Part Number	Illus. No.	Quantity	MODIFICATIONS New Part Number	MODIFICATIONS Change Point	REMARKS
	INSTRUMENTS						
1	**Gauge—oil pressure and radiator thermometer—fahrenheit**	**BHA4133**	1	1			
2	**Gauge—oil pressure and radiator thermometer—centigrade**		1	1	**BHA4252**	**Com. (C) 14299**	
3	Bezel	AJH5182		1			
4	Glass	17H1068		1			
5	Strap—fixing	27H992	4	1			
6	Washer—spring	27H387	5	2	LWZ302		27H387 not available; use LWZ302
7	Nut—thumb	17H932	6	2			
8	Ring (rubber)	17H1642	7	1			
9	Grommet—tube through dash	3H2615	8	1			
10	Strap—thermo capillary tube to breather pipe	ACH8979		1			
11	Clip—thermo capillary tube	BHA4081	9	2			
12	**Pipe—oil gauge**	**11B2188**	13	1			
13	Pipe—oil gauge **RHD**	11B2186		1			
14	**LHD** Grommet—pipe through dash	RFN403	14	1			
15	Clip—pipe	6K35	15	2			
16	Clip—pipe **RHD**	2K5215	16	1			
17	Screw—clip	PMZ0307	17	1			
18	Clip—pipe to dash			1	PCR0307	Com. (C) 13751	
19	**Hose—flexible**	**8G637**	18	1			
20	**Speedometer—miles**	**BHA4124**	19	1			
21	**Speedometer—kilometres**	**BHA4125**		1	**BHA4223**	**Com. (C) 14171**	
22	**Speedometer—miles**	**BHA4126**		1			
23	**Speedometer—kilometres**	**BHA4127**		1	**BHA4224**	**Com. (C) 14171**	**For use when overdrive is fitted**
24	Bezel	27H397		1			
25	Glass	AJH5177		1			
26	Trip stem assembly	17H1684	22	1		Fin. (C) 14170	
27	Screw—trip stem	17H1658	23	1			
28	Knob—trip return			1	37H614	Com. (C) 14171	
29	Screw—knob			1	17H1658		
30	Strap—fixing	AJH5176	24	1			
31	Washer—shakeproof	17H1341		2	2K1369		Part No. change; was 27H429 17H1341 not available; use 2K1369
32	Nut—thumb	17H1304	25	2			
33	Ring (rubber)	AJH5178	26	1			
34	**Cable—speedometer—4′ 8″ (142·24 cm.)**	**2A9039**		1			
35	Cable—outer	17H690	27	1		Fin. (C) 5588 BN7, 6774 BT7	
36	Cable—inner	17H689	28	1			
37	**Cable—speedometer—4′ 0″ (121·92 cm.)**			1	**21G9084**		
38	Cable—outer		27	1	17H631	Com. (C) 5589 BN7, 6774 BT7	Part No. change; was ACH8658
39	Cable—inner		28	1	17H630		

Item No.	DESCRIPTION	Commencing (C) 101 Part Number	Illus. No.	Quantity	MODIFICATIONS New Part Number	MODIFICATIONS Change Point	REMARKS
	Instruments—*continued*						
1	**Cable—speedometer—3′ 6″ (106·68 cm.)**			1	**BHA4294**		
2	Cable—outer		27	1	37H1206	Com. (C) 16039 BN7, 15881 BT7	
3	Cable—inner		28	1	37H1204		
4	**Cable—speedometer—5′ 2″ (157·44 cm.)**	**1H9094**		1			
5	Cable—outer	17H1496	27	1		Fin. (C) 5588 BN7, 6774 BT7	For use when overdrive is fitted
6	Cable—inner	17H844	28	1			
7	**Cable—speedometer—4′ 8″ (142·24 cm.)**			1	**2A9039**		
8	Cable—outer		27	1	17H690	Com. (C) 5589 BN7, 6775 BT7	
9	Cable—inner		28	1	17H689		
10	**Cable—speedometer—4′ 3″ (129·54 cm.)**			1	**BHA4293**		
11	Cable—outer		27	1	37H1207	Com. (C) 16039 BN7, 15881 BT7	
12	Cable—inner		28	1	17H1061		
13	**Tachometer**	**1B9188**	**29**	1			
14	Bezel	27H397		1			
15	Glass	AJH5177		1			
16	Strap—fixing	AJH5176	32	1			Part No. change; was 27H429
17	Washer—shakeproof	17H1341	33	2	2K1369		17H1341 not available; use 2K1369
18	Nut—thumb	17H1304	34	2			
19	Ring (rubber)	AJH5178	35	1			
20	**Cable—tachometer—2′ 9″ (83·82 cm.)**	**1B9140**		1			
21	Cable—outer **RHD**	27H984	36	1			
22	Cable—inner	27H985	37	1			
23	**Cable—tachometer—4′ 0″ (121·92 cm.)**	**1B9141**		1			
24	Cable—outer **LHD**	17H1343	36	1			
25	Cable—inner	17H630	37	1			
26	Grommet—cable through dash	RFN405	38	1			
27	**Gauge—fuel**	**1B9061**	**39**	1			
28	Bezel	AJH5182		1			
29	Glass	17H1068		1			
30	Ring (rubber)	17H1642	42	1			
31	Strap—fixing and lamp holder complete	17H1822	43	1			
32	Washer—spring	27H387	44	1	LWZ302		27H387 not available; use LWZ302
33	Nut—thumb	17H932	45	1			

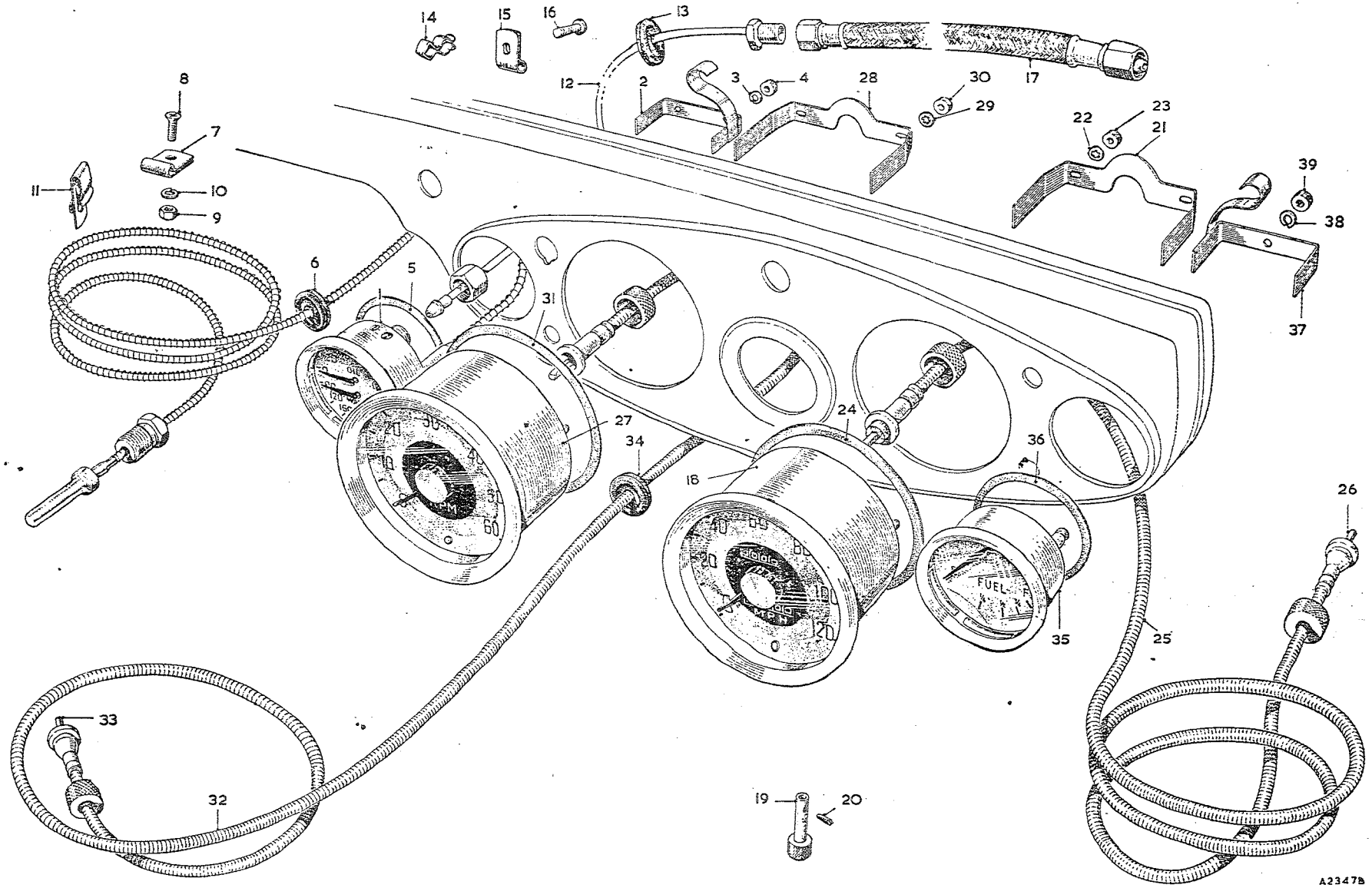

To face page O.2

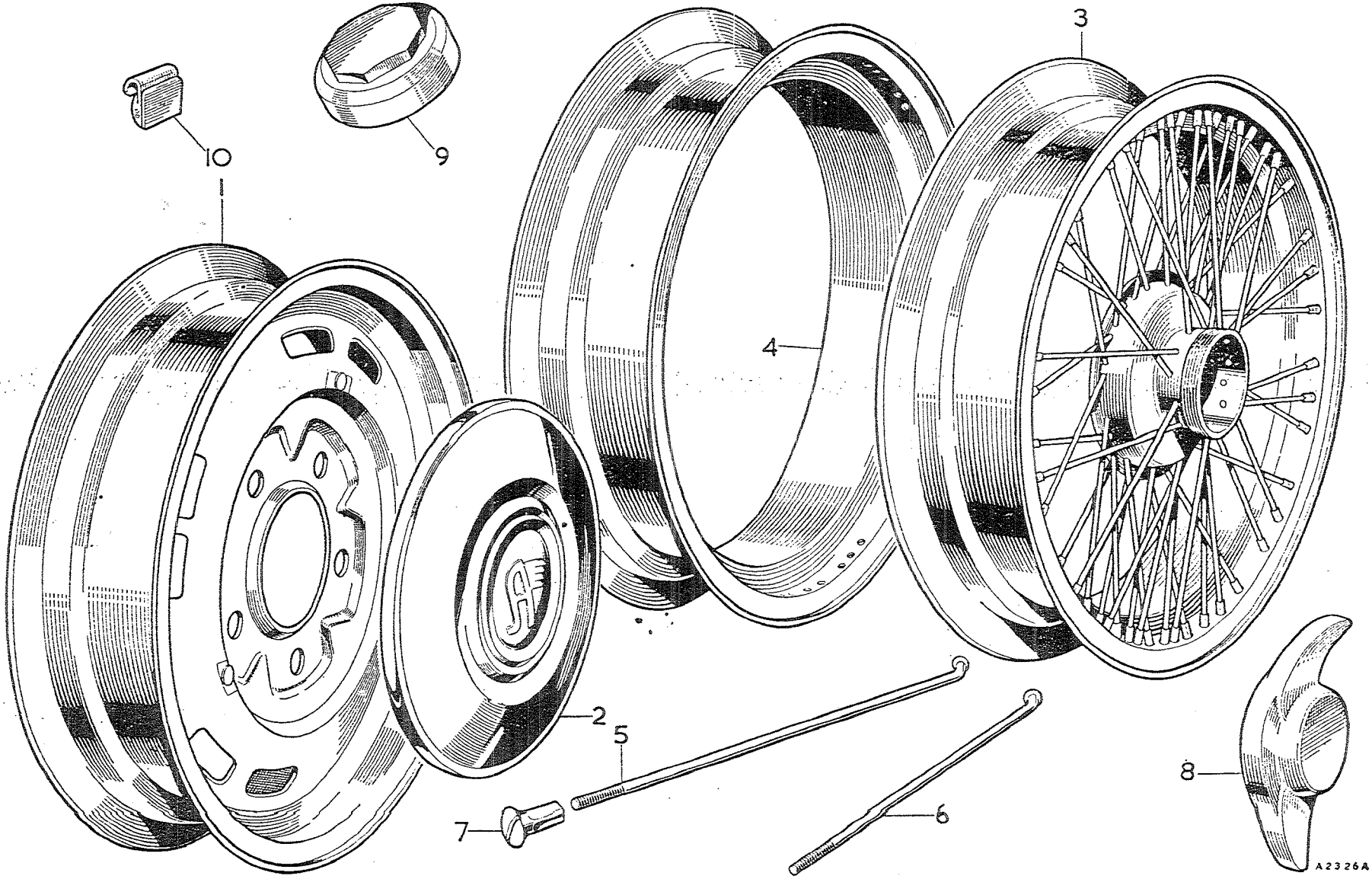

To face page P.1

WHEELS

Item No.	DESCRIPTION	Commencing (C) 101 Part Number	Illus. No.	Quantity	MODIFICATIONS New Part Number	MODIFICATIONS Change Point	REMARKS
1	**Wheel—disc**	**1B8057**	1	5			
2	Cap—disc wheel	1G8084	2	4			
3	**Wheel—wire**	**1B8048**	3	5			
4	Rim—wire wheel	7H1804	4	5			
5	Spoke—long	7H1805	5	80			
6	Spoke—short	7H1806	6	160			
7	Nipple—spoke	7H1709	7	240			
8	Cap—wire wheel—RH side—LHT	1B8077	8	2			
9	Cap—wire wheel—LH side—RHT	1B8078		2			
10	Cap—wire wheel—RH side—LHT] **W. Germany and Switzerland**	AHH8008	9	2			
11	Cap—wire wheel—LH side—RHT] **W. Germany and Switzerland**	AHH8009		2			
12	Weight—wheel balance—½ oz. (14·17 g.)	1B8036	10	A/R			
13	Weight—wheel balance—1 oz. (28·35 g.)	1B8037		A/R			
14	Weight—wheel balance—1½ oz. (42·52 g.)	1B8038		A/R			
15	Weight—wheel balance—2 oz. (56·70 g.)	1B8039		A/R			
16	Weight—wheel balance—2½ oz. (70·87 g.)	1B8040		A/R			
17	Weight—wheel balance—3 oz. (85·05 g.)	1B8041		A/R	WSE AKF 1458	PAU 2575	
18	**Disc assembly—wheel—RH (Ace Mercury)**	**BHA4167**		2			] **Optional extra**
19	**Disc assembly—wheel—LH (Ace Mercury)**	**BHA4168**		2			] **Optional extra**

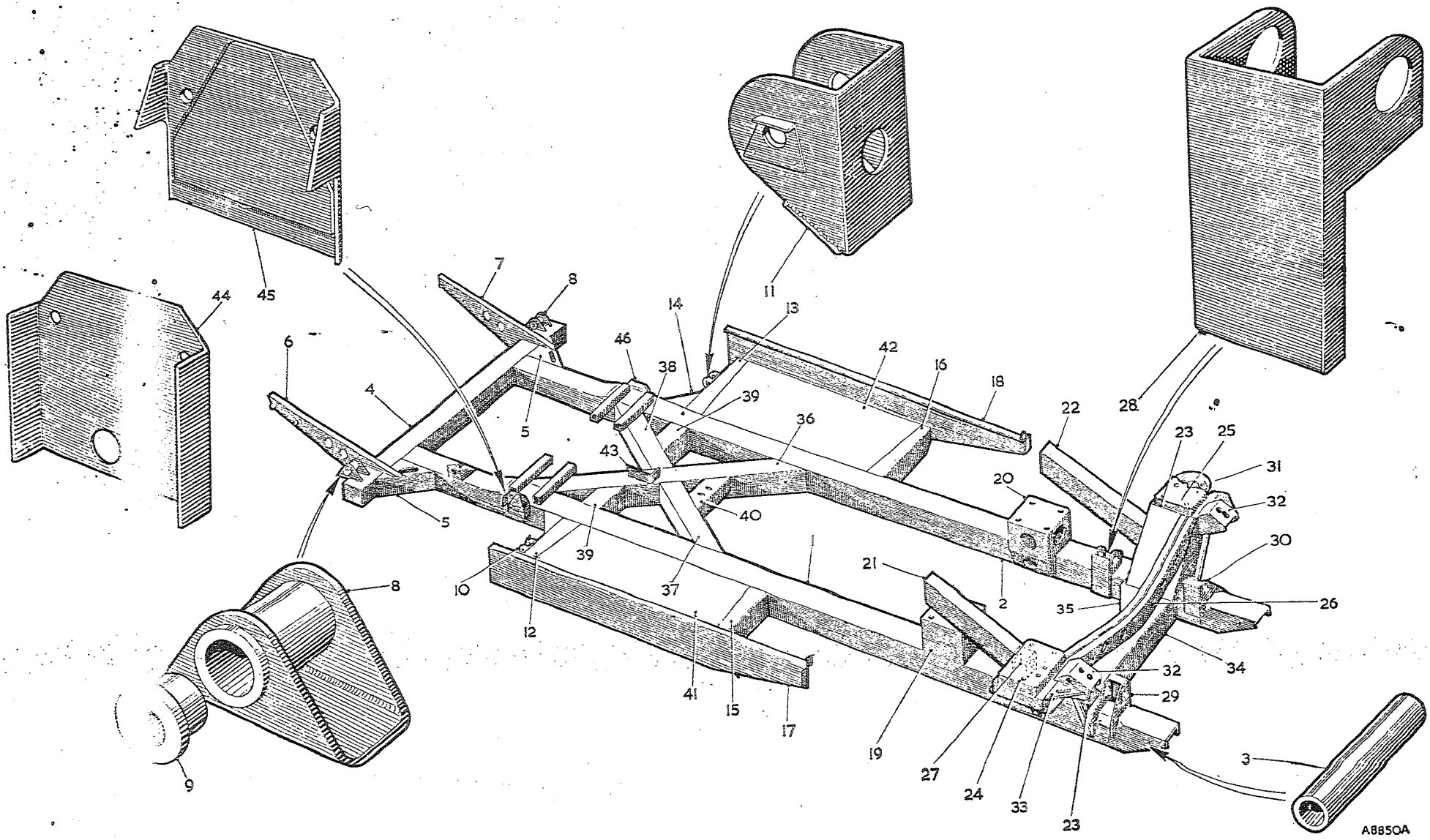

To face page R.1

Item No.	DESCRIPTION		Commencing (C) 101 Part Number	Commencing (C) 101 Illus. No.	Quantity	MODIFICATIONS New Part Number	MODIFICATIONS Change Point	REMARKS
	BODY SHELL							
1	**Shell—body—primed**	BN7	AHB 8781		1	8G9101	Com. (C) 13751	AHB8781, 8G9101 not available; use 8G9134
2	**Shell—body—primed (West Germany and Sweden)**	BN7			1	8G9134	Com. (C) 16039	
3	**Shell—body—primed**	BT7	AHB 8747		1	~~8G9132~~ N.L.A.	Com. (C) 15163	
4	**Shell—body—primed (West Germany and Sweden)**	BT7			1	8G9139	Com. (C) 16039	
						~~8G9102~~ N.L.A.	Com. (C) 13751	
						~~8G9135~~ N.L.A.	Com. (C) 15881	
						~~8G9133~~ N.L.A.	Com. (C) 15163	
						~~8G9160~~ N.L.A.	Com. (C) 15881	
5	**Frame assembly—chassis with front end assembly and rear end assembly**	BN7	AHB 8742		1	~~8G9103~~ N.L.A.	Com. (C) 13751	
						~~8G9141~~ N.L.A.	Com. (C) 16039	
6	**Frame assembly—chassis with front end assembly and rear end assembly**	BT7	AHB 8745		1	8G9104	Com. (C) 13751	AHB8745 not available; use 8G9104
						8G9142	Com. (C) 15881	
7	**Frame—chassis**	BN7	AHB 8741		1	AHB9081		AHB8741 not available; use AHB9081
8	**Frame—chassis**	BT7	AHB 8744		1	AHB9074	Com. (C) 13751 WSE AHB 9999 (PAU 2575)	AHB8744 not available; use AHB9074 WSE AHB 9999
9	Side member—RH		11B 5202	1	1			
10	Side member—LH		11B 5205	2	1			
11	Tube—front bumper mounting		11B5212	3	4			
12	Crossmember—rear		1B8641	4	1			
13	Gusset—rear crossmember		1B8658	5	2			
14	Bracket—rear bumper—RH		11B5252	6	1			
15	Bracket—rear bumper—LH		11B5254	7	1			
16	**Bracket—rear spring rear**		**1B8648**	**8**	**2**			
17	Bush—shackle pin		1G9800	9	4			
18	Bracket—rear spring front—RH		1B8688	10	1			
19	Bracket—rear spring front—LH		1B8689	11	1			
20	Bracket—body mounting rear—RH		11B5255	12	1			
21	Bracket—body mounting rear—LH		11B5228	13	1	AHB 6001		PAU 3540
22	Gusset—body bracket		1B8693	14	2			
23	Bracket—body mounting front—RH		1B8698	15	1			
24	Bracket—body mounting front—LH		1B8699	16	1	AHB 9988		PAU 2570
25	Sill—body—RH		11B5264	17	1			
26	Sill—body—LH		11B5265	18	1			
27	Platform—engine front mounting—RH		11B5213	19	1			
28	Platform—engine front mounting—LH		11B5216	20	1			
29	Strut—engine bearer—RH		1B8670	21	1			
30	Strut—engine bearer—LH		1B8672	22	1			

Item No.	DESCRIPTION	Commencing (C) 101 Part Number	Illus. No.	Quantity	MODIFICATIONS New Part Number	MODIFICATIONS Change Point	REMARKS
	Body shell—*continued*						
1	Housing—front suspension	1B8766	23	2			
2	Adaptor—suspension housing—RH	1B8839	24	1			
3	Adaptor—suspension housing—LH	1B8840	25	1			
4	Support—suspension housing	11B5208	26	1			
5	Bracket—lower link—rear—RH	11B5251	27	1			
6	Bracket—lower link—rear—LH	1B8685	28	1			
7	Bracket—lower link—front—RH	11B5218	29	1			
8	Bracket—lower link—front—LH	11B5220	30	1			
9	Cup—bumper	1A9203	31	2			
10	Bracket—steering	1B8731	32	2			
11	Gusset—steering bracket	11B5148	33	2			
12	Crossmember—front	1B8703	34	1			
13	Gusset—front crossmember	1B8777	35	2			
14	**Member complete—cross brace**	**11B5119**		1			
15	Cross brace—main beam	11B5120	36	1			
16	Cross brace—half beam front	11B5123	37	1			
17	Cross brace—half beam rear	11B5126	38	1			
18	Stiffener—cross brace	11B5128	39	2			
19	Member—engine rear mounting support	11B5117	40	1			
20	Panel—side floor—RH	11B5223	41	1	AHB9008	Com. (C) 13751	11B5223 not available; use AHB9008
21	Panel—side floor—LH	11B5224	42	1	AHB9009	Com. (C) 13751	11B5224 not available; use AHB9009
22	Bracket—handbrake	11B5236	43	1			
23	Bracket—rear shock absorber mounting—RH **BN7**	11B5530	44	1			
24	Bracket—rear shock absorber mounting—RH **BT7**	11B5231	45	1			
25	Bracket—rear shock absorber mounting—LH **BN7**	11B5534		1			
26	Bracket—rear shock absorber mounting—LH **BT7**	11B5232	46	1			

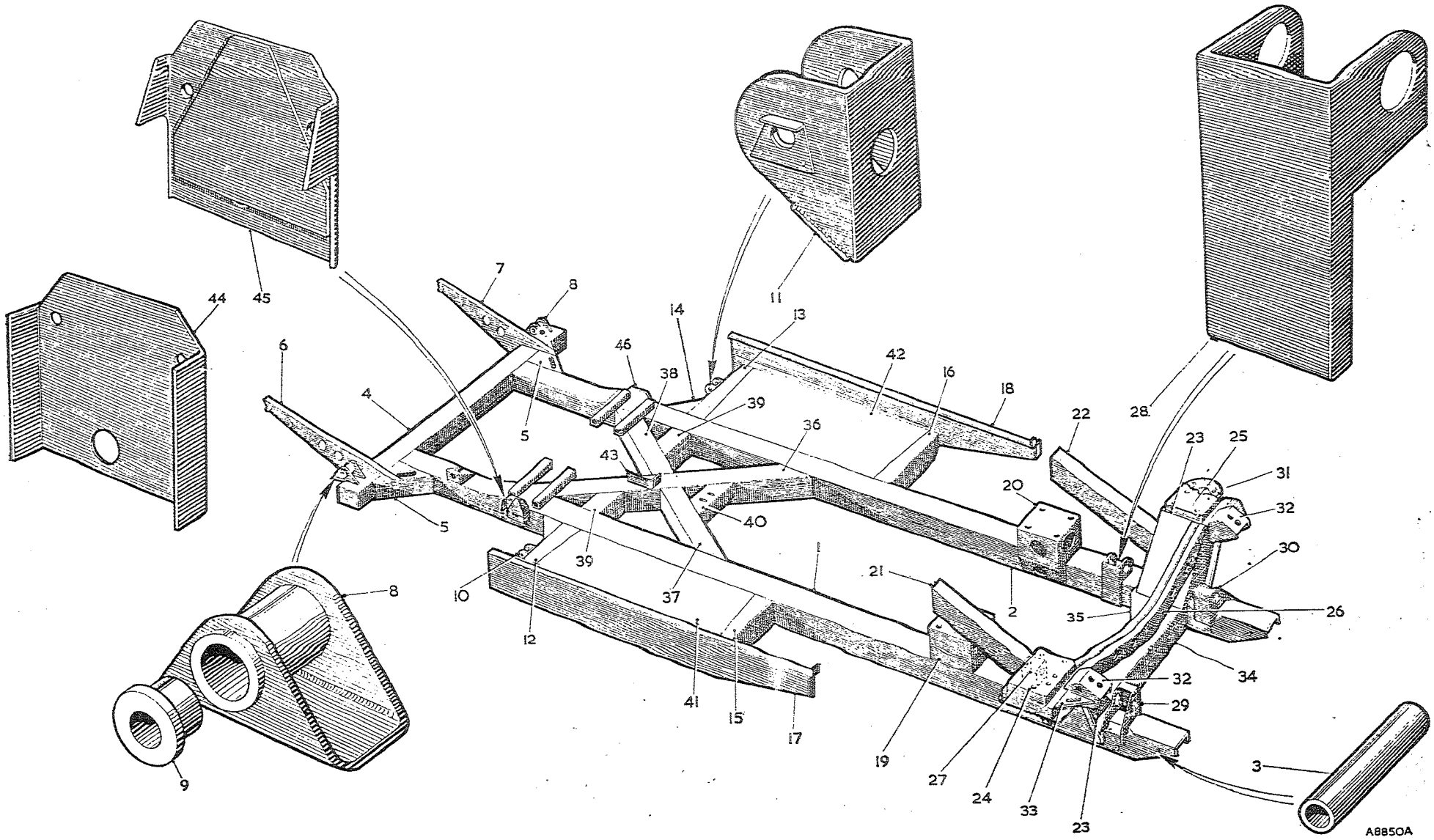

To face page R.2

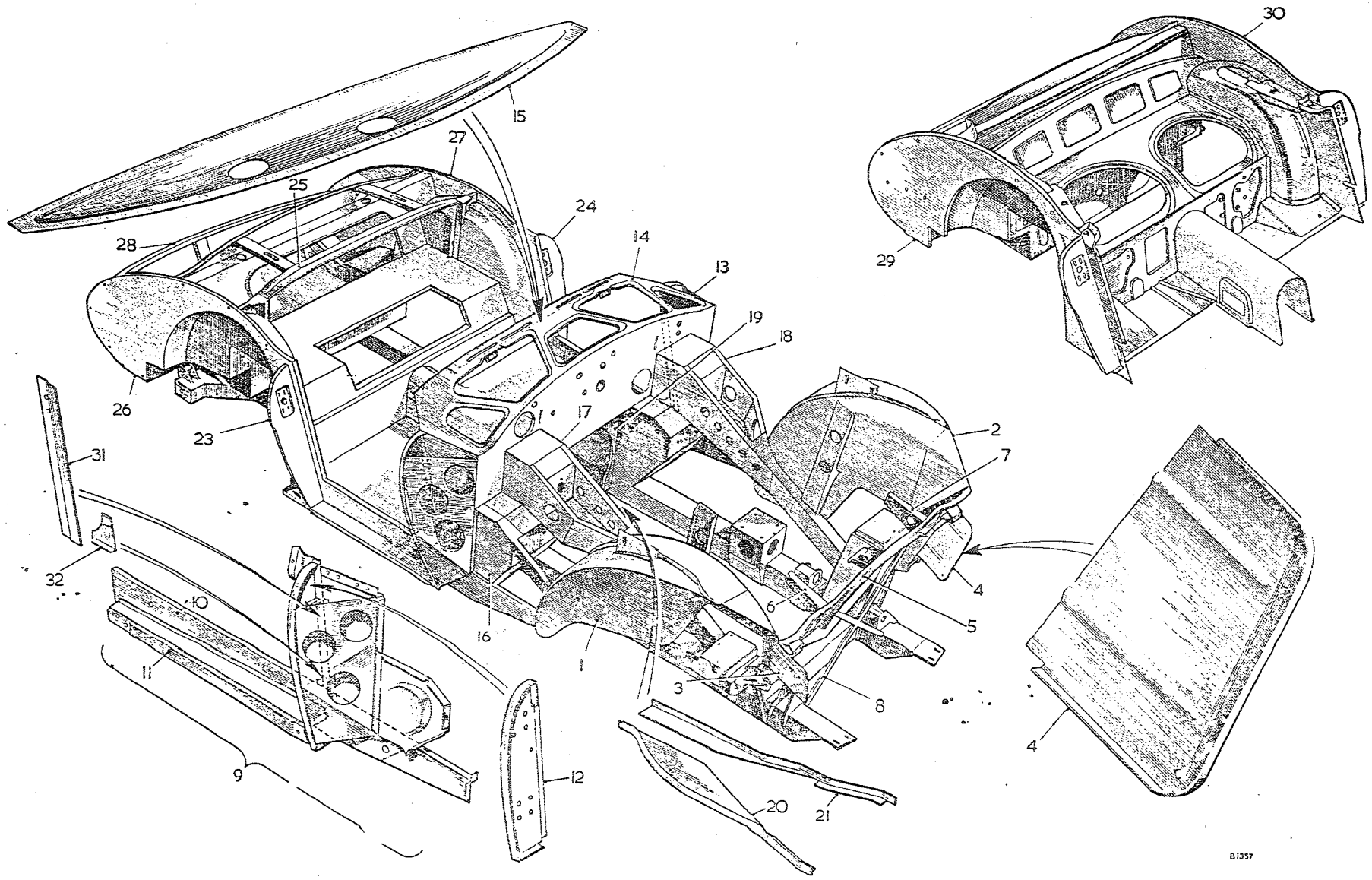

To face page R.3

Item No.	DESCRIPTION	Commencing (C) 101 Part Number	Illus. No.	Quantity	MODIFICATIONS New Part Number	MODIFICATIONS Change Point	REMARKS
	Body shell—*continued*						
1	**Front end assembly**	**AHB5391** wse 8G 9105		1	**8G9105** **AHB9128**	**Com. (C) 13751** **Com. (C) 16039 BN7, 15881 BT7**	(PAU 2575)
2	Wheel arch assembly—RH	4B7427	1	1			
3	Wheel arch assembly—LH	4B7428	2	1			
4	Panel—splash—wheelarch—RH	14B6461	3	1			
5	Panel—splash—wheelarch—LH	14B6462	4	1			
6	**Cowl and cross brace assembly**	**4B9352**	5	1			
7	Bracket—radiator steady—RH	14B5811	6	1			
8	Bracket—radiator steady—LH	14B5812	7	1			
9	Cross brace assembly—centre	4B9366	8	1			
10	**Scuttle side panel assembly—RH**	**4B9356**	9	1			
11	Sill inner panel—RH	14B5809	10	1			
12	Sill outer panel—RH	14B5749	11	1			
13	Hinge pillar assembly—RH	4B9354	12	1			
14	**Scuttle side panel assembly—LH**	**4B9357**	13	1			
15	Sill inner panel—LH	14B5810		1			
16	Sill outer panel—LH	14B5750		1			
17	Hinge pillar assembly—LH	4B9355		1			
18	**Scuttle top inner panel**	**4B9358**	14	1			
19	Demister channel assembly	4B9365	15	1			
20	**Dash and pedal box assembly**	**4B9359**	16	1	**8G9106** **8G9143**	**Com. (C) 13751** **Com. (C) 16039 BN7, 15881 BT7**	
21	Pedal accommodation box assembly—RH	AHB8953	17	1			
22	Pedal accommodation box assembly—LH	AHB8954	18	1			
23	Panel—reinforcement—gearbox cover extension assembly	AHB8285	19	1		Fin. (C) 16038 BN7	
24	Panel—reinforcement—pedal box sides			1	AHB9169	Com. (C) 16039 BN7, 15881 BT7	
25	Sealing flange—tunnel—RH		20	1	AHB9170		
26	Sealing flange—tunnel—LH		21	1	AHB9171		
27	Extension plate—scuttle side panel—RH	24B1682	31	1			
28	Extension plate—scuttle side panel—LH	24B1683		1			
29	Gusset plate—scuttle side to sill	24B1684	32	2			

Item No.	DESCRIPTION		Commencing (C) 101 Part Number	Illus. No.	Quantity	MODIFICATIONS New Part Number	Change Point	REMARKS
	Body shell—*continued*							
1	**Rear end assembly**	BN7	**4B2050** NSE	AHB 9082	1	**AHB9082**	**Com. (C) 13751**	LPAU 3575
2	Shut pillar assembly—RH	BN7	AHB5392	23	1			
3	Shut pillar assembly—LH	BN7	AHB5393	24	1			
4	Rail reinforcement assembly	BN7	AHB5394	25	1			
5	Rear quarter inner panel assembly—RH	BN7	AHB5395	26	1			
6	Rear quarter inner panel assembly—LH	BN7	AHB5396	27	1			
7	Rear skirt rail assembly	BN7	4B9364	28	1			
8	**Rear end assembly**	BT7	**AHB8505**		1	**AHB9076**	**Com. (C) 13751**	
9	Shut pillar assembly—RH	BT7	AHB5392	23	1			
10	Shut pillar assembly—LH	BT7	AHB5393	24	1			
11	Rear quarter inner panel assembly—RH	BT7	AHB8955	29	1			
12	Rear quarter inner panel assembly—LH	BT7	AHB8956	30	1			
13	Rear skirt rail assembly	BT7	4B9364	28	1			

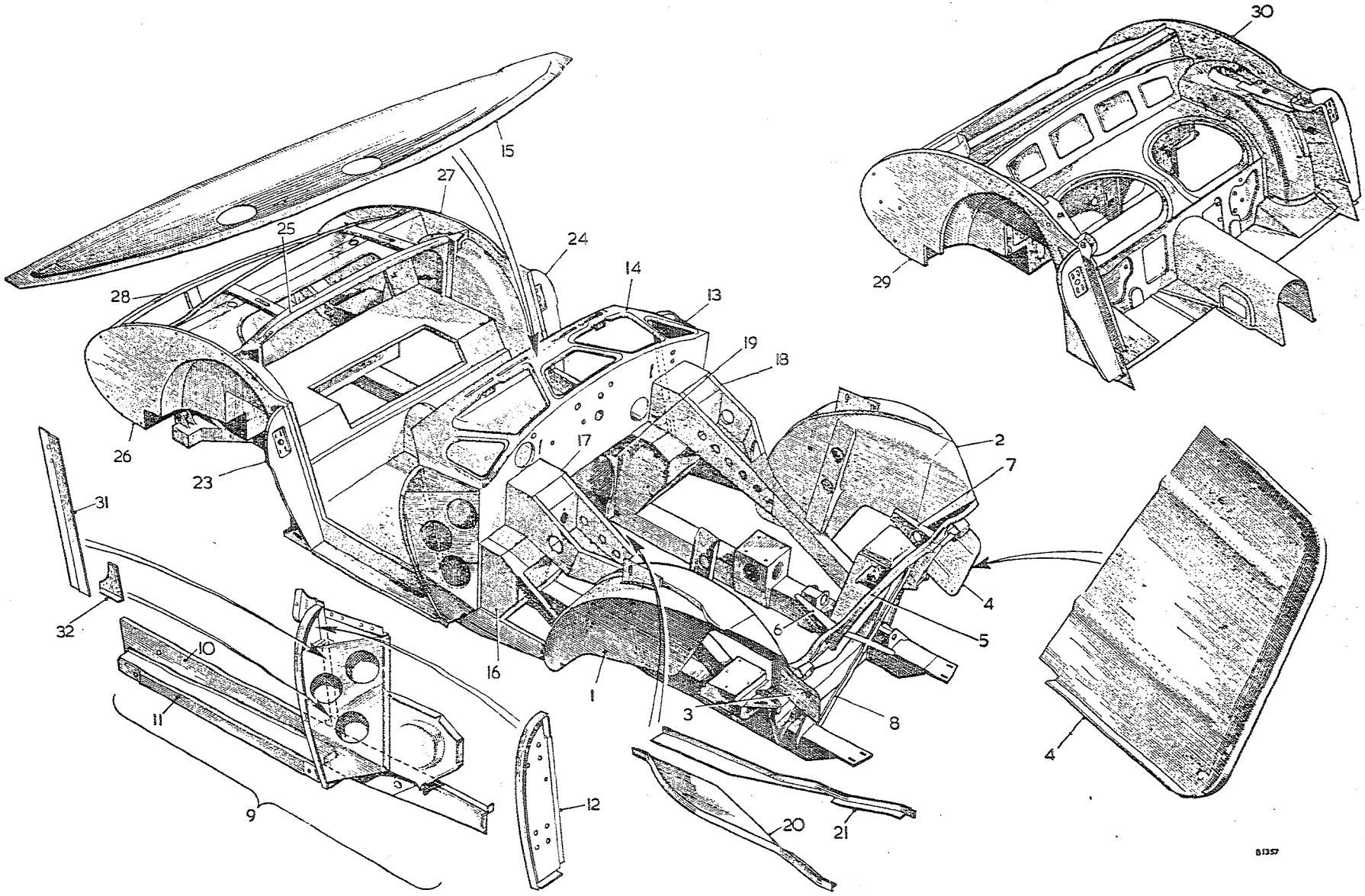

To face page R.4

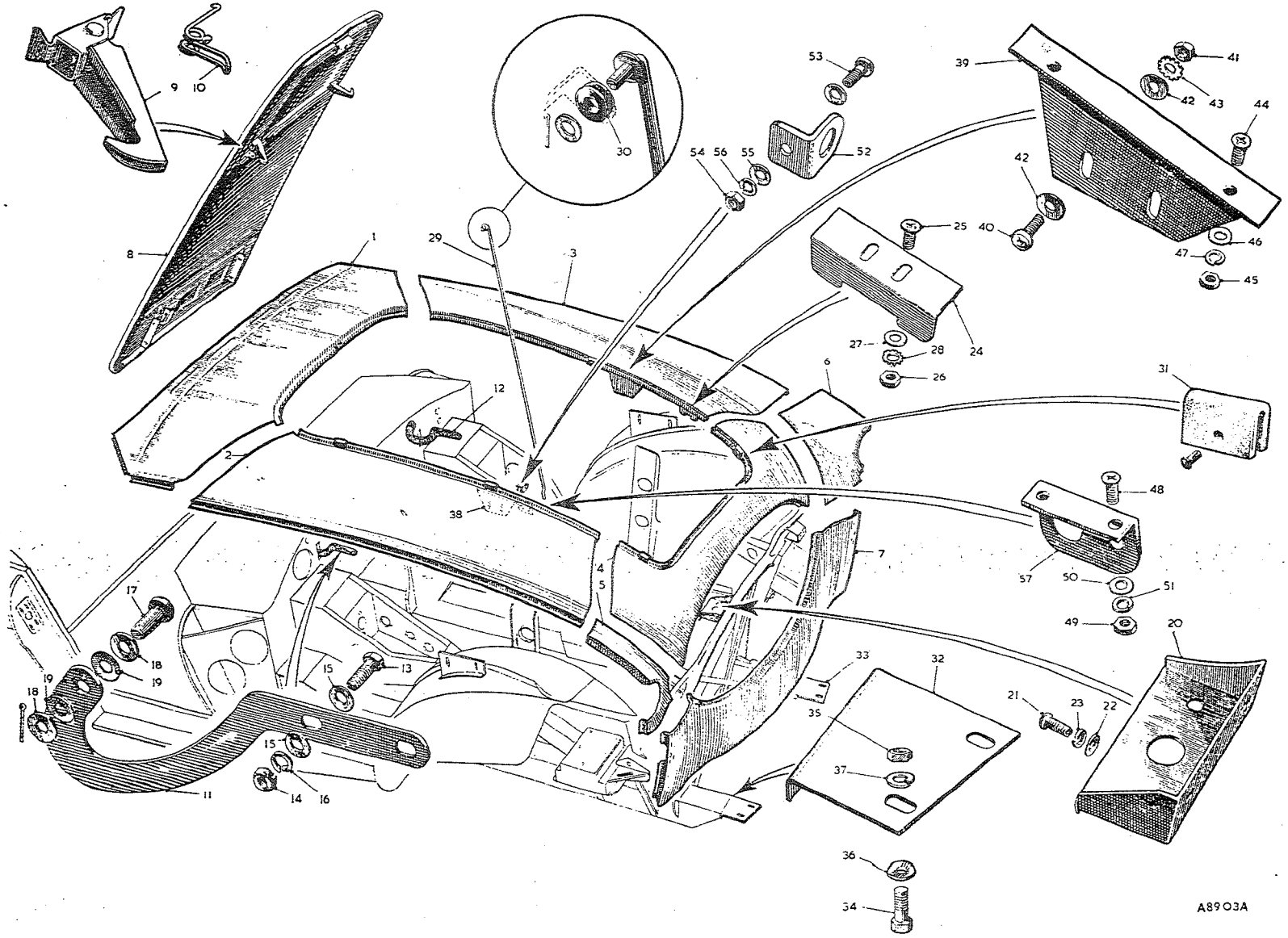

To face page R.5

Item No.	DESCRIPTION	Commencing (C) 101 Part Number	Illus. No.	Quantity Q	MODIFICATIONS New Part Number	MODIFICATIONS Change Point	REMARKS
	Body shell—*continued*						
1	**Bonnet surround assembly**	**4B1085**		1			
2	**Bonnet surround assembly** ..... **West Germany and Sweden**			1	**AHB9212**	**Com. (C) 15163**	
3	Scuttle top outer panel	14B5722	1	1			
4	Front wing inner panel—RH	14B5723	2	1			
5	Front wing inner panel—LH	14B5724	3	1			
6	Cowl front top panel	14B5725	4	1			
7	Cowl side panel—RH	14B5726	5	1			
8	Cowl side panel—LH	14B5727	6	1			
9	Cowl front bottom panel	14B5728	7	1			
10	Cowl front bottom panel ..... **West Germany and Sweden**			1	AHB9211	Com. (C) 15163	
11	Screw—surround to crossbrace	CMZ0308		3			
12	Washer—plain—screw	PWZ103		3			
13	Washer—spring—screw	LWZ203		3			
14	Nut—screw	FNZ103		3			
15	**Bonnet top assembly**	**4B1089**	8	1			
16	Hook assembly—bonnet	14A366	9	2			
17	Spring	4B8646	10	2			
18	Hinge—bonnet—RH	14G3692	11	1			
19	Hinge—bonnet—LH	14G3693	12	1			
20	Screw—hinge	HZS0406	13	4			
21	Nut—screw	FNZ104	14	4			
22	Washer—plain—nut	PWZ104	15	8			
23	Washer—spring—nut	LWZ204	16	4			
24	Pin—clevis	CLZ0511	17	2			
25	Washer—plain—pin	PWZ105	18	4			
26	Washer—anti-rattle—pin	AWZ105	19	4			
27	Bracket—bonnet lock support	14B5861	20	1			
28	Screw—bracket	PMZ0310	21	2			
29	Washer—plain—screw	PWZ103	22	2			
30	Washer—spring—screw	LWZ203	23	2			
31	Striker—bonnet hook safety catch	14B8812	24	2			
32	Screw—striker	CMZ0308	25	4			
33	Nut—screw	FNZ103	26	4			
34	Washer—plain—nut	PWZ203	27	4			
35	Washer—shakeproof—nut	LWZ503	28	4			
36	Rod—bonnet prop	AHB5748	29	1			
37	Ferrule (rubber)	2H1046	30	1			
38	Washer—plain—prop rod	PWZ105		1			
39	Buffer—bonnet surround (rubber)	14B766	31	5/4			] Quantity reduced at (C) 13751
40	Washer—plain—buffer	PWZ202		5/4			

Item No.	DESCRIPTION	Commencing (C) 101 Part Number	Commencing (C) 101 Illus. No.	Quantity	MODIFICATIONS New Part Number	MODIFICATIONS Change Point	REMARKS
	Body shell—*continued*						
1	Bracket—bonnet surround to chassis—RH	14B7661	32	1			
2	Bracket—bonnet surround to chassis—LH	14B7662	33	1			
3	Screw—bracket to cowl bottom panel	HZS0405	34	4			
4	Nut—screw	FNZ104	35	4			
5	Washer—plain—nut	PWZ104	36	8			
6	Washer—spring—nut	LWZ204	37	4			
7	Plate—bonnet opening support—RH	14B2005	38	1			
8	Plate—bonnet opening support—LH	14B2006	39	1			
9	Screw—plate	PMZ0308	40	4			
10	Nut—screw	FNZ103	41	4			
11	Washer—plain—nut	PWZ203	42	8			
12	Washer—shakeproof—nut	LWZ503	43	4			
13	Screw—plate	CMZ0308	44	4			
14	Nut—screw	FNZ103	45	4			
15	Washer—plain—nut	PWZ103	46	4			
16	Washer—spring—nut	LWZ203	47	4			
17	Bracket—support—bonnet prop rod	24B773	57	1			
18	Screw—bracket	CMZ0310	48	2			
19	Nut—screw	FNZ103	49	2			
20	Washer—plain—nut	PWZ103	50	2			
21	Washer—spring—nut	LWZ203	51	2			
22	Bracket—remote control rod support	14B6806	52	1			
23	Screw—bracket	PMZ0308	53	1			
24	Nut—screw	FNZ103	54	1			
25	Washer—plain—nut	PWZ103	55	2			
26	Washer—spring—nut	LWZ203	56	1			

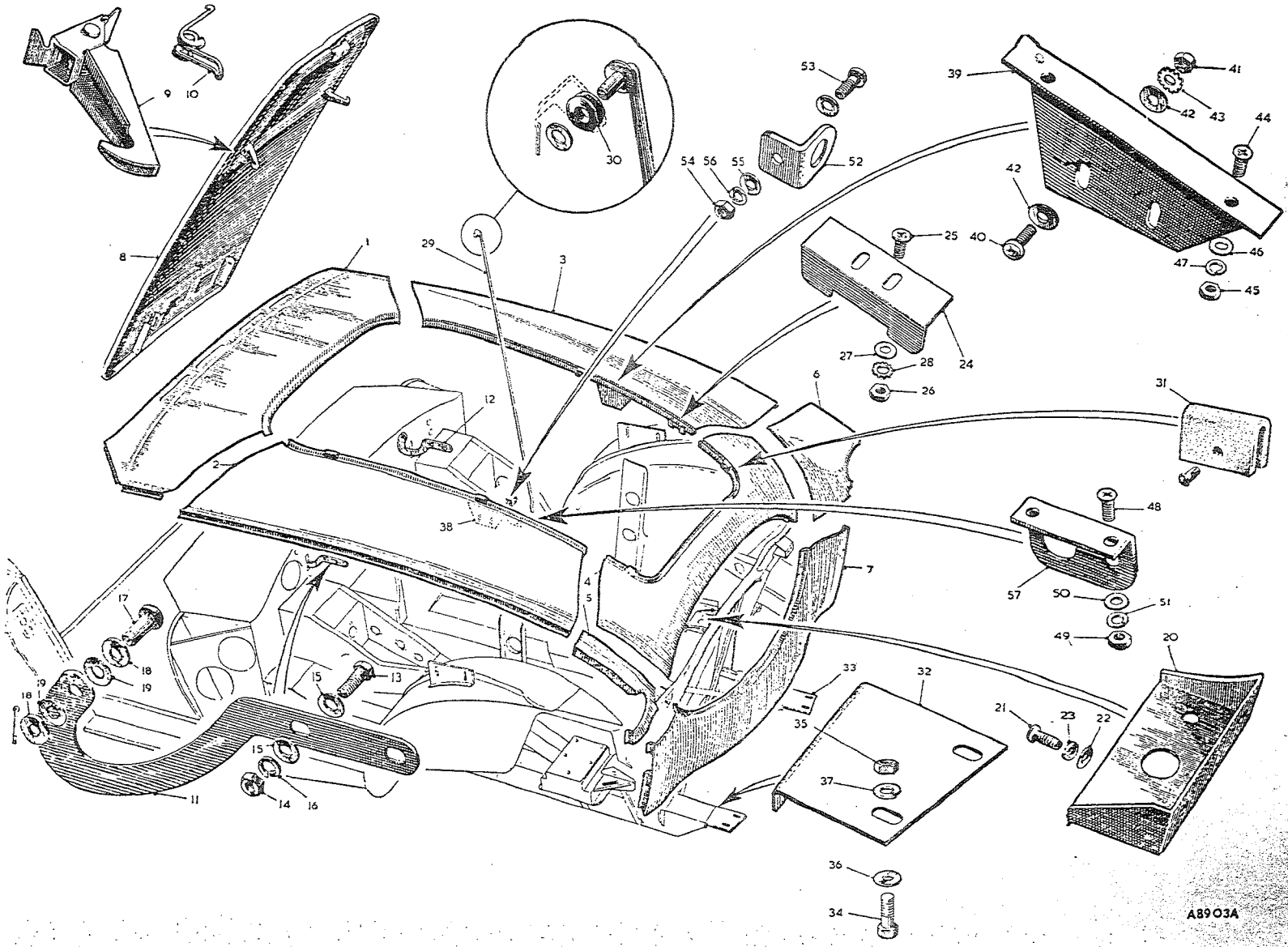

To face page R.6

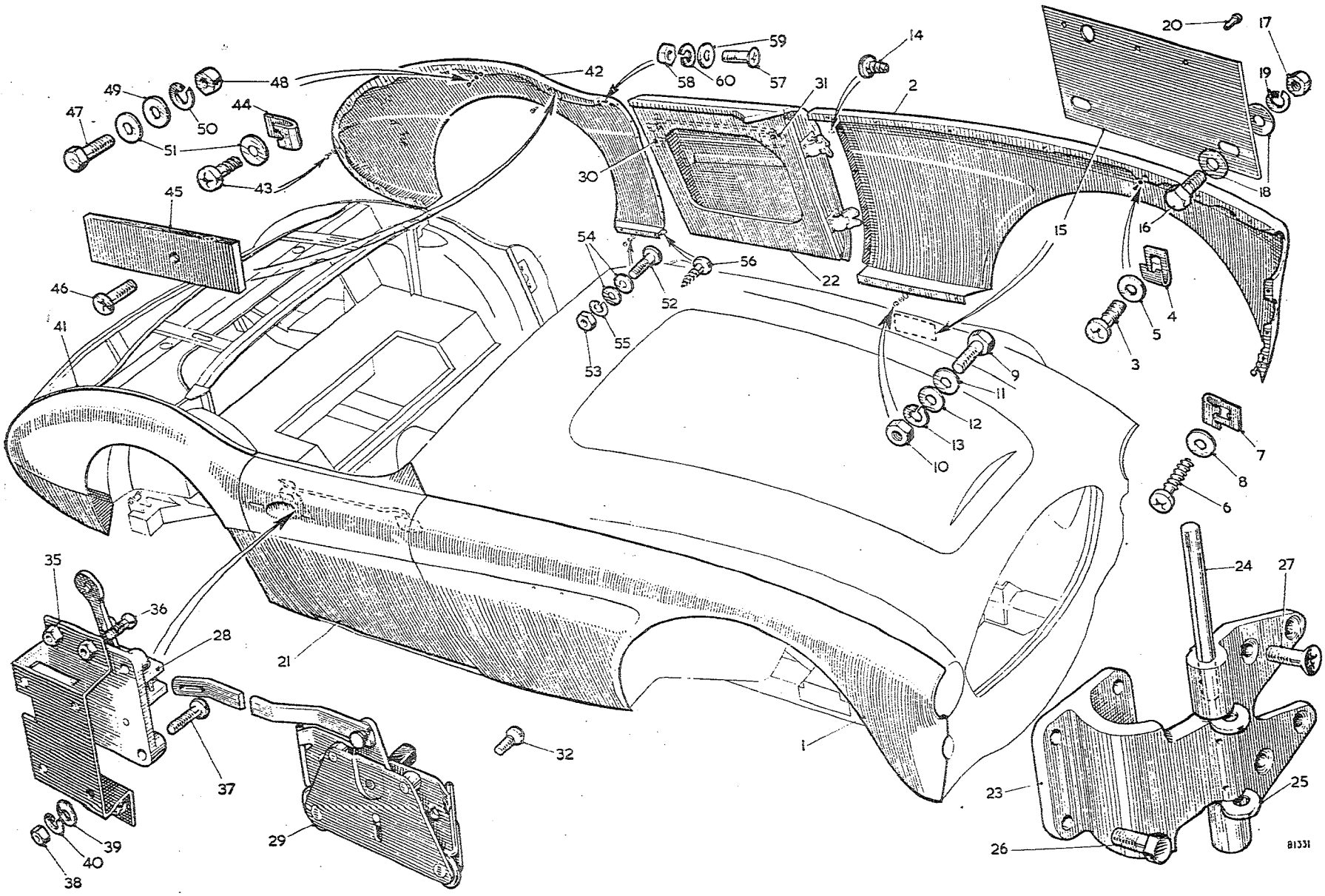

To face page R.7

Item No.	DESCRIPTION	Commencing (C) 101 Part Number	Illus. No.	Quantity	MODIFICATIONS New Part Number	MODIFICATIONS Change Point	REMARKS
	Body shell—*continued*						
1	**Wing assembly—RH**	**4B1087**	1	1			
2	**Wing assembly—LH**	**4B1088**	2	1			
3	Bolt—wing—$\frac{7}{8}$″ × $\frac{1}{4}$″ (22·22 × 6·35 mm.)	ABZ0407	3	14			
4	Nut—spire—bolt	6K9817	4	14			
5	Washer—plain—'D'—nut	2K9993	5	14			
6	Bolt—wing—$\frac{11}{16}$″ × $\frac{1}{4}$″ (17·46 × 6·35 mm.)	6K9818	6	6	ABZ0406		6K9818 not available; use ABZ0406
7	Nut—spire—bolt	PFS514	7	6			
8	Washer—plain—'D'—nut	2K9993	8	6			
9	Screw—wing—$\frac{3}{4}$″ × $\frac{1}{4}$″ (19·05 × 6·35 mm.)	HZS0406	9	6			
10	Nut—screw	FNZ104	10	6			
11	Washer—plain—'D'—nut	2K9993	11	6			
12	Washer—plain—nut	PWZ104	12	6			
13	Washer—spring—nut	LWZ204	13	6			
14	Screw—wing—No. 6 × $\frac{3}{8}$″ (9·52 mm.)	PTZ603	14	14			
15	Bracket—front wing support	14B6453	15	2			
16	Screw—bracket	HZS0406	16	4			
17	Nut—screw	FNZ104	17	4			
18	Washer—special—nut	2K9051	18	8			
19	Washer—spring—nut	LWZ204	19	4			
20	Rivet	DMP1239	20	6			Part No. change; was 6K9717
21	**Door shell assembly—RH**	**4B1083**	21	1			
22	**Door shell assembly—LH**	**4B2053**	22	1			
23	**Hinge—door**	**14B5896**	23	4			
24	Pin—hinge	14B3732	24	4			
25	Washer—hinge pin	2K9005	25	8			
26	Screw—hinge to door	HZS0508	26	16			
27	**Lock unit—RH**	**14B7481**	28	1			
28	**Remote control unit—RH**	**14B6822**	29	1			
29	**Lock unit—LH**	**14B7482**	30	1			
30	**Remote control unit—LH**	**14B6823**	31	1			
31	Screw—lock and remote control	CPZ0306	32	6			
32	Bracket—lock mounting—RH	14B7483	35	1			
33	Bracket—lock mounting—LH	14B7484		1			
34	Screw—bracket to door	CMZ0308	36	4			
35	Screw—lock to bracket	RMZ0310	37	8			
36	Nut—screw	FNZ103	38	8			
37	Washer—plain—nut	PWZ103	39	8			
38	Washer—spring—nut	LWZ203	40	8			
39	Screw—hinge to body	CMZ0516	27	16			

Item No.	DESCRIPTION	Commencing (C) 101 Part Number	Illus. No.	Quantity	MODIFICATIONS New Part Number	MODIFICATIONS Change Point	REMARKS
	Body shell—*continued*						
1	**Rear quarter panel assembly—RH**	**4B1091**	41	1			
2	**Rear quarter panel assembly—LH**	**4B1092**	42	1			
3	Bolt—rear quarter panel	ABZ0407	43	13			
4	Nut—spire—bolt	6K9817	44	13			
5	Plate—tapped	14B2546	45	2			
6	Screw—$\frac{1}{4}$″ × $\frac{5}{8}$″ (6·35 × 15·87 mm.)	CMZ0410	46	2			
7	Screw—$\frac{1}{4}$″ × $\frac{3}{4}$″ (6·35 × 19·05 mm.)	HZS0406	47	1			
8	Nut—screw	FNZ104	48	1			
9	Washer—plain—screw	PWZ104	49	1			
10	Washer—spring—screw	LWZ204	50	1			
11	Washer—plain—'D'—screw	2K9993	51	14			
12	Screw—No. 10 × $\frac{5}{8}$″ (15·87 mm.)	PMZ0310	52	4			
13	Nut—screw	FNZ103	53	4			
14	Washer—plain—screw	PWZ103	54	8			
15	Washer—spring—screw	LWZ203	55	4			
16	Screw—No. 8 × $\frac{5}{8}$″ (15·87 mm.)	PTZ805	56	2			
17	Screw—No. 10 × $\frac{1}{2}$″ (12·7 mm.)	CMZ0308	57	16			
18	Nut—screw	FNZ103	58	16			
19	Washer—plain—screw	PWZ203	59	16			
20	Washer—spring—screw	LWZ203	60	16			

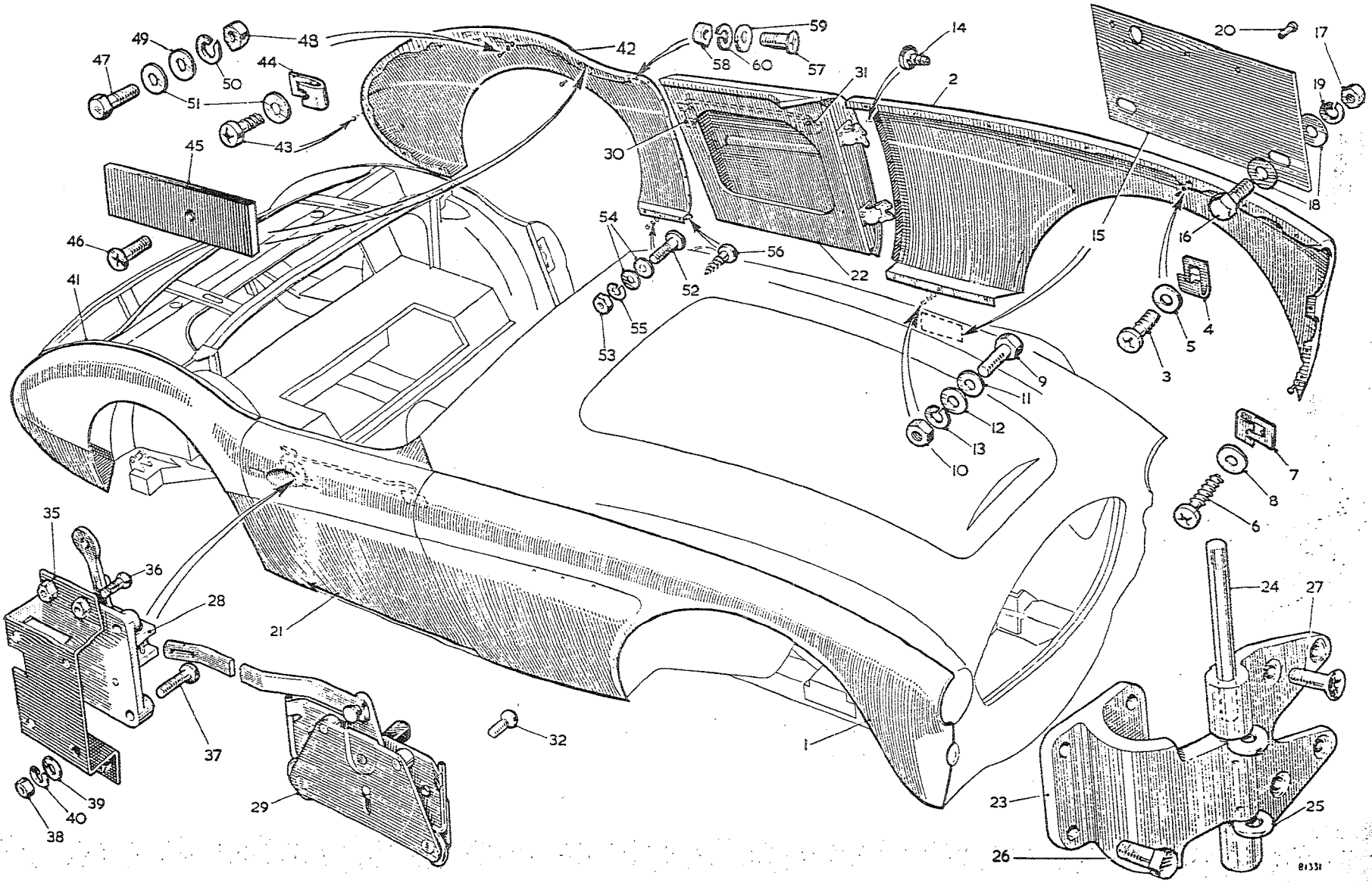

To face page R.8

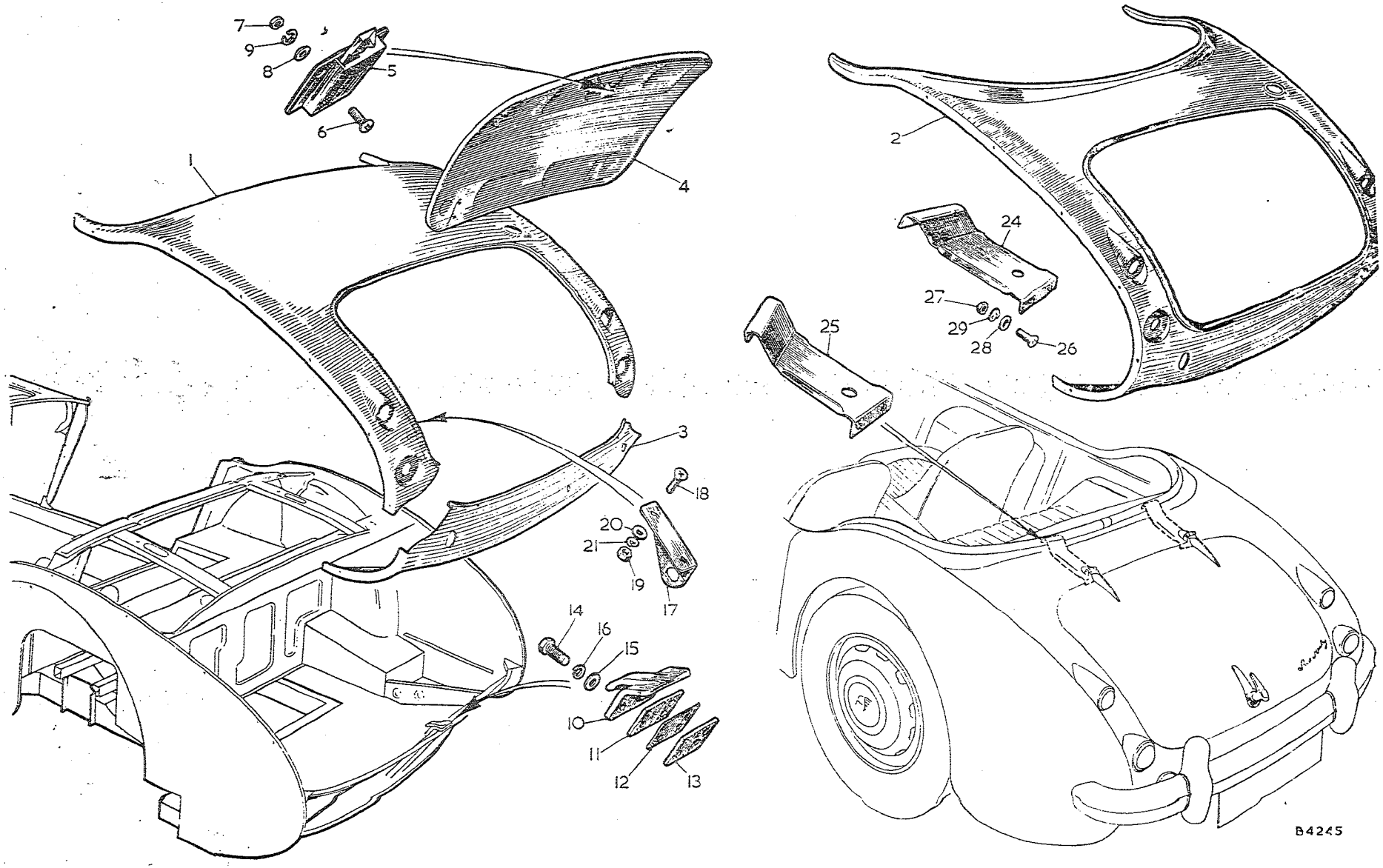

To face page R.9

Item No.	DESCRIPTION		Commencing (C) 101 Part Number	Illus. No.	Quantity	MODIFICATIONS New Part Number	MODIFICATIONS Change Point	REMARKS
	Body shell—*continued*							
1	**Tonneau assembly**	BN7	4B2048	1	1			
2	**Tonneau assembly—W. Germany and Sweden**	BN7			1	AHB9216	Com. (C) 15163	
3	**Tonneau assembly**	BT7	4B1086	2	1			
4	**Tonneau assembly—W. Germany and Sweden**	BT7			1	AHB9215	Com. (C) 15163	
5	Panel—rear skirt		14B5739	3	1			
6	**Lid—boot**		4B1090	4	1			
7	Lock		14B1718	5	1			
8	Screw fixing lock		CMZ0412	6	4			
9	Nut—screw		FNZ104	7	4			
10	Washer—plain—nut		PWZ104	8	4			
11	Washer—spring—nut		LWZ204	9	4			
12	Striker—boot lid		14B1719	10	1			
13	Plate—packing		14B2809	11	A/R			
14	Packing piece		14B6817	12	1			
15	Plate—tapped		14B2038	13	1			
16	Screw fixing striker		HZS0407	14	3			
17	Washer—plain—screw		PWZ104	15	3			
18	Washer—spring—screw		LWZ204	16	3			
19	Bracket—prop rod support		14B6467	17	1			
20	Screw fixing bracket		CMZ3008	18	2			
21	Nut—screw		FNZ103	19	2			
22	Washer—plain—nut		PWZ103	20	2			
23	Washer—spring—nut		LWZ203	21	2			
24	Bracket—reinforcement—RH	BT7	14B9662	24	1			
25	Bracket—reinforcement—LH	BT7	14B9663	25	1			
26	Screw fixing bracket	BT7	CMZ0308	26	4			
27	Nut—screw	BT7	FNZ103	27	4			
28	Washer—plain—nut	BT7	PWZ103	28	4			
29	Washer—spring—nut	BT7	LWZ203	29	4			

Item No.	DESCRIPTION	Commencing (C) 101 Part Number	Illus. No.	Quantity	MODIFICATIONS New Part Number	MODIFICATIONS Change Point	REMARKS
	Body shell—*continued*						
1	Cover assembly—gearbox	AHB8377	1	1			
2	Screw—cover	PTZ806	2	4			
3	Rubber—gearbox cover sealing	14B5623	3	1			
4	Plug—gearbox cover (rubber)	4G4920	4	1		Fin. (C) 16038 BN7, 15880 BT7	
5	Extension assembly—gearbox cover	AHB8381	5	1			
6	Screw—extension—1″ (25·4 mm.)	PTZ808	6	13			
7	Screw—extension—¾″ (19·05 mm.)	PTZ806	7	4			
8	Cover—gearbox (fibreglass)		8	1	AHB9176		
9	Plate—tapped—ash tray container		9	1	14B5711		
10	Screw—plate to cover		10	1	CMZ0208	Com. (C) 16039 BN7, 15881 BT7	
11	Nut—screw		11	1	CNZ102		
12	Washer—shakeproof—nut		12	1	AJD7622		
13	Fastener—durable dot	2H5133	13	4/9	ADB4811		2H5133 not available; use ADB4811 — Quantity increased at (C) 16039 BN7 15881 BT7
14	Screw fixing fastener	CMZ0208	14	4/9			
15	Nut—screw	CNZ102	15	4/9			
16	Washer—shakeproof—nut	AJD7622	16	4/9			
17	Seal—mounting flange—gearbox cover		17	2	AHB9192	Com. (C) 16039 BN7, 15881 BT7	
18	Seal—gearbox cover—thin—front		18	1	AHB9179	Com. (C) 16039 BN7, 15881 BT7 Fin. (C) 18005 BN7, 18079 BT7	AHB9179 not available; use AHB9512
19	Seal—gearbox cover—thick—front			1	AHB9512	Com. (C) 18006 BN7, 18080 BT7	
20	Seal—gearbox cover—thin—rear		19	1	AHB9178	Com. (C) 16039 BN7, 15881 BT7 Fin. (C) 18005 BN7, 18079 BT7	AHB9178 not available; use AHB9511
21	Seal—gearbox cover—thick—rear			1	AHB9511	Com. (C) 18006 BN7, 18080 BT7	
22	Screw fixing gearbox cover—⅞″ (22·22 mm.)		20	6	PTZ807		
23	Screw fixing gearbox cover—1″ (25·4 mm.)			2	PTZ808		
24	Washer—plain—screw		21	8	AJD7202	Com. (C) 16039 BN7, 15881 BT7	Part No. change; was 53K3157
25	Grommet—tunnel fixing		22	8	AHB9268		
26	Grommet—gear lever	14B6877	23	1	~~AHB9177~~ AHB9510		AHB9177 not available; use AHB9510
27	Ring—gear lever grommet		24	1	AHH5388		
28	Plug—gearbox cover (rubber)		25	2	4G4920	Com. (C) 16039 BN7, 15881 BT7	
29	Plug—speedometer flex hole blanking		26	1	RFR220		

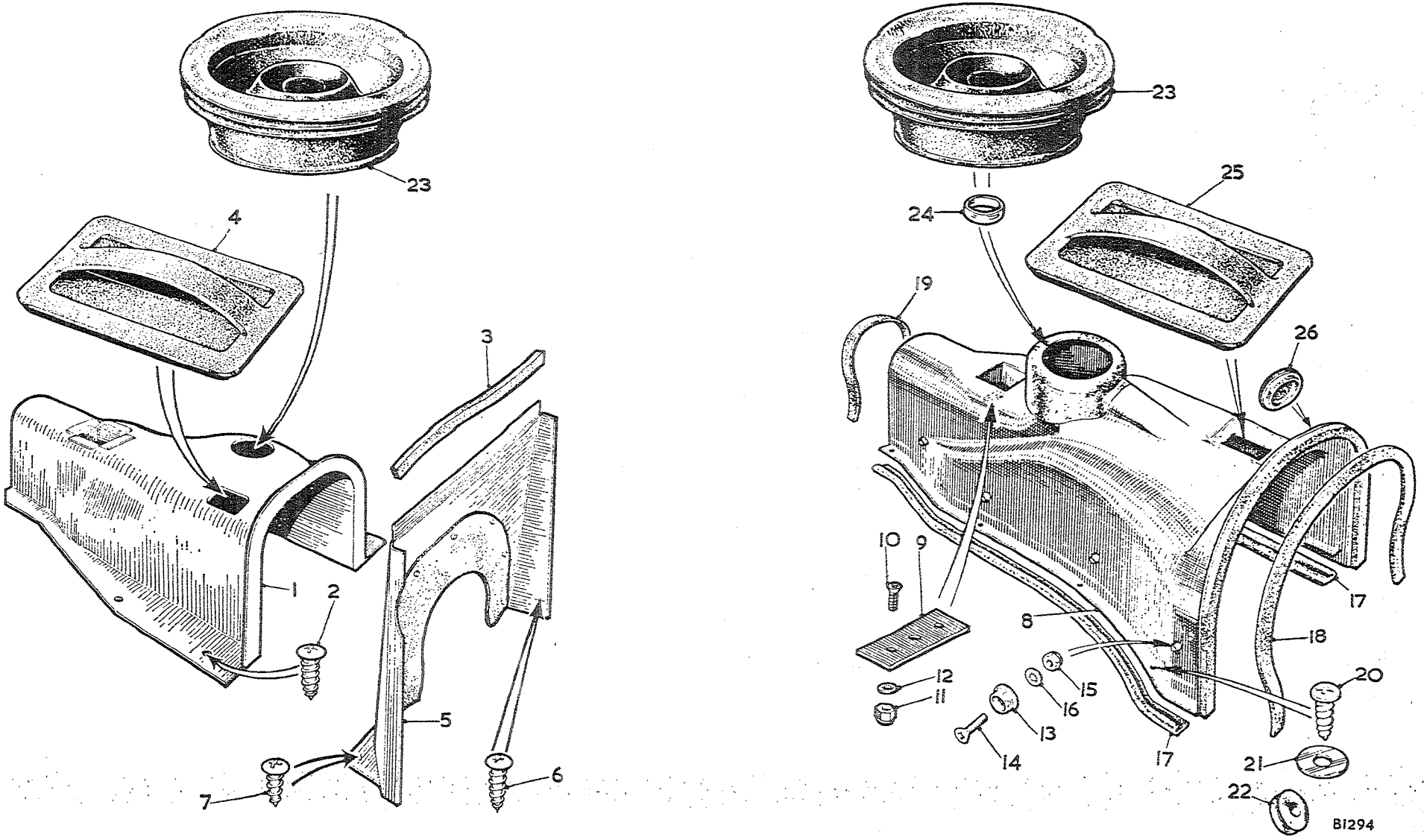

To face Page R.10

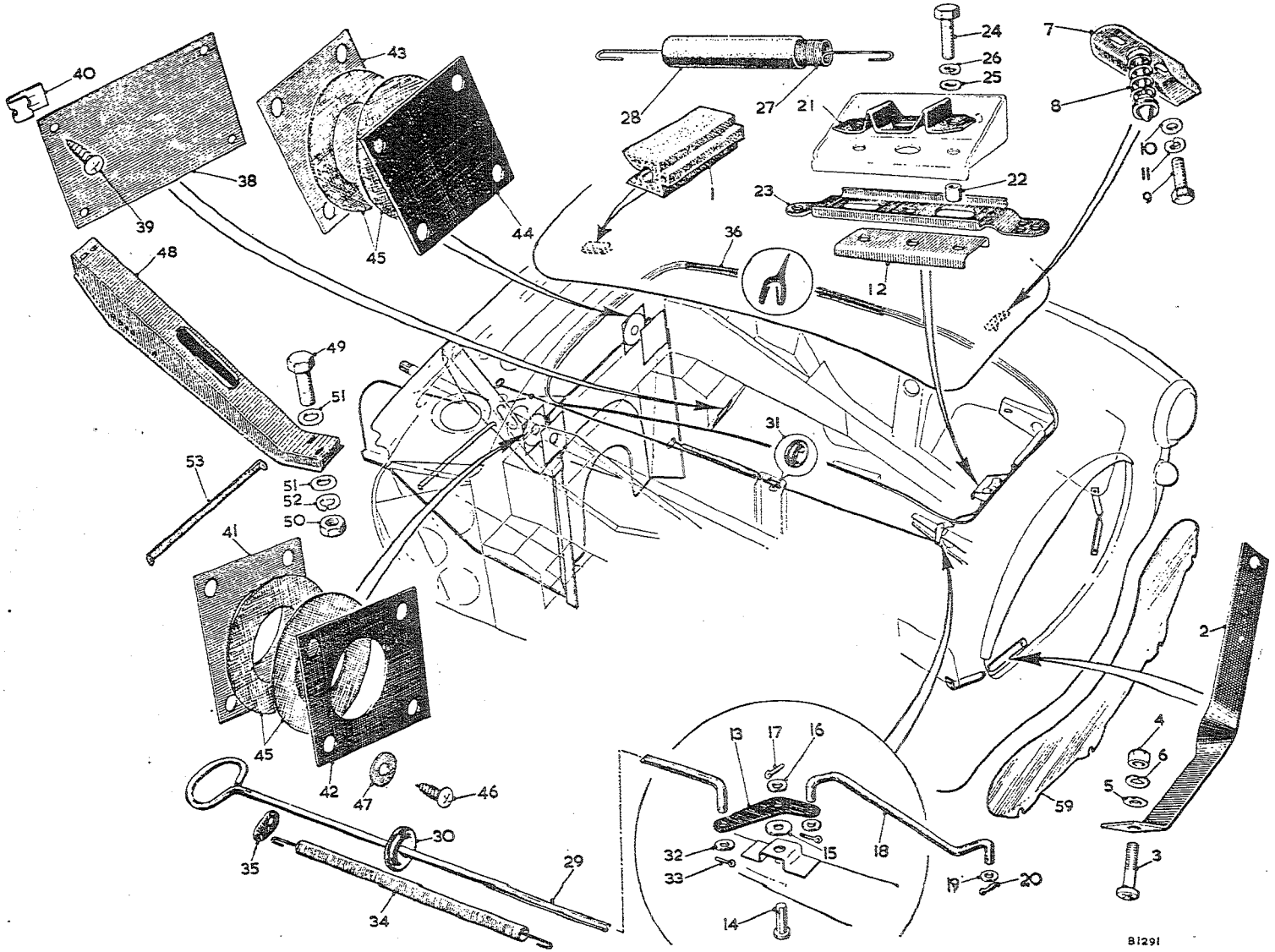

To face page R.11

Item No.	DESCRIPTION	Commencing (C) 101 Part Number	Illus. No.	Quantity	MODIFICATIONS New Part Number	MODIFICATIONS Change Point	REMARKS
	Body shell—*continued*						
1	Stop—bonnet prop rod (rubber)	2H9215	1	1			
2	Bracket—steady—front wheelarch splash panel	14B8813	2	2	AHB9245	Com. (C) 16173 BN7, 16204 BT7	
3	Screw—bracket	PMZ0306	3	2			
4	Nut—screw	FNZ103	4	2			
5	Washer—plain—nut	PWZ103	5	2			
6	Washer—spring—nut	LWZ203	6	2			
7	**Striker pin assembly—bonnet catch**	**14B2845**	7	1			
8	Spring—striker pin	14B2846	8	1			
9	Screw—striker pin assembly	HZS0405	9	2			
10	Washer—plain—screw	PWZ104	10	2			
11	Washer—spring—screw	LWZ204	11	2			
12	Slider support assembly	ADH456	12	1			
13	Lever	ADA457	13	1			
14	Clevis pin—lever	CLZ0313	14	1			
15	Washer—plain—pin—large	PWZ203	15	1			
16	Washer—plain—pin—small	PWZ103	16	1			
17	Cotter pin	ZPS0204	17	1			
18	Rod—connecting—lever to bonnet catch slider	14B6754	18	1			
19	Washer—plain—rod	PWZ103	19	2			
20	Cotter pin	ZPS0204	20	1			
21	Plate—guide	ADA463	21	1			
22	Tube—distance	ADA464	22	2			
23	Slider—bonnet catch	ADA461	23	1			
24	Screw—plate tube and slider	HZS0407	24	2			
25	Washer—plain—screw	PWZ104	25	2			
26	Washer—spring—screw	LWZ204	26	2			
27	**Spring—tension—bonnet catch**	**ADA466**	27	1			
28	Sleeve—spring (rubber)	ADA467	28	1			
29	**Rod—bonnet lock remote control**	**14B6805**	29	1			
30	Grommet—rod through dash panel	RFN403	30	1			
31	Grommet—rod through support bracket	3F90	31	1			
32	Washer—plain—rod	PWZ103	32	1			
33	Cotter pin	ZPS0204	33	1			
34	**Spring—anti-rattle**	**ADA2450**	34	1			
35	Bracket—anchor	ACA5314	35	1			
36	Clip—retaining—anchor bracket	14G5507		1			
37	Strip—bonnet surround sealing—LH	24B758	36	1	AHB9095	Com. (C) 13751	
38	Plate—pedal accommodation box assembly blanking	4B3223	38	1			
39	Screw fixing plate	PTZ803	39	4			
40	Nut—spring—screw	PFS528	40	4			

Item No.	DESCRIPTION	Commencing (C) 101 Part Number	Illus. No.	Quantity	MODIFICATIONS New Part Number	MODIFICATIONS Change Point	REMARKS
	Body shell—*continued*						
1	Plate—steering column sealing—inner	14B1815	41	1			
2	Plate—steering column sealing—outer	14B7544	42	1			
3	Plate—steering column blanking—inner	14B2512	43	1			
4	Plate—steering column blanking—outer	14B7545	44	1			
5	Felt—sealing and blanking plates	14B2513	45	4			
6	Screw—plate	PTZ603	46	16			Part No. change; was 53K3157
7	Washer—screw—special	AJD7202	47	16			
8	Bracket—steering column	14B2547	48	1			
9	Screw—bracket	HZS0505	49	4			
10	Nut—screw	FNZ105	50	4			
11	Washer—plain—nut	PWZ105	51	6			
12	Washer—spring—nut	LWZ205	52	4			
13	Bracket—steering column steady	14B7458	53	1			
14	Panel—front apron	14B5735	59	1			

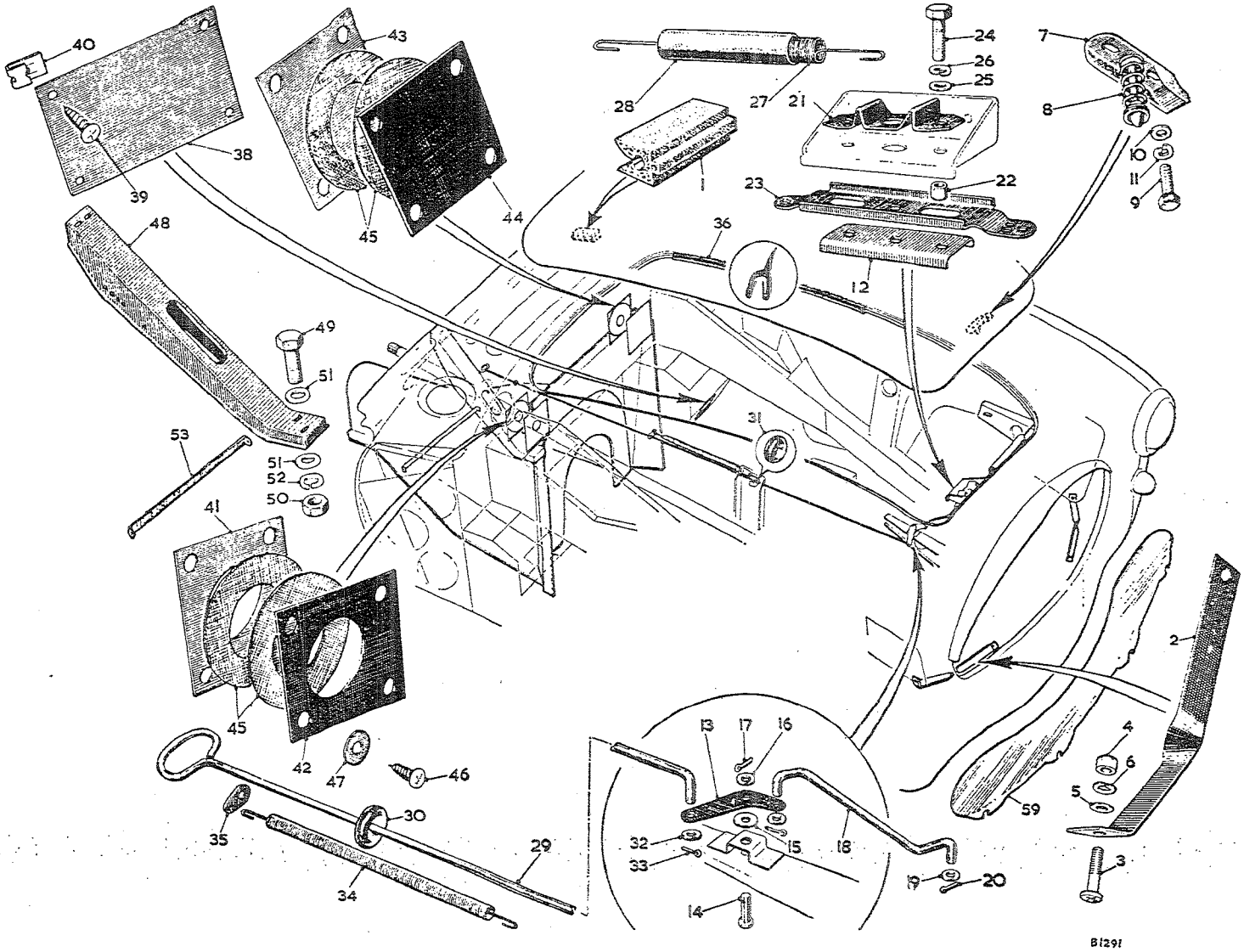

To face page R.12

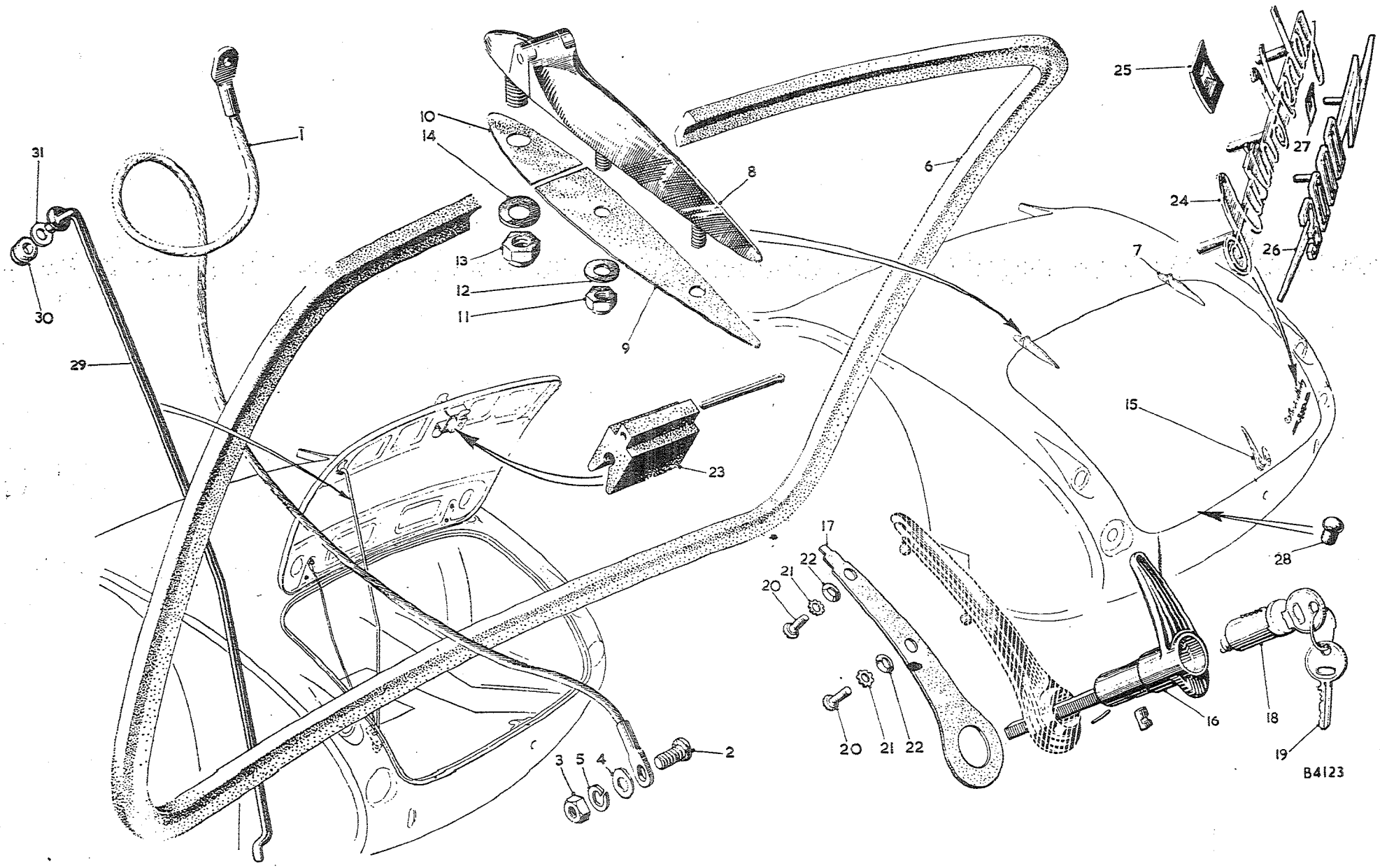

To face page R.13

Item No.	DESCRIPTION	Commencing (C) 101 Part Number	Illus. No.	Quantity	MODIFICATIONS New Part Number	MODIFICATIONS Change Point	REMARKS
	BOOT LID FITTINGS						
1	Cable—boot lid control	14B8692	1	1			
2	Screw fixing cable	PMZ0410	2	1			
3	Nut—screw	FNZ104	3	1			
4	Washer—plain—nut	PWZ104	4	1			
5	Washer—spring—nut	LWZ204	5	1			
6	Rubber—sealing	14B7466	6	1			
7	Rod—boot lid prop	14B6597	29	1			
8	Ferrule—rod (rubber)	2H1046	30	1			
9	Washer—plain—rod	PWZ105	31	1			
10	Hinge—boot lid—RH	14B1725	7	1			
11	Hinge—boot lid—LH	14B1726	8	1			
12	Washer—seating—male	14B3462	9	2			
13	Washer—seating—female	14B3463	10	2			
14	Nut—hinge to outer panel	53K1661	11	4			
15	Washer—plain—nut	PWZ104	12	4			
16	Nut—hinge to top panel	53K1662	13	2			
17	Washer—plain—nut	PWZ105	14	2			
18	**Handle assembly—locking**	**14B1963**	**15**	1			
19	Handle	14B1721	16	1			
20	Escutcheon	14B1722		1			
21	Washer—escutcheon	14B1964	17	1			
22	**Barrel—lock**	**7H9830**	**18**	**1**	**2H4185**		**7H9830 not available; use 2H4185**
23	Key	ANK4646	19	1			
24	Screw fixing handle	PMZ0306	20	2			
25	Washer—shakeproof—screw	LWN403	21	2			Part No. change; was 2K8609 and LWN603
26	Washer—cup—screw	6K9426	22	2			
27	Stop—prop rod (rubber)	2H9215	23	1			
28	Badge—'Austin-Healey'	8G705	24	1			
29	Push-on—fix	PFS106	25	3			Part No. change; was 14B3823
30	Motif—'3000'	AHB8861	26	1			
31	Push-on—fix	BHA4082	27	2			
32	Badge—rally commemoration 'Liege Rome Liege'	AHB8991		1		] Fin. (C) 13750	
33	Push-on—fix	BHA4082		2			
34	Buffer—boot lid (rubber)	4G8595	28	3			

Item No.	DESCRIPTION	Commencing (C) 101 Part Number	Illus. No.	Quantity	MODIFICATIONS New Part Number	MODIFICATIONS Change Point	REMARKS
	WINDSCREEN						
1	**Windscreen assembly**	**24B624**	1	1			
2	Frame—windscreen	24B625	2	1			
3	Pillar—RH	14B5889	3	1			
4	Pillar—LH	14B5890	4	1			
5	Glass	14B5891	5	1			
6	Rubber—glazing—side and bottom rail	AHB5833	6	1			
7	Rubber—glazing—top rail	AHB8382	7	1			
8	Strip—glass (rubber)	24B503	8	1			
9	Weatherseal—bottom	14B5892	9	1			
10	Screw—frame to pillar	54K195	10	8			
11	Pad—pillar foot (rubber)	14B6743	11	2			
12	Stud—toggle clamp retaining	14B7660	12	2			
13	Plate—pillar packing	14B2630		2			
14	Screw—pillar to scuttle top panel	RMP0416	13	2			
15	Nut—screw	FNZ104	14	2			
16	Washer—plain—nut	PWZ204	15	2			
17	Washer—spring—nut	LWZ204	16	2			
18	Screw—windscreen to scuttle side panel—1″ (25·4 mm.)	HZS0408	17	3			
19	Screw—windscreen to scuttle side panel—1½″ (31·75 mm.)	HZS0410	18	1			
20	Nut—screw	FNZ104	19	4			
21	Washer—plain—nut	PWZ104	20	4			
22	Washer—spring—nut	LWZ204	21	4			
23	Screw—1¼″ × $\frac{5}{16}$″ (31·75 × 7·93 mm.)	HZS0510	22	2			
24	Washer—plain—screw	PWZ106	23	2			
25	Washer—spring—screw	LWZ205	24	2			

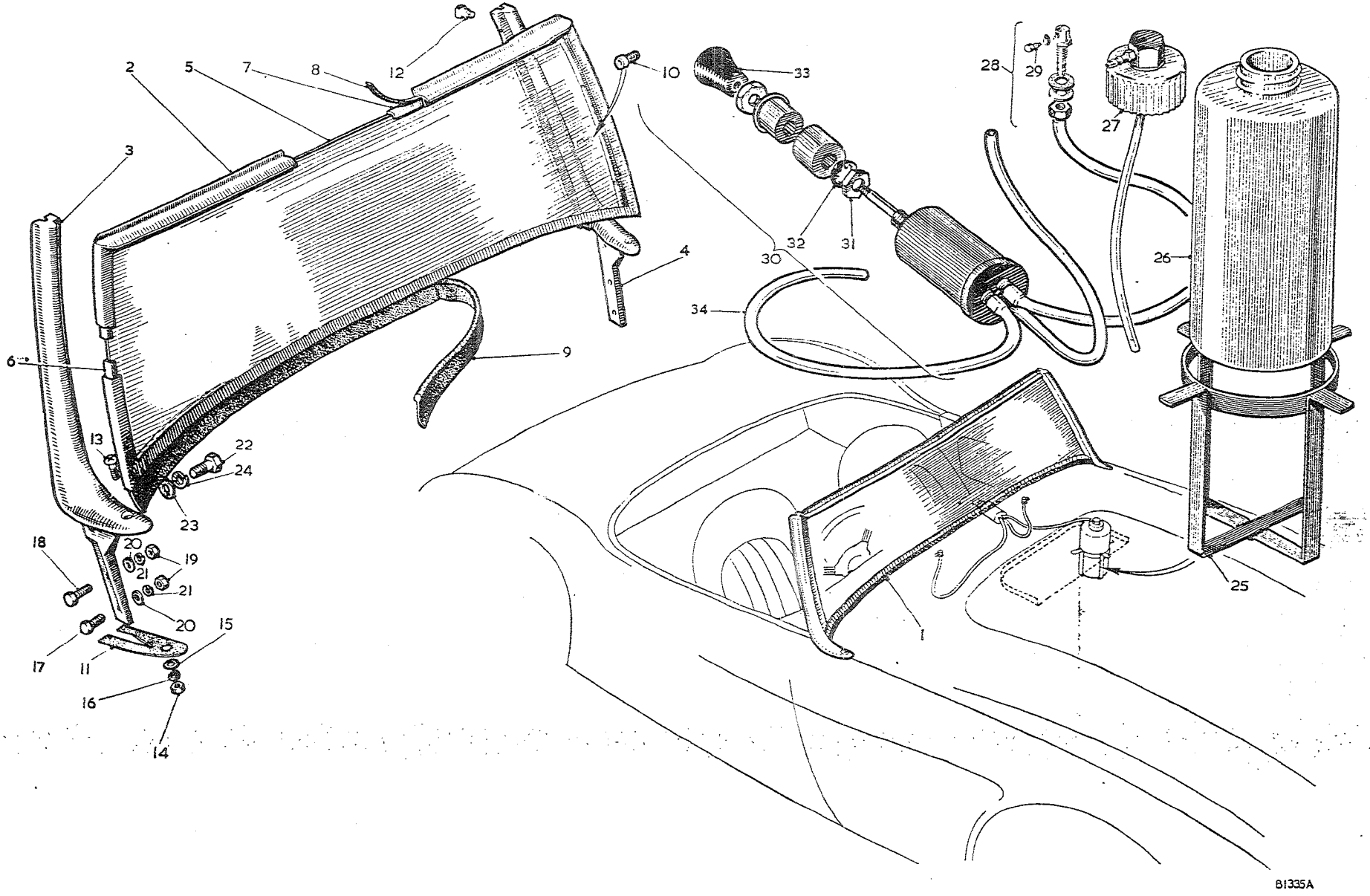

To face page R.14

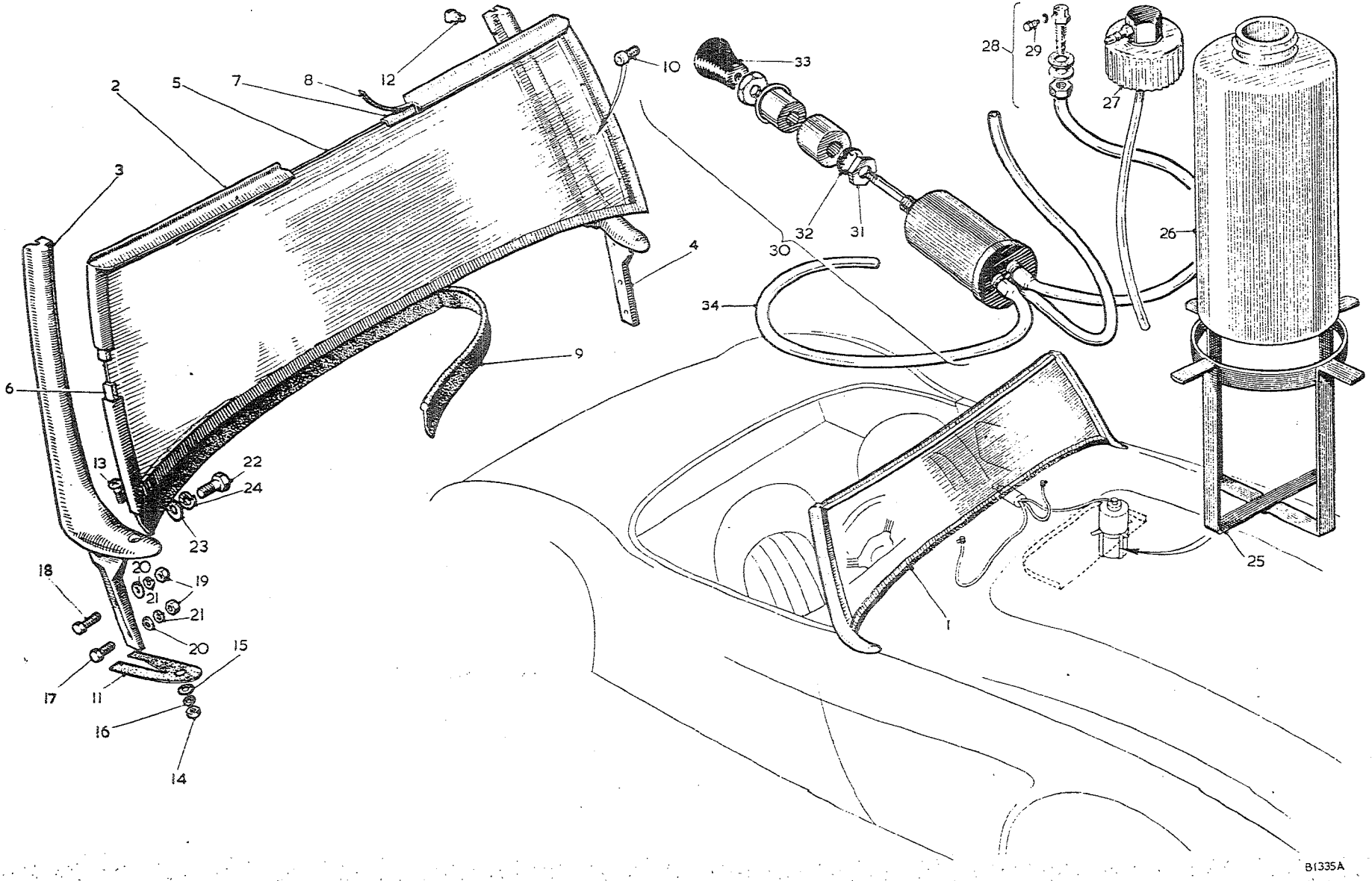

To face page R.15

Item No.	DESCRIPTION	Commencing (C) 101 Part Number	Illus. No.	Quantity	MODIFICATIONS New Part Number	MODIFICATIONS Change Point	REMARKS
	WINDSCREEN WASHER						
1	**Washer—windscreen**	**AHB5945**		1	**AHB3940**	**Com. (C) 6487 BN7, 6345 BT7**	
2	Bracket	27H9671	25	1			
3	Container—small neck	37H9763		1		Fin. (C) 6486 BN7, 6344 BT7	Not available; use 37H9729 with 37H9715
4	Cap assembly—small	7H9785		1			Not available; use 37H9729 with 37H9715
5	Container—large neck	37H9729	26	1			
6	Cap assembly—large	37H9715	27	1			
7	**Mounting assembly—jet**	**13H231**	28	2			**Part No. change; was 27H9622**
8	Jet	27H9623	29	2			
9	**Control assembly**	**27H9654**	30	1	**37H9730**	**Com. (C) 6487 BN7, 6345 BT7**	**27H9654 not available; use 37H9730**
10	Nut—back	27H9655	31	1			
11	Washer—shakeproof	LWN406	32	1			Part No. change; was 7H9782
12	Bulb (rubber)	27H9626		1	27H9824	Com. (C) 6487 BN7, 6345 BT7	
13	Knob	27H9625	33	1			
14	Tubing—$\frac{3}{16}$" (4·76 mm.) dia.	37H9708	34	A/R			**Only available in multiples of feet**

Item No.	DESCRIPTION	Commencing (C) 101 Part Number	Illus. No.	Quantity	MODIFICATIONS New Part Number	MODIFICATIONS Change Point	REMARKS
	DOOR FITTINGS						
1	**Check assembly—RH**	**14B7554**	1	1			
2	**Check assembly—LH**	**14B7555**		1			
3	Bracket and stud assembly—RH	14B7556	2	1			
4	Nut—stud—LHT	53K1191	3	1			
5	Bracket and stud assembly—LH	14B7557		1			
6	Nut—stud—RHT	53K1712		1			
7	Spanner—friction	14B7562	4	2			
8	Washer—spring	14B7563	5	2			
9	Link—connection	14B7564	6	2			
10	Disc—friction	14B7565	7	2			
11	Arm	14B7566	8	2			
12	Bracket—check strap	14B4466	9	2			
13	Washer—shakeproof	LWN403	10	2			Part No. change; was 2K8609 and LWN603
14	Screw	53K122	11	2			
15	Screw—shouldered	54K3495	12	2			
16	Screw—check assembly to hinge pillar	HZS0406	13	4			
17	Washer—plain—screw	PWZ104	14	4			
18	Washer—spring—screw	LWZ304	15	4			
19	Screw—check assembly to door	RMP0310	16	4			
20	Nut—screw	FNZ103	17	4			
21	Washer—plain—screw	PWZ103	18	4			
22	Washer—spring—screw	LWZ203	19	4			
23	**Handle—door—RH**	**24B612**	**20**	**1**			
24	**Handle—door—LH**	**24B613**		**1**			
25	Washer—seating	14B9476	21	2			
26	Screw—door handle to door panel	RMP0308	22	2			
27	Nut—screw	FNZ103	23	2			
28	Washer—spring—nut	LWZ203	24	2			
29	**Handle—remote control**	**ADG1673**	**25**	**2**			Part No. change; was ADG1811
30	Pin—handle securing	ALH1527	26	2			
31	**Escutcheon assembly**	**ADB709**	**27**	**2**			Not available; use ADB709
32	Shell—front	ADB3657	28	2			Not available; use ADB709
33	Shell—back	ADB554	29	2			
34	Spring	ADB557	30	2			
35	Striker—door lock	14B2841	31	2			
36	Plate—packing	14B2842	32	2			
37	Plate—tapped	14B2843	33	2			
38	Screw—striker	RMP0312	34	8			

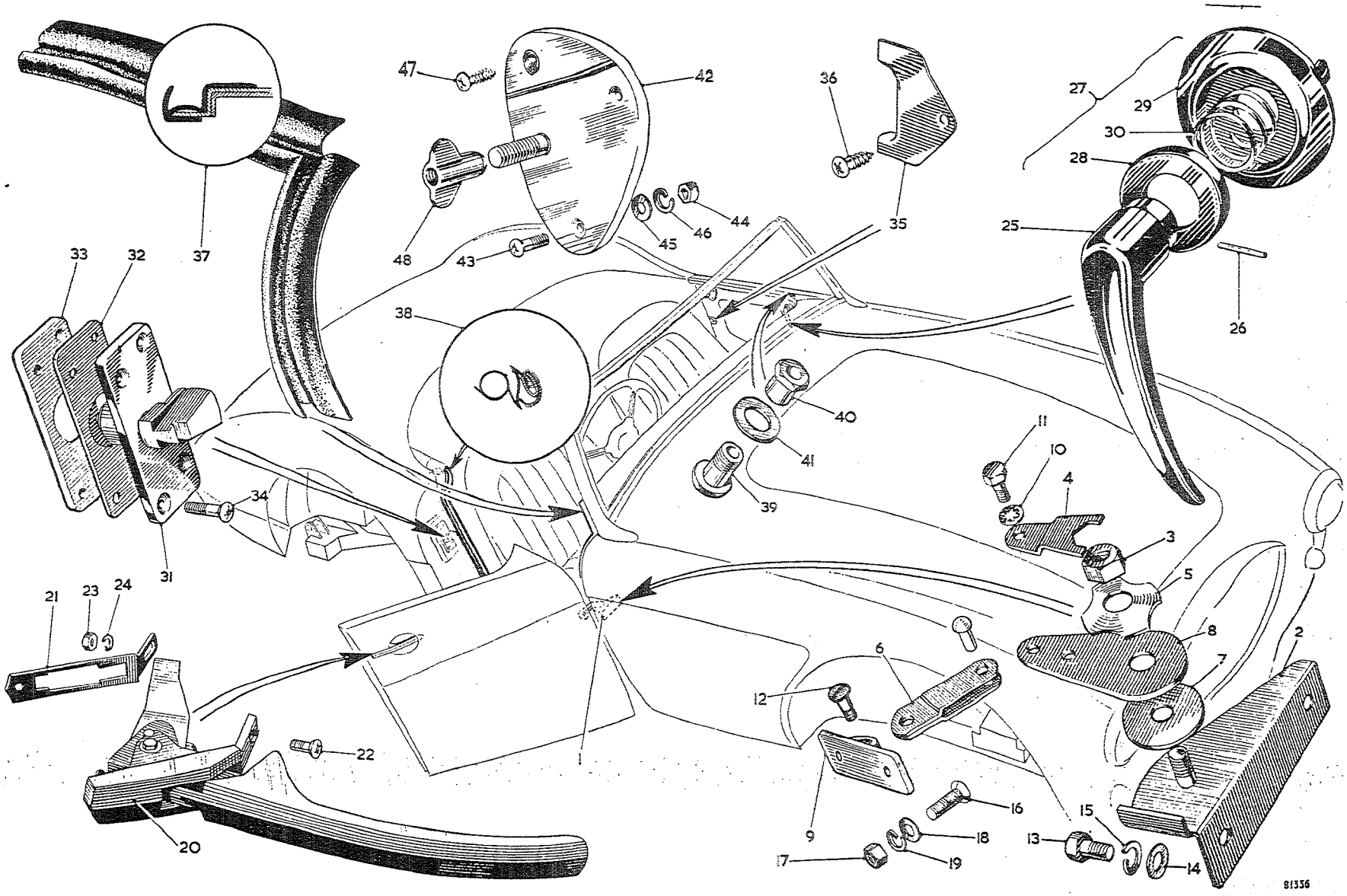

To face page R.16

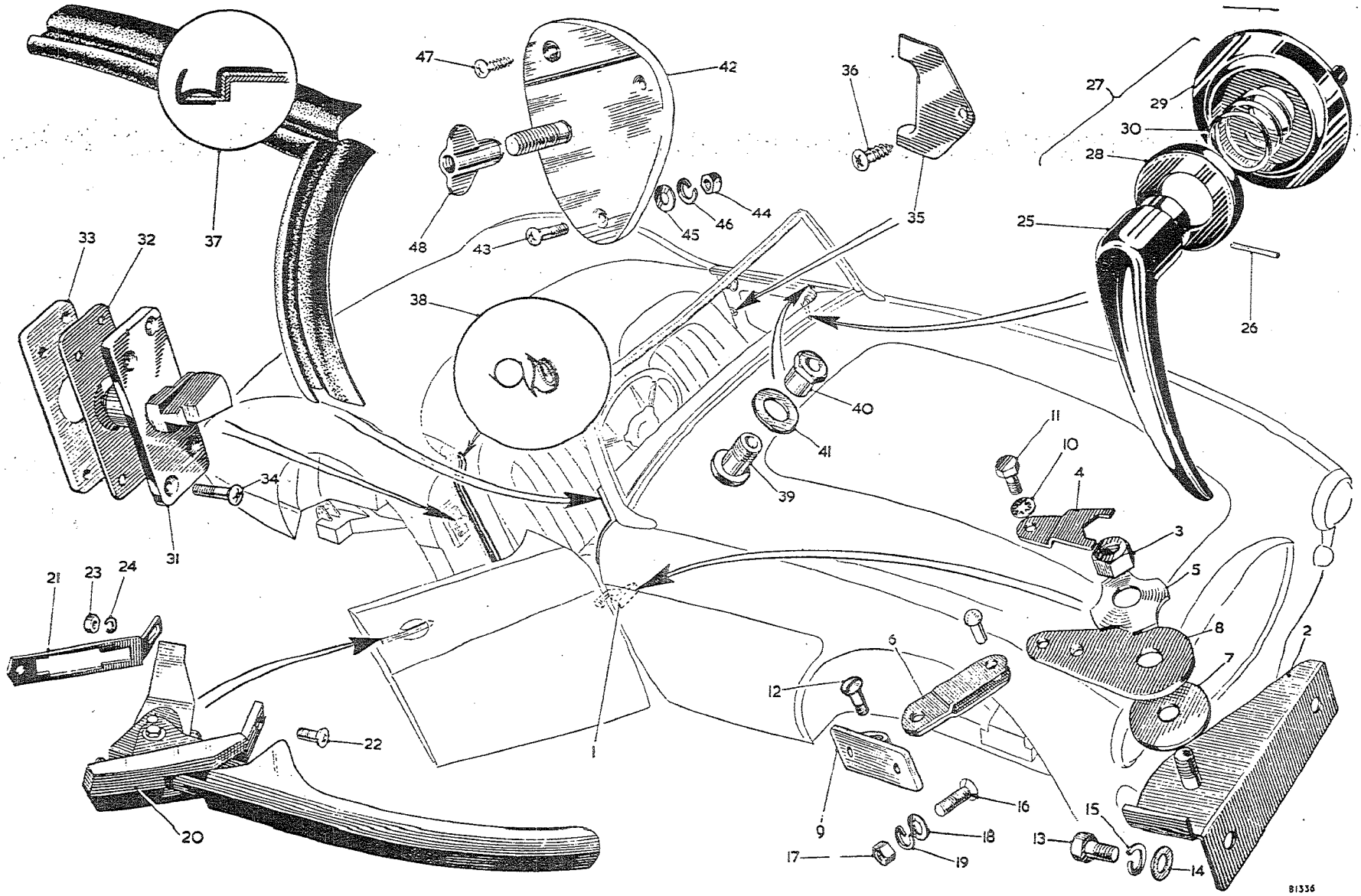

To face page R.17

Item No.	DESCRIPTION	Commencing (C) 101 Part Number	Illus. No.	Quantity	MODIFICATIONS New Part Number	MODIFICATIONS Change Point	REMARKS
	Door Fittings—*continued*						
1	Plate—lock catch	14B2544	35	2			
2	Screw—plate	RJP604	36	2			
3	Sealing rubber—door to scuttle—RH	24B690	37	1			
4	Sealing rubber—door to scuttle—LH	24B691		1			
5	Sealing rubber—door aperture surround—red	AHB5398	38	2			AHB5398 not available; use 37H9956
6	Sealing rubber—door aperture surround—blue	AHB8307	38	2			AHB8307 not available; use 37H9957
7	Sealing rubber—door aperture surround—black	AHB8308	38	2			AHB8308 not available; use 37H9955
8	Sealing rubber—door aperture surround—grey	AHB8309	38	2			AHB8309 not available; use 37H9950
9	Sealing rubber—door aperture surround—red—69″ (176 cm.)		38	A/R	37H9956		Only available in multiples of yards
10	Sealing rubber—door aperture surround—blue—69″ (176 cm.)		38	A/R	37H9957		
11	Sealing rubber—door aperture surround—black—69″ (176 cm.)		38	A/R	37H9955		
12	Sealing rubber—door aperture surround—grey—69″ (176 cm.)		38	A/R	37H9950		
13	Socket—side window	14B7648	39	2			
14	Nut—socket	14B7649	40	2			
15	Washer—nut	14B7651	41	2			
16	Plate assembly—side window securing	24B1656	42	2			
17	Screw—plate	RPP0310	43	4	RMP0310		RPP0310 not available; use RMP0310
18	Nut—screw	FNZ103	44	4			
19	Washer—plain—nut	PWZ103	45	4			
20	Washer—spring—nut	LWZ203	46	4			
21	Screw—plate	54K3413	47	2			
22	Nut—wing—side window	24B540	48	4			

	Commencing (C) 101		Quantity	MODIFICATIONS		REMARKS
	Part Number	Illus. No.		New Part Number	Change Point	
	24B635		1			
	24B636		1			
	24B637	1	1			
	24B638		1			
	14B8840		2			
	14B8712	2	1			
	14B8713		1			
	14B7744	3	2			
	14B7743		2			
	14B7755	4	1			
	14B7756		1			
	4G8595	5	2			
	24B553	6	1			
	24B554		1			
	14B7764	7	4			
	14B7762	8	4			
	LWN403	9	4			Part No. change; was 2K8609 and LWN603
	24B617	10	1			
	24B618		1			
	14B7764	11	4			
	14B7762	12	4			
	PWZ103	13	4			
	LWN403	14	4			Part No. change; was 2K8609 and LWN603

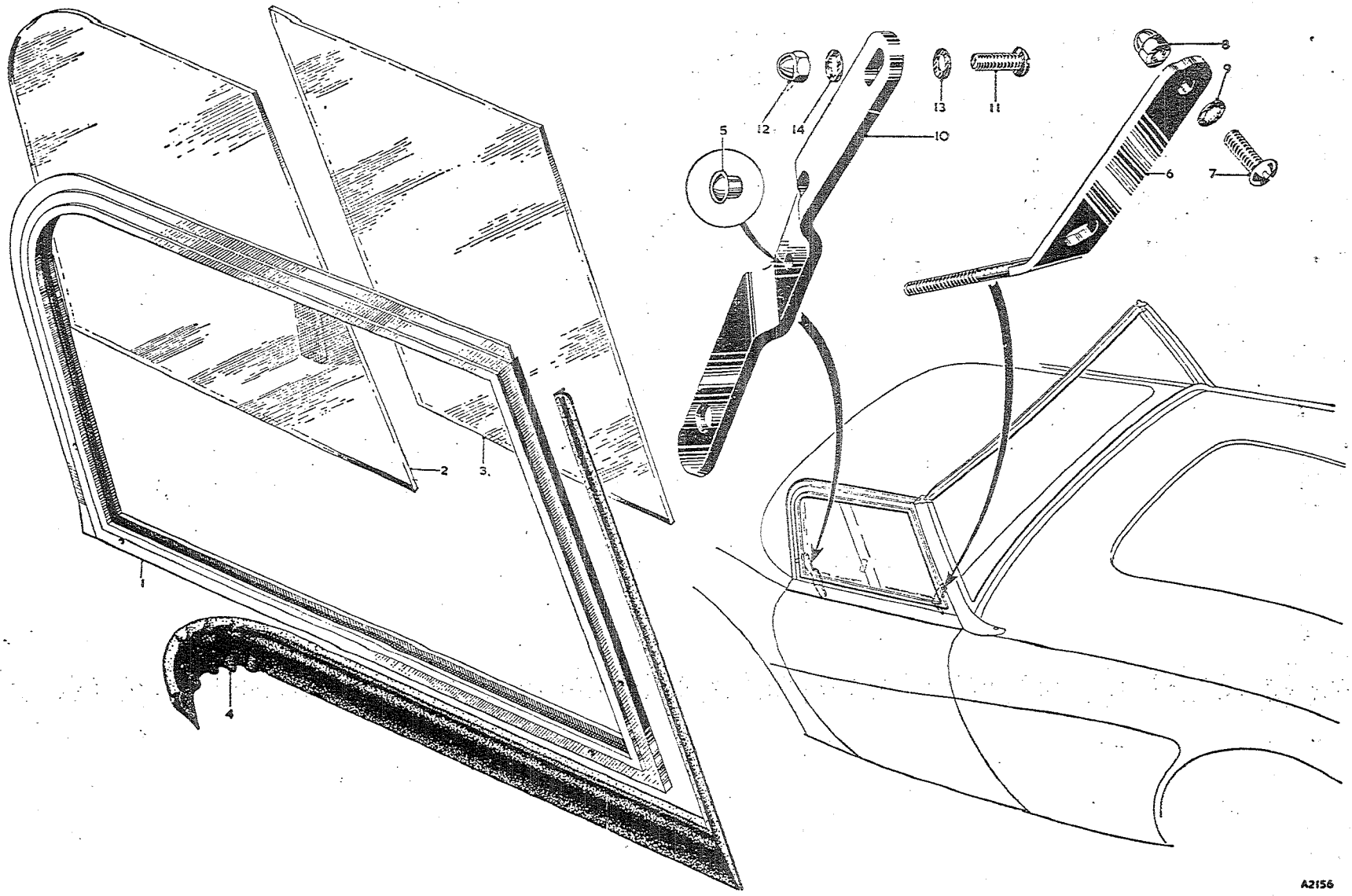

To face page R.18

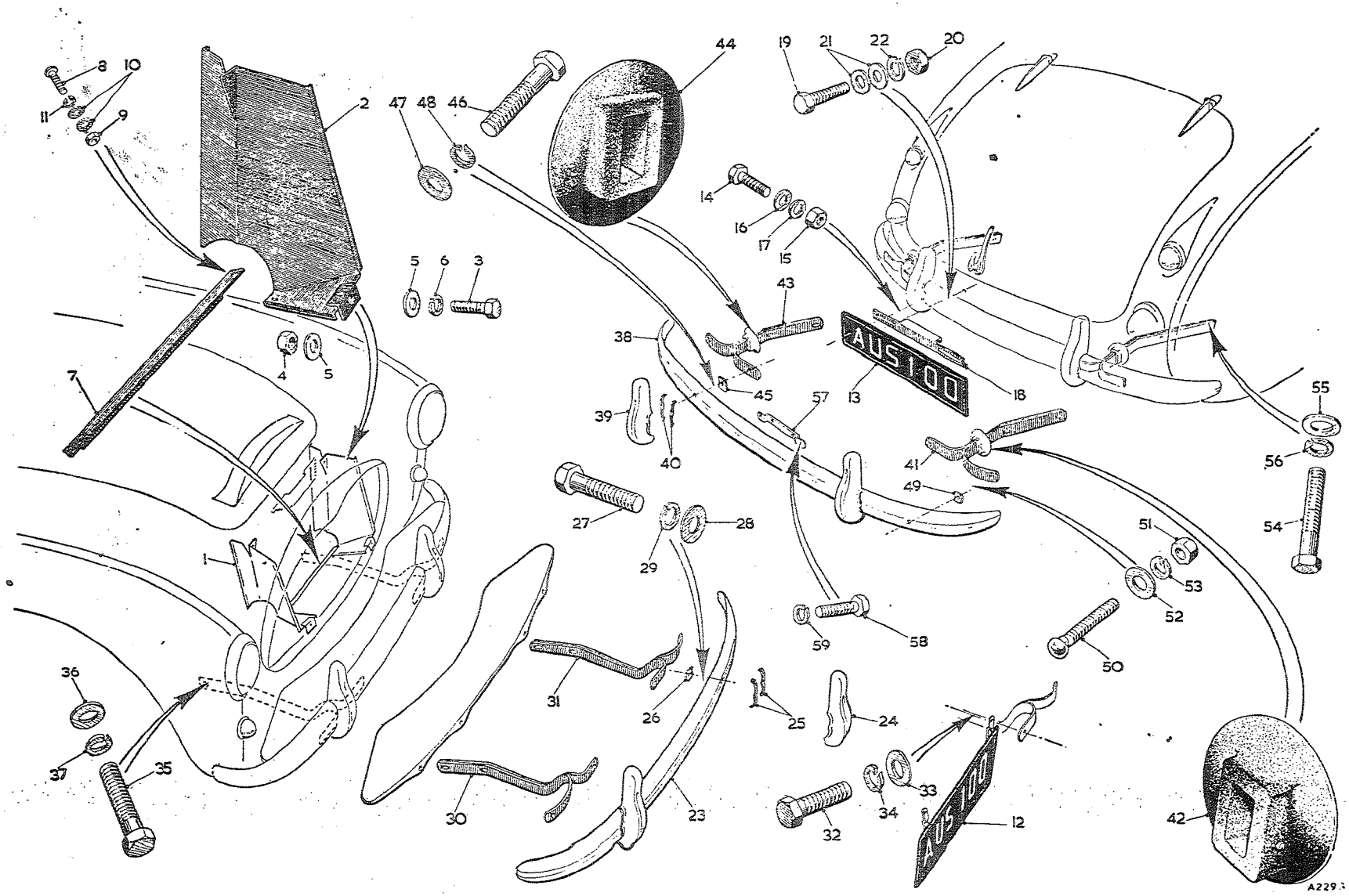

To face page R.19

Item No.	DESCRIPTION	Commencing (C) 101 Part Number	Illus. No.	Quantity	MODIFICATIONS New Part Number	MODIFICATIONS Change Point	REMARKS
	BONNET FITTINGS						
1	**Deflector assembly—air intake—RH**	4B4204	1	1	AHB9092	Com. (C) 13751	
2	**Deflector assembly—air intake—LH**	4B4205	2	1	AHB9093		
3	Screw—deflector assembly	HZS0406	3	2			
4	Nut—screw	FNZ104	4	2			
5	Washer—plain—nut	AJD7282	5	4			Part No. change; was 6K9823
6	Washer—spring—nut	LWZ204	6	2			
7	Tie-bar—deflector	24B601	7	1			
8	Screw—tie-bar	PMZ0308	8	2			
9	Nut—screw	FNZ103	9	2			
10	Washer—plain—nut	PWZ103	10	4			
11	Washer—spring—nut	LWZ203	11	2			
	NUMBER PLATES AND FITTINGS						
12	**Plate—front number** (UK only)	1B8937	12	1			
13	**Plate—rear number** (UK only)	1B8940	13	1			
14	Bolt—rear number plate to bracket (UK only)	HZS0404	14	2			
15	Nut—bolt (UK only)	FNZ104	15	2			
16	Washer—plain—nut (UK only)	PWZ204	16	2			
17	Washer—spring—nut (UK only)	LWZ204	17	2			
18	**Bracket—rear number plate** (UK only)	14B2742	18	1			
19	**Bracket assembly—rear number plate and lamp** Not UK			1	AHB8978	Com. (C) 13488	
20	Screw—bracket to body	HZS0405	19	2			
21	Nut—screw	FNZ104	20	2			
22	Washer—plain—nut	PWZ104	21	4			
23	Washer—spring—nut	LWZ204	22	2			

Item No.	DESCRIPTION	Commencing (C) 101 Part Number	Illus. No.	Quantity	MODIFICATIONS New Part Number	MODIFICATIONS Change Point	REMARKS
	BUMPERS AND FITTINGS						
1	**Bar—front bumper**	**11B5303**	23	1			
2	**Over-rider assembly**	**11B5309**	24	2			
3	Seating—over-rider	11B5309	25	4			
4	Packing piece—over-rider to bumper bar	1G9799	26	2			
5	Screw—over-rider to bumper bar	HZS0610	27	2			
6	Washer—plain—screw	PWZ106	28	2			
7	Washer—spring—screw	LWZ306	29	2			
8	**Spring bar assembly—front—RH**	**17H9701**	30	1			
9	**Spring bar assembly—front—LH**	**17H9702**	31	1			
10	Screw—spring bar and number plate bracket to bumper bar	HZS0608	32	4			
11	Washer—plain—screw	PWZ106	33	4			
12	Washer—spring—screw	LWZ306	34	4			
13	Bolt—front bumper bar to frame	HBZ0611	35	4			
14	Washer—plain—bolt	PWZ106	36	4			
15	Washer—spring—bolt	LWZ306	37	4			
16	**Bar—rear bumper**	**11B5312**	38	1			
17	**Over-rider assembly**	**11B5308**	39	2			
18	Seating—over-rider	11B5309	40	4			
19	**Spring bar assembly—rear—RH**	**17H9699**	41	1			
20	Grommet—spring bar—RH	1A9307	42	1			
21	**Spring bar assembly—rear—LH**	**17H9700**	43	1			
22	Grommet—spring bar—LH	1A9308	44	1			
23	Packing piece—inner spring bar to bumper bar	1G9799	45	2			
24	Bolt—inner spring bar to bumper bar and over-rider	HBZ0612	46	2			
25	Washer—plain—bolt	PWZ106	47	2			
26	Washer—spring—bolt	LWZ306	48	2			
27	Packing piece—outer spring bar to bumper bar	1G9799	49	2			
28	Beetle bolt—outer spring bar to bumper bar	1G9707	50	2	37H9659		1G9707 not available; use 37H9659
29	Nut—bolt	FNZ106	51	2			
30	Washer—plain—nut	PWZ106	52	2			
31	Washer—spring—nut	LWZ306	53	2			
32	Setscrew—rear bumper bar to frame	HBZ0611	54	4			
33	Washer—plain—set screw	PWZ106	55	4			
34	Washer—spring—set screw	LWZ306	56	4			
35	**Bracket—rear number plate illumination lamp**	**14B1941**	57	1			
36	Setscrew—bracket to bumper bar	HZS0405	58	2			
37	Washer—spring—set screw	LWZ304	59	2			

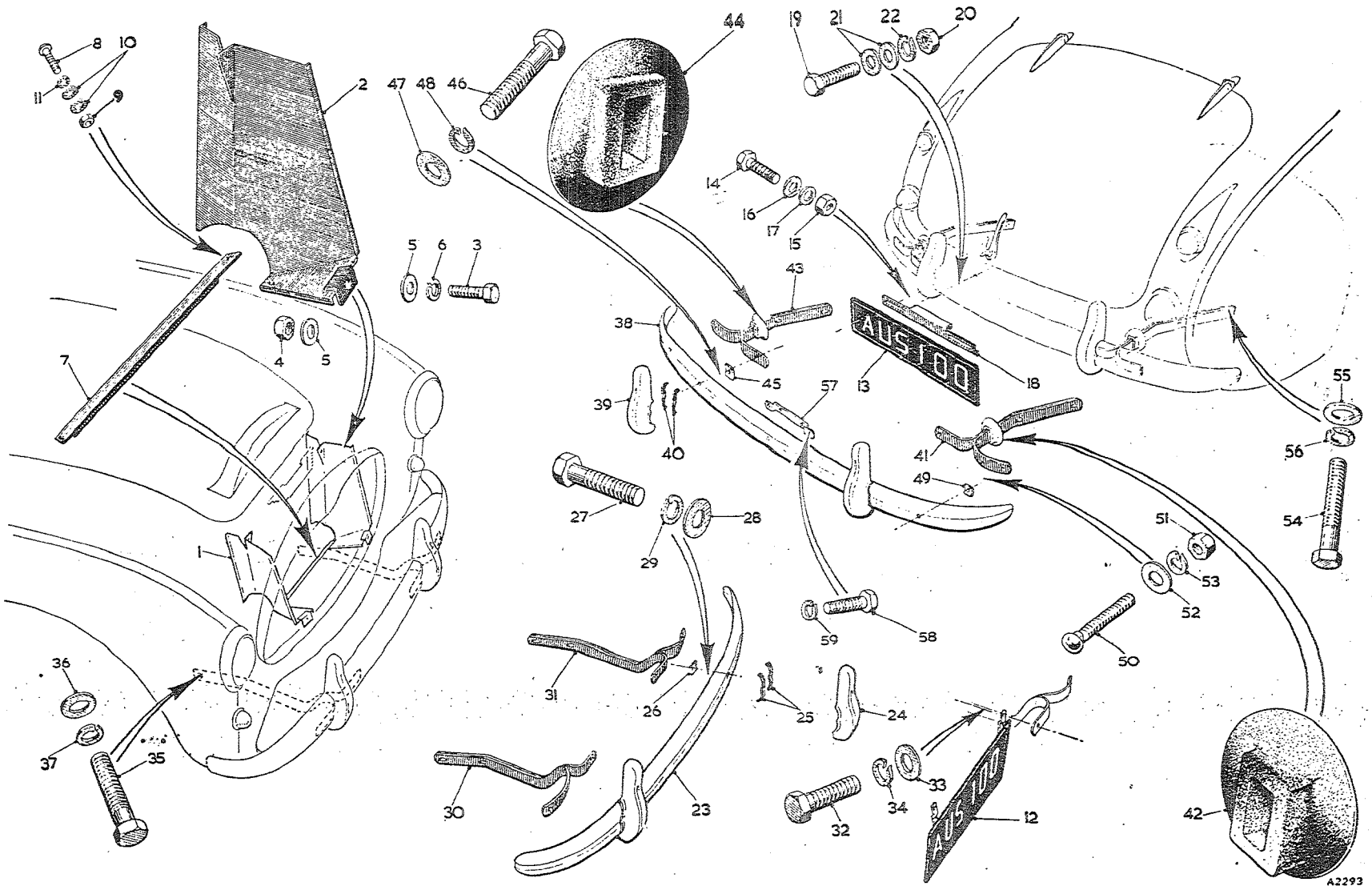

To face page R.20

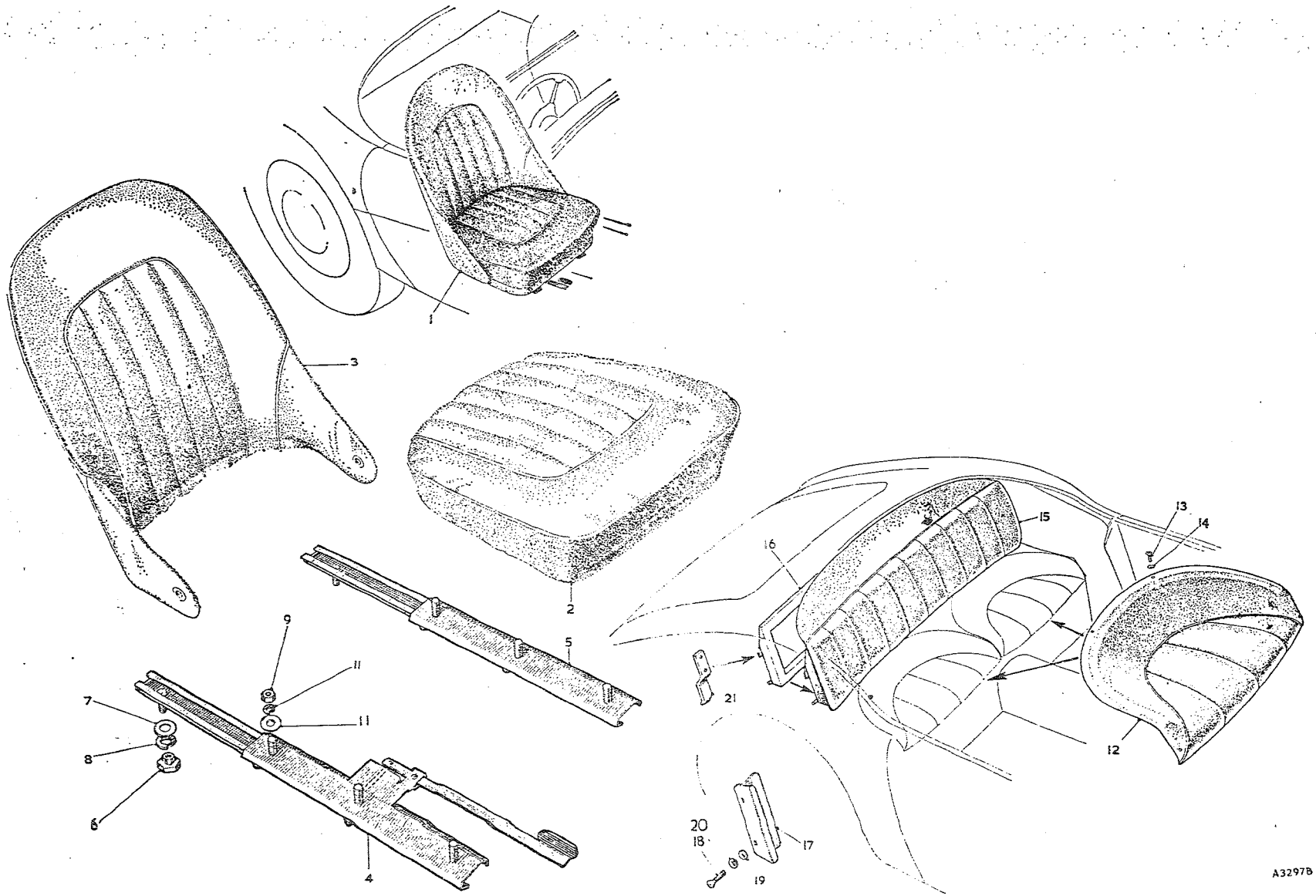

To face page R.21

Item No.	DESCRIPTION	Commencing (C) 101 Part Number	Commencing (C) 101 Illus. No.	Quantity	MODIFICATIONS New Part Number	MODIFICATIONS Change Point	REMARKS
	SEATS AND SEAT FITTINGS						
1	**Seat assembly—bucket—RH—red with ivory white piping**	**4B4206**	1	1			
2	Seat assembly—bucket—RH—red with black piping	AHB5538		1			
3	Seat assembly—bucket—RH—blue with ivory white piping	AHB5539		1			
4	Seat assembly—bucket—RH—black with ivory white piping	AHB5540		1			
5	Seat assembly—bucket—RH—black with yellow piping	AHB5541		1			
6	Seat assembly—bucket—RH—grey with green piping	AHB5542		1			
7	Seat assembly—bucket—RH—grey with red piping	AHB5543		1			
8	Seat assembly—bucket—RH—yellow with black piping	AHB5544		1			
9	Seat assembly—bucket—LH—red with ivory white piping	4B4207		1			
10	Seat assembly—bucket—LH—red with black piping	AHB5559		1			
11	Seat assembly—bucket—LH—blue with ivory white piping	AHB5560		1			
12	Seat assembly—bucket—LH—black with ivory white piping	AHB5561		1			
13	Seat assembly—bucket—LH—black with yellow piping	AHB5562		1			
14	Seat assembly—bucket—LH—grey with green piping	AHB5563		1			
15	Seat assembly—bucket—LH—grey with red piping	AHB5564		1			
16	Seat assembly—bucket—LH—yellow with black piping	AHB5565		1			
17	**Cushion assembly—bucket seat—RH—red with ivory white piping**	**14B1382**	2	1			
18	Cushion assembly—bucket seat—RH—red with black piping	AHB5545		1			
19	Cushion assembly—bucket seat—RH—blue with ivory white piping	AHB5546		1			
20	Cushion assembly—bucket seat—RH—black with ivory white piping	AHB5547		1			
21	Cushion assembly—bucket seat—RH—black with yellow piping	AHB5548		1			
22	Cushion assembly—bucket seat—RH—grey with green piping	AHB5549		1			
23	Cushion assembly—bucket seat—RH—grey with red piping	AHB5550		1			
24	Cushion assembly—bucket seat—RH—yellow with black piping	AHB5551		1			
25	Cushion assembly—bucket seat—LH—red with ivory white piping	14B1383		1			
26	Cushion assembly—bucket seat—LH—red with black piping	AHB5566		1			
27	Cushion assembly—bucket seat—LH—blue with ivory white piping	AHB5567		1			
28	Cushion assembly—bucket seat—LH—black with ivory white piping	AHB5568		1			
29	Cushion assembly—bucket seat—LH—black with yellow piping	AHB5569		1			
30	Cushion assembly—bucket seat—LH—grey with green piping	AHB5570		1			
31	Cushion assembly—bucket seat—LH—grey with red piping	AHB5571		1			
32	Cushion assembly—bucket seat—LH—yellow with black piping	AHB5572		1			
33	Cover assembly—cushion—RH—red with ivory white piping	14B1387		1			
34	Cover assembly—cushion—RH—red with black piping	AHB5552		1			
35	Cover assembly—cushion—RH—blue with ivory white piping	AHB5553		1			
36	Cover assembly—cushion—RH—black with ivory white piping	AHB5554		1			
37	Cover assembly—cushion—RH—black with yellow piping	AHB5555		1			
38	Cover assembly—cushion—RH—grey with green piping	AHB5556		1			
39	Cover assembly—cushion—RH—grey with red piping	AHB5557		1			
40	Cover assembly—cushion—RH—yellow with black piping	AHB5558		1			

Item No.	DESCRIPTION	Commencing (C) 101 Part Number	Illus. No.	Quantity	MODIFICATIONS New Part Number	MODIFICATIONS Change Point	REMARKS
	Seats and Seat Fittings—*continued*						
1	Cover assembly—cushion—LH—red with ivory white piping	14B1388		1			
2	Cover assembly—cushion—LH—red with black piping	AHB5573		1			
3	Cover assembly—cushion—LH—blue with ivory white piping	AHB5574		1			
4	Cover assembly—cushion—LH—black with ivory white piping	AHB5575		1			
5	Cover assembly—cushion—LH—black with yellow piping	AHB5576		1			
6	Cover assembly—cushion—LH—grey with green piping	AHB5577		1			
7	Cover assembly—cushion—LH—grey with red piping	AHB5578		1			
8	Cover assembly—cushion—LH—yellow with black piping	AHB5579		1			
9	Cover assembly—squab—red with ivory white piping	14B1386	3	2			
10	Cover assembly—squab—red with black piping	AHB5580	3	2			
11	Cover assembly—squab—blue with ivory white piping	AHB5581	3	2			
12	Cover assembly—squab—black with ivory white piping	AHB5582	3	2			
13	Cover assembly—squab—black with yellow piping	AHB5583	3	2			
14	Cover assembly—squab—grey with green piping	AHB5584	3	2			
15	Cover assembly—squab—grey with red piping	AHB5585	3	2			
16	Cover assembly—squab—yellow with black piping	AHB5586	3	2			
17	Slide assembly with lever—RH	14B2774	4	1			
18	Slide assembly with lever—LH	14B2767		1			
19	Slide assembly—plain	14B2768	5	2			
20	'T' nut—slide to floor	14B2877	6	12			
21	Washer—plain—nut	PWZ106	7	12			
22	Washer—spring—nut	LWZ206	8	12			
23	Nut—slide to seat	FNZ104	9	12			
24	Washer—plain—nut	PWZ204	10	12			
25	Washer—spring—nut	LWZ204	11	12			
26	Seat pan assembly—rear—red with ivory white piping	4B3200	12	2			
27	Seat pan assembly—rear—red with black piping	AHB8862	12	2			
28	Seat pan assembly—rear—blue with ivory white piping	AHB8548	12	2			
29	Seat pan assembly—rear—black with ivory white piping	AHB8549	12	2			
30	Seat pan assembly—rear—black with yellow piping **BT7**	AHB8863	12	2			
31	Seat pan assembly—rear—grey with green piping	AHB8550	12	2			
32	Seat pan assembly—rear—grey with red piping	AHB8864	12	2			
33	Seat pan assembly—rear—yellow with black piping	AHB8551	12	2			
34	Screw fixing seat pan to rear bulkhead	RJP606	13	8			
35	Washer—cup—screw	FWP406	14	8			

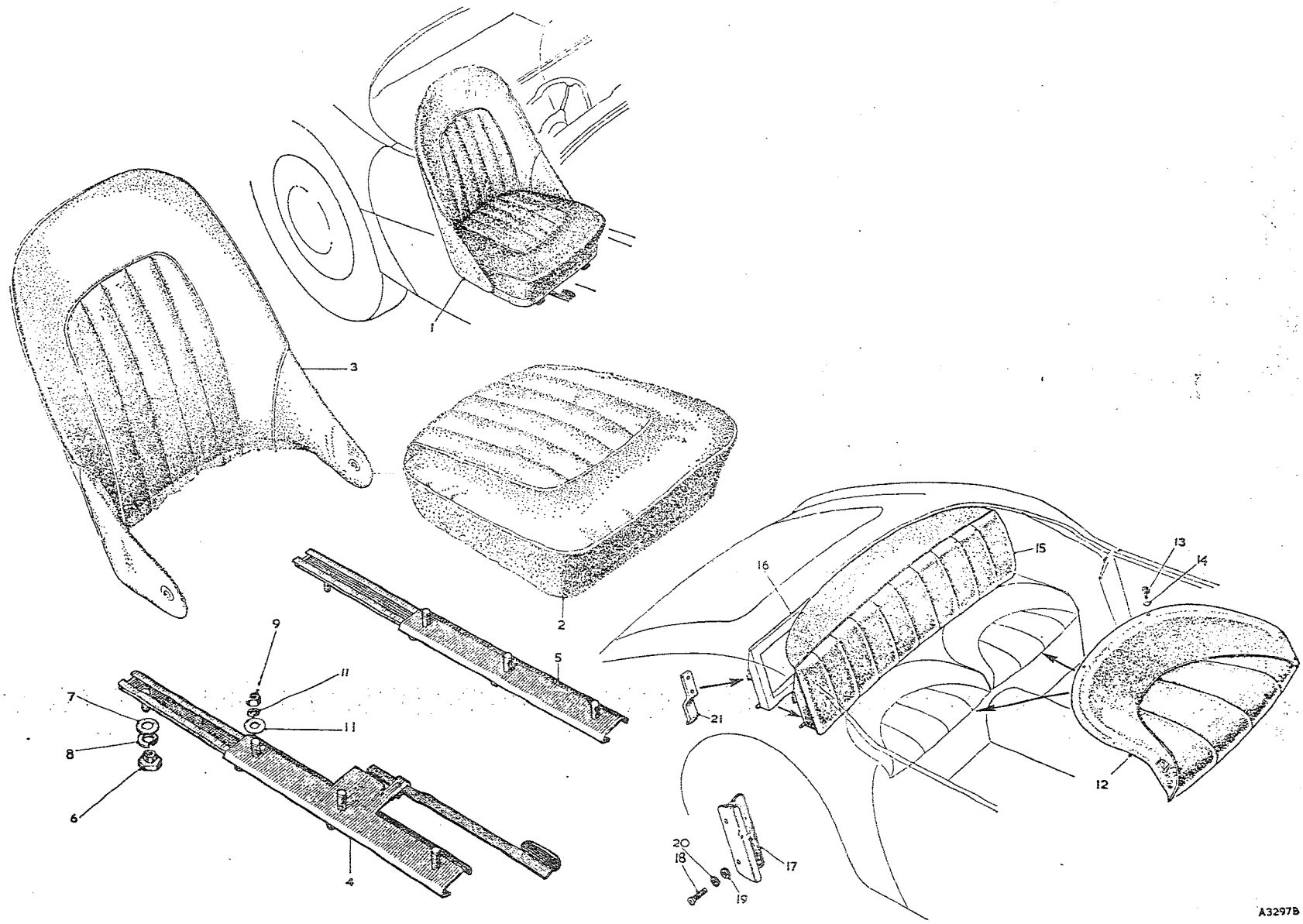

To face page R.22

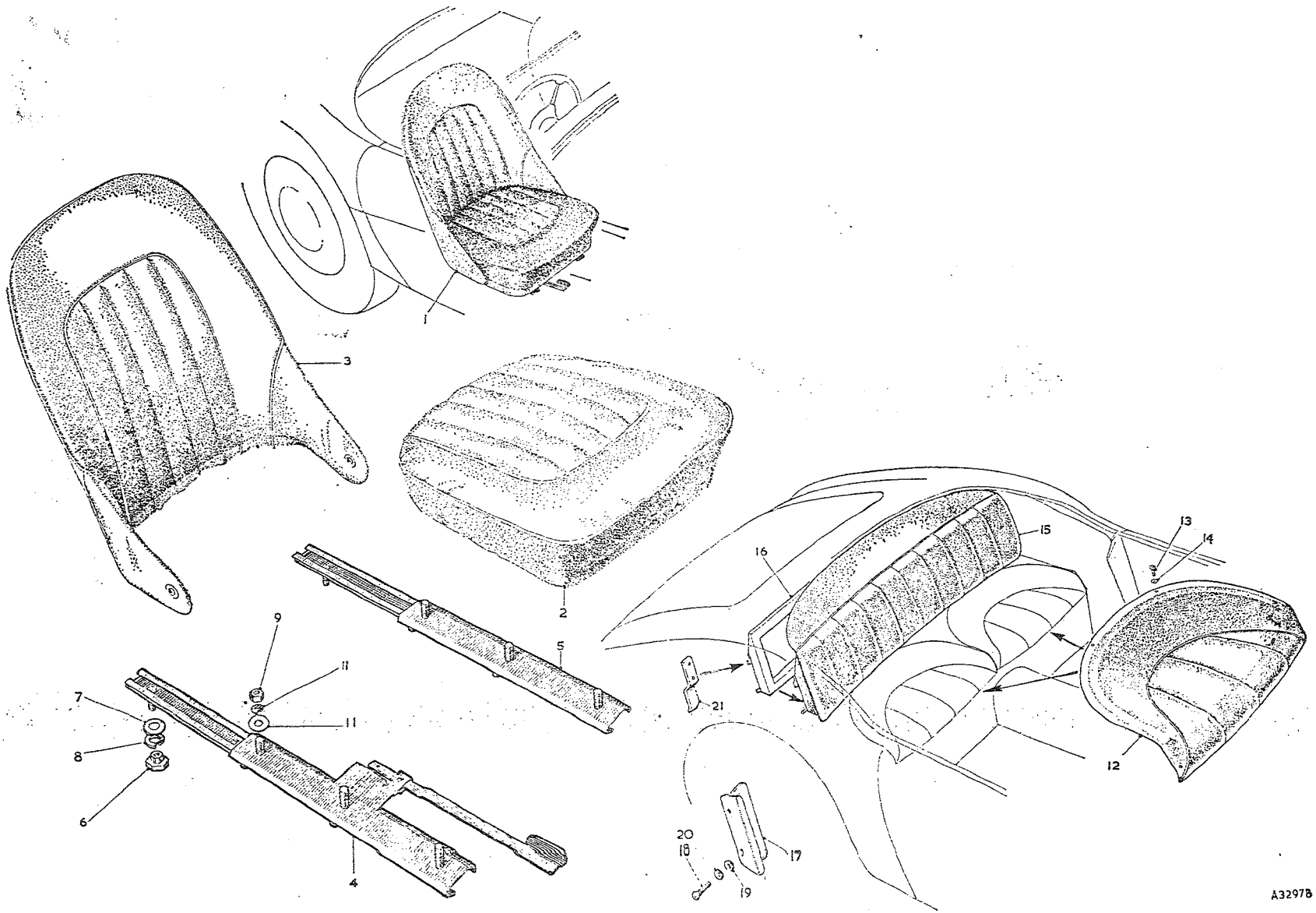

To face page R.23

Item No.	DESCRIPTION		Commencing (C) 101 Part Number	Illus. No.	Quantity	MODIFICATIONS New Part Number	MODIFICATIONS Change Point	REMARKS
	Seat and Seat Fittings—*continued*							
1	Squab assembly—rear—red with ivory white piping		AHB8347	15	1			
2	Squab assembly—rear—red with black piping		AHB8874	15	1			
3	Squab assembly—rear—blue with ivory white piping		AHB8397	15	1			
4	Squab assembly—rear—black with ivory white piping		AHB8398	15	1			
5	Squab assembly—rear—black with yellow piping		AHB8875	15	1			
6	Squab assembly—rear—grey with green piping		AHB8399	15	1			
7	Squab assembly—rear—grey with red piping	BT7	AHB8876	15	1			
8	Squab assembly—rear—yellow with black piping		AHB8400	15	1			
9	Frame assembly—rear squab		AHB8348	16	1			
10	Channel assembly—rear squab retaining		4B8380	17	2			
11	Screw fixing channel		PMZ0310	18	4			
12	Washer—plain—screw		PWZ103	19	4			
13	Washer—spring—screw		LWZ203	20	4			
14	Plate—rear squab board retaining		14B8493	21	2			

	DESCRIPTION	Commencing (C) 101 Part Number	Illus. No.	Quantity	MODIFICATIONS New Part Number	MODIFICATIONS Change Point	REMARKS
	BODY MOULDINGS						
1	**Surround assembly—air intake**	**14B5777**	1	1	AHB9005	Com. (C) 13751	
2	**Grille—air intake**	**14B5779**	2	1			
3	Nut—surround and grille	FNZ103	3	3			
4	Washer—plain—nut	PWZ103	4	3			
5	Washer—spring—nut	LWZ203	5	3			
6	Washer—packing	14B9484	6	3			
7	**Flash—body side RH**	**14B1727**	7	1			
8	**Flash—body side LH**	**14B1728**		1			
9	Nut—flash	FNZ103	8	6			
10	Washer—plain—nut	PWZ103	9	6			
11	Washer—spring—nut	LWZ203	10	6			
12	**Badge—'Austin-Healey'**	**14B1723**	11	1		Fin. (C) 13750	Part No. change; was 14B1998
13	Push-on fix—badge	ADB509	12	2			
14	**Motif—'Austin-Healey 3000 Mk. II'**		13	1	AHB9014	Com. (C) 13751	
15	Nut—motif to cowl centre panel		14	2	FNZ103		
16	Washer—plain—nut		15	2	PWZ103		
17	Washer—spring—nut		16	2	LWZ203		
18	**Hood—radiator grille**	**14B5773**	17	1			
19	Screw—hood	PMP0308	18	2			
20	Washer—plain—screw	PWZ103	19	2			
21	Washer—spring—screw	LWZ203	20	2			
22	Nut—screw	FNZ104	21	2		Fin. (C) 13750	
23	**Grille assembly—radiator**	**14B5759**	22	1			
24	Screw—grille to cowl centre panel	HZS0405	23	6			
25	Washer—plain—screw	PWZ104	24	6			
26	Washer—spring—screw	LWZ204	25	6			
27	**Moulding—radiator grille**	**14B5796**	26	1			
28	**Motif—'3000'**	**AHB8861**	27	1			
29	Clip—tubular—motif	97H510	28	2			
30	**Hood assembly—radiator grille**		29	1	**AHB9001**		
31	Nut—hood to body		30	2	CNZ102		
32	Washer—plain—nut		31	2	PWZ102		
33	Washer—spring—nut		32	2	LWZ202		
34	Screw—hood to body		33	1	HZS0405		
35	Washer—spring—screw		34	1	LWZ204	Com. (C) 13751	
36	**Slat assembly—radiator grille**		35	1	**AHB9000**		
37	Slat		36	39	AHB9011		
38	Rivet—slat to rail		37	156	DMP2824		
39	**Surround assembly—radiator grille**		38	1	**AHB8999**	Com. (C) 13751	
40	Screw—surround to slats		39	1	HZS0405	Fin. (C) 14585	
						Com. (C) 14586	Quantities increased at (C) 14586
41	Stud—surround to slats		40	1	AHB9209	Com. (C) 13751	
42	Nut—screw and stud		41	1/2	FNZ104		
43	Washer—spring—nut		42	1/2	LWZ204		
44	Washer—plain—nut		43	1/2	PWZ104		

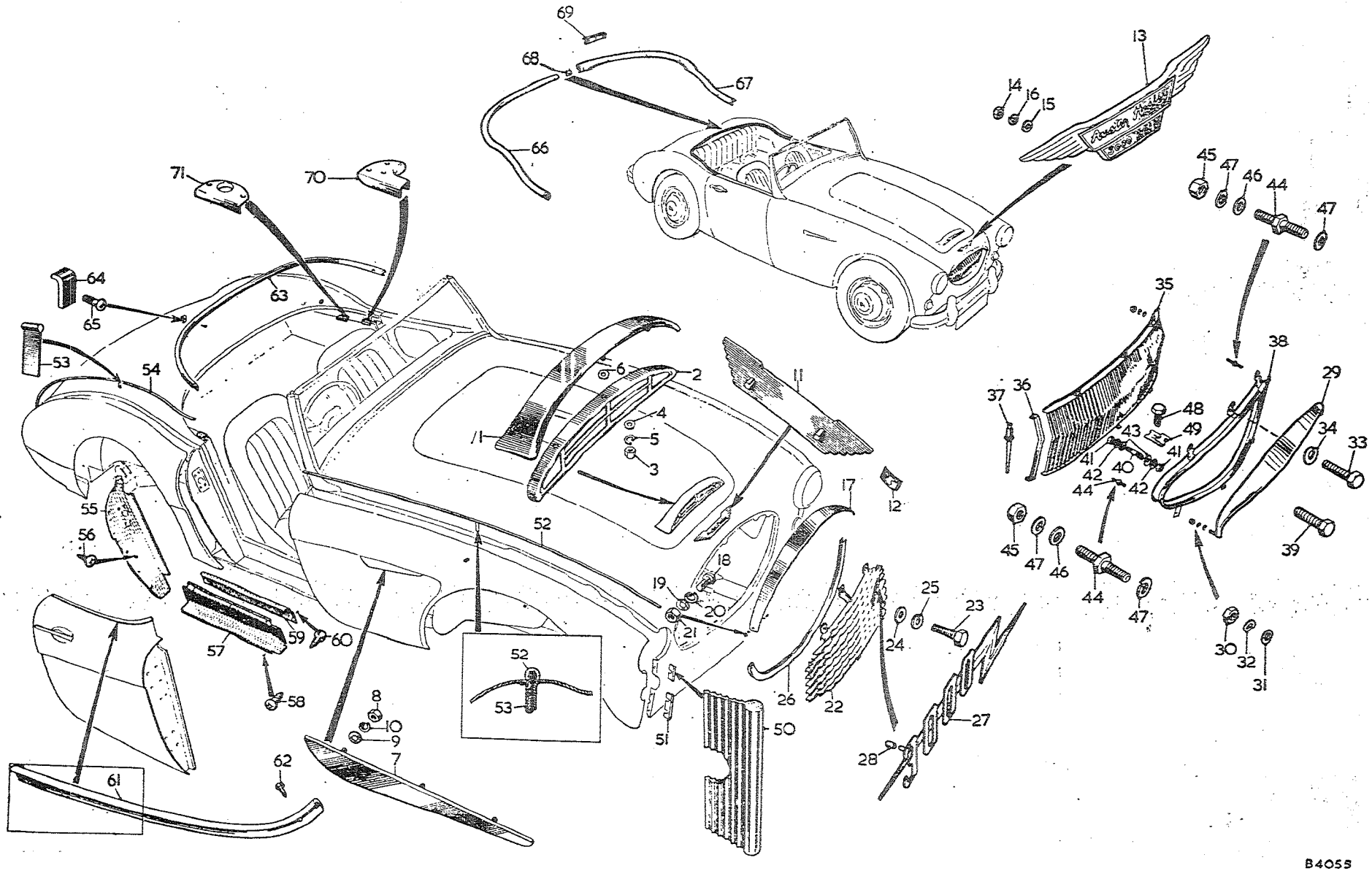

To face page R.24

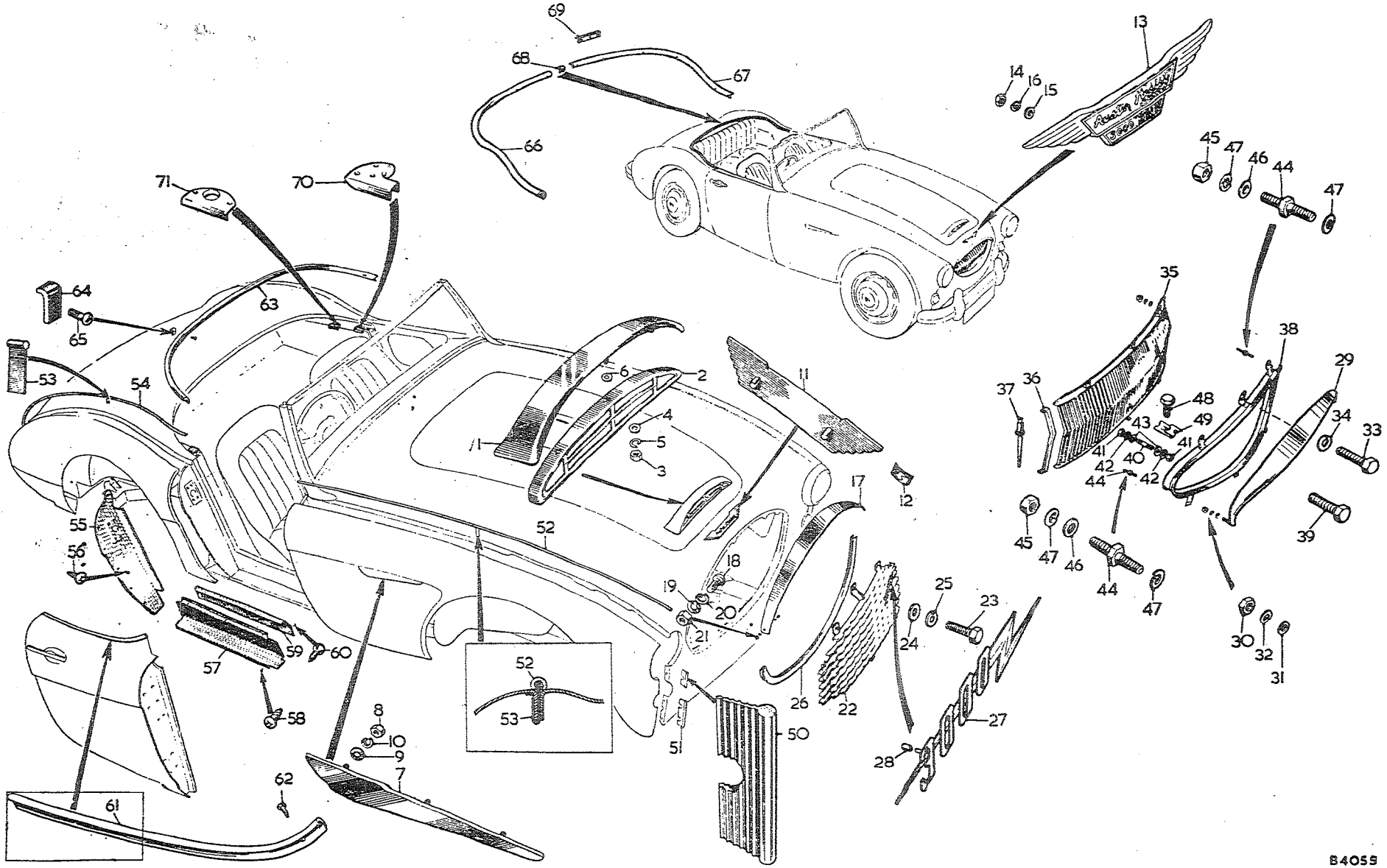

To face page R.25

Item No.	DESCRIPTION		Commencing (C) 101 Part Number	Commencing (C) 101 Illus. No.	Quantity	MODIFICATIONS New Part Number	MODIFICATIONS Change Point	REMARKS
	Body Mouldings—*continued*							
1	Stud—slats and surround—bottom			44	2	AHB9019	Com. (C) 13751	
2	Stud—slats, surround and hood—top			44	2	AHB9019		
						AHB9209	Com. (C) 14586	
3	Nut—stud			45	4/6	FNZ104		Quantity increased at (C) 14586
4	Washer—plain—nut			46	4/6	PWZ104		
5	Washer—spring—nut			47	8	LWZ204	Com. (C) 13751	
6	Bolt—slat assembly to body			48	2	ABZ0404		
7	Nut—spire—bolt			49	2	6K9817		
8	Piping—front wing upper (plastic)		14B6824	50	2			
9	Piping—front wing lower (plastic)		14B6825	51	2			
10	Piping—front wing		14B6729	52	2			
11	Tab fixing piping to front wing		4G7614	53	24			
12	Piping—rear quarter		14B1708	54	2			
13	Tab fixing piping		4G7614	53	16			
14	Cover plate—shut pillar panel—RH		24B876	55	1			
15	Cover plate—shut pillar panel—LH		24B877		1			
16	Screw fixing cover plate		54K3024	56	16			
17	Screw fixing cover plate		AHB8384		2			
18	Cover plate—sill panel—outer—RH		14B6765	57	1			
19	Cover plate—sill panel—outer—LH		14B6766		1			
20	Screw fixing cover plate		54K3024	58	16			
21	Tread plate—sill panel—inner RH		24B880	59	1			
22	Tread plate—sill panel—inner LH		24B881		1			
23	Screw fixing tread plate		53K3024	60	8			
24	Moulding—door cockpit—RH		14B5876	61	1			
25	Moulding—door cockpit—LH		14B5877		1			
26	Screw fixing moulding		RTP806	62	6			
27	Moulding—cockpit rear		24B774	63	1			
28	Plate—tapped	BN7	14B7785	14	5			
29	Screw fixing moulding $\frac{3}{4}$" (19·05 mm.)	BN7	RPP0312	65	4			
30	Screw fixing moulding $\frac{5}{8}$" (15·87 mm.)	BN7	RJP1005		3			
31	Moulding—cockpit rear—RH	BN7	14B8523	66	1			
32	Moulding—cockpit rear—LH	BN7	14B8524	67	1			
33	Moulding—cockpit rear—centre	BN7	14B8525	68	1			
34	Plate—joint—centre moulding	BN7	14B8711	69	1			
35	Plate—tapped—rear moulding	BN7	14B7785	64	6			
36	Screw—fixing moulding	BN7	RPP0312	65	9			
37	Nut—screw	BN7	FNZ103		3			
38	Washer—plain—nut	BN7	PWZ103		3			
39	Washer—spring—nut	BN7	LWZ203		3			
40	Screw—moulding	BN7	RJP1005		2			
41	Plate—hardtop surround finisher—RH	BT7	24B1677	70	1			
42	Plate—hardtop surround finisher—LH	BT7	24B1678		1			
43	Plate—hood surround socket finisher	BT7	24B1679	71	2			

Item No	DESCRIPTION		Commencing (C) 101 Part Number	Illus. No.	Quantity	MODIFICATIONS New Part Number	MODIFICATIONS Change Point	REMARKS
	TRIMMING							
1	**Carpet—front floor RH—red**		**4B3180**	1	1	**AHB9278**		
2	Carpet—front floor RH—blue		AHB5410		1	AHB9279	Com. (C) 16039 BN7, 15881 BT7	
3	Carpet—front floor RH—black		AHB5411		1	AHB9280		
4	Carpet—front floor RH—green		AHB5412		1	AHB9281		
5	Pad—heel (rubber)		2H6961	2	1			
6	Fastener		2H8445	3	4			
7	Ring—spiked	RHD	2H6136	4	4			
8	**Carpet—front floor LH—red**		LB3183	5	1	**AHB9286**		
9	Carpet—front floor LH—blue		AHB5413		1	AHB9287	Com. (C) 16039 BN7, 15881 BT7	USE AHB9303 PA.U 2582
10	Carpet—front floor LH—black		AHB5414		1	AHB9288		
11	Carpet—front floor LH—green		AHB5415		1	AHB9289		
12	Fastener		2H8445	3	4			
13	Ring—spiked		2H6136	4	4			
14	**Carpet—front floor RH—red**		**4B3182**		1	**AHB9294**		
15	Carpet—front floor RH—blue		AHB5416		1	AHB9295	Com. (C) 16039 BN7, 15881 BT7	
16	Carpet—front floor RH—black		AHB5417		1	AHB9296		
17	Carpet—front floor RH—green		AHB5418		1	AHB9297		
18	Fastener		2H8445	3	4			
19	Ring—spiked		2H6136	4	4			
20	**Carpet—front floor LH—red**	LHD	**4B3183**		1	**AHB9302**		
21	Carpet—front floor LH—blue		AHB5419		1	AHB9303	Com. (C) 16039 BN7 15881 BT7	
22	Carpet—front floor LH—black		AHB5420		1	AHB9304		
23	Carpet—front floor LH—green		AHB5421		1	AHB9305		
24	Pad—heel (rubber)		2H6961	2	1			
25	Fastener		2H8445	3	4			
26	Ring—spiked		2H6136	4	4			
27	**Carpet—rear floor RH—red**		**24B1795**	6	1	**AHB9326**		
28	Carpet—rear floor RH—blue	BN7	AHB5895		1	AHB9327	Com (C) 16039	
29	Carpet—rear floor RH—black		AHB5896		1	AHB9328		
30	Carpet—rear floor RH—green		AHB5897		1	AHB9329		
31	**Carpet—rear floor RH—red**		**AHB8429**	7	1	**AHB9310**		
32	Carpet—rear floor RH—blue	BT7	AHB8430		1	AHB9311	Com. (C) 15881	
33	Carpet—rear floor RH—black		AHB8431		1	AHB9312		
34	Carpet—rear floor RH—green		AHB8432		1	AHB9313		
35	Fastener		2H8445	3	2			
36	Ring—spiked		2H6136	4	2			
37	**Carpet—rear floor LH—red**		**24B1796**	8	1	**AHB9330**		
38	Carpet—rear floor LH—blue	BN7	AHB5898		1	AHB9331	Com. (C) 16039	
39	Carpet—rear floor LH—black		AHB5899		1	AHB9332		
40	Carpet—rear floor LH—green		AHB5900		1	AHB9333		

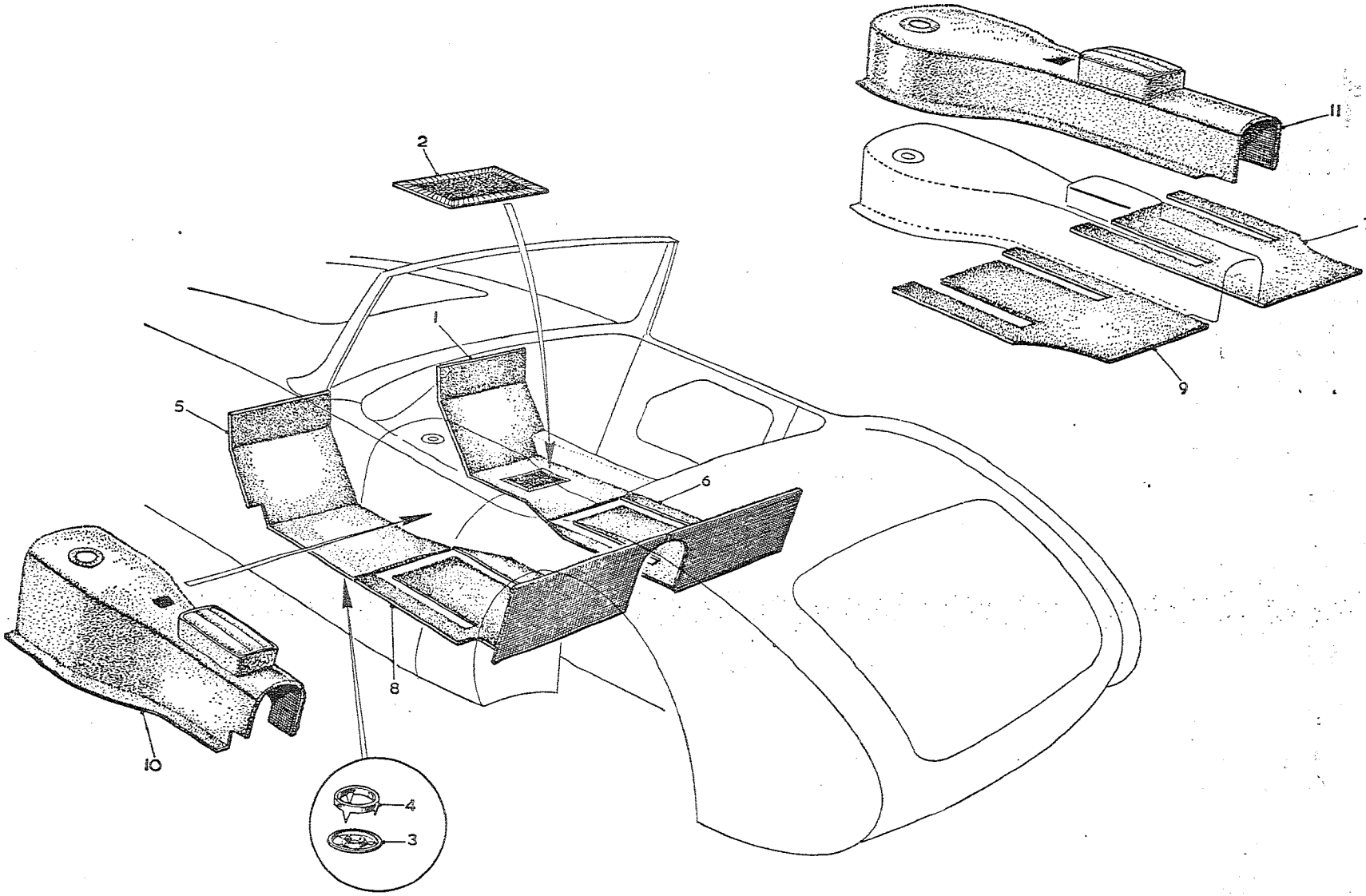

To face page R.26

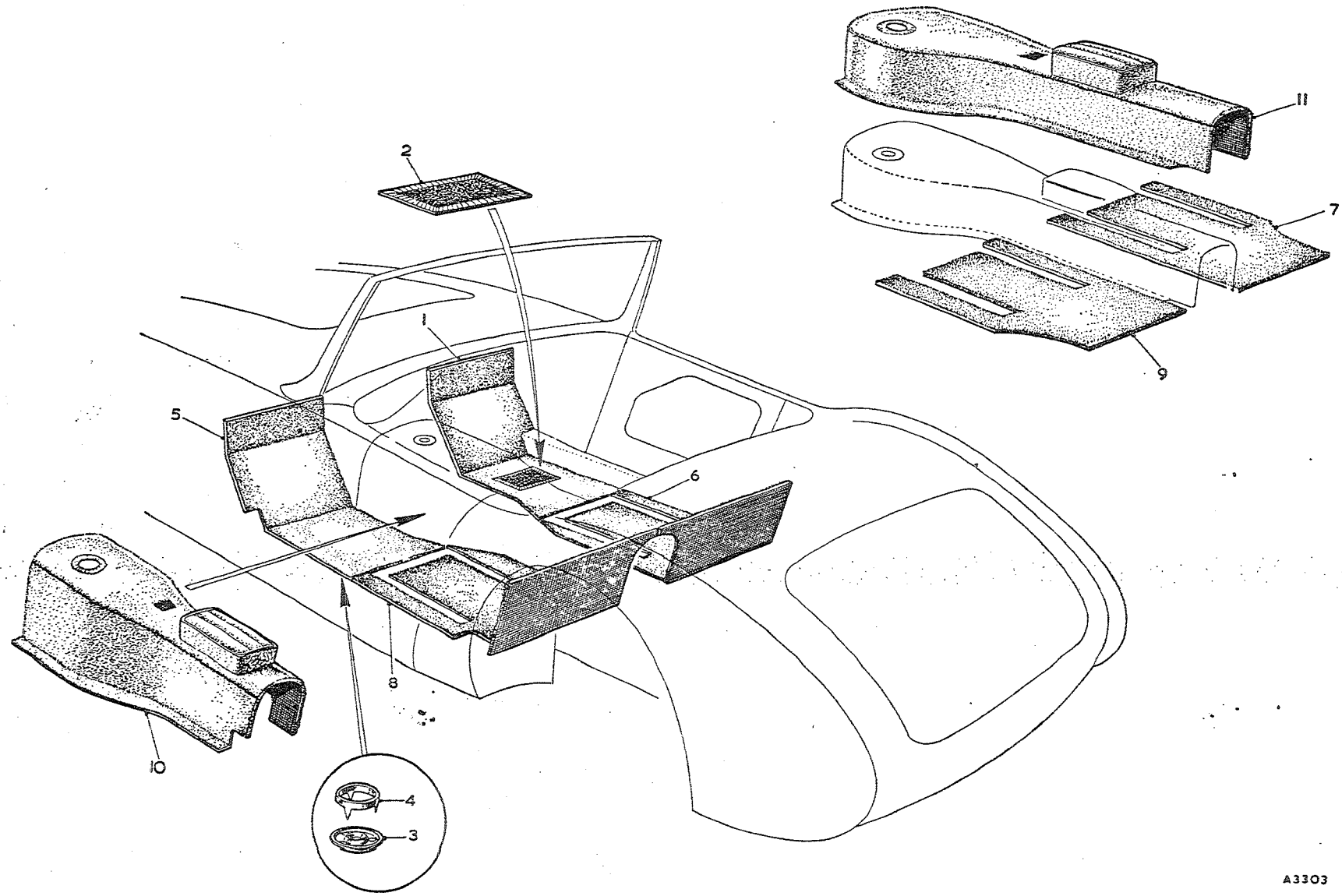

To face page R.27

Item No.	DESCRIPTION		Commencing (C) 101 Part Number	Commencing (C) 101 Illus. No.	Quantity	MODIFICATIONS New Part Number	MODIFICATIONS Change Point	REMARKS
	Trimming—*continued*							
1	**Carpet—rear floor LH—red**		**AHB8439**	9	1	**AHB9318**		
2	Carpet—rear floor LH—blue	BT7	AHB8440		1	AHB9319	Com. (C) 15881	
3	Carpet—rear floor LH—black		AHB8441		1	AHB9320		
4	Carpet—rear floor LH—green		AHB8442		1	AHB9321		
5	Fastener		2H8445	3	2			
6	Ring—spiked		2H6136	4	2			
7	**Carpet—gearbox—red and armrest pad assembly—red with black piping**							
8	Carpet—gearbox—red and armrest pad assembly—grey with red piping		**AHB5947**	10	1	**AHB9359**		
9	Carpet—gearbox—red and armrest pad assembly—red with white piping		AHB8293		1	AHB9360		
10	Carpet—gearbox—blue and armrest pad assembly—blue with white piping		AHB8294		1	AHB9361		
11	Carpet—gearbox—black and armrest pad assembly—red with black piping	BN7	AHB5948		1	AHB9362		
12	Carpet—gearbox—black and armrest pad assembly—black with white piping		AHB5949		1	AHB9363	Com. (C) 16039	
13	Carpet—gearbox—black and armrest pad assembly—black with yellow piping		AHB8295		1	AHB9364		
14	Carpet—gearbox—black and armrest pad assembly—yellow with black piping		AHB8296		1	AHB9365		
15	Carpet—gearbox—green and armrest pad assembly—grey with green piping		AHB8297		1	AHB9366		
16	**Carpet—gearbox—red and armrest pad assembly—red with black piping**		AHB5950		1	AHB9367		
17	Carpet—gearbox—red and armrest pad assembly—grey with red piping		**AHB8487**	11	1	**AHB9334**		
18	Carpet—gearbox—red and armrest pad assembly—red with white piping		AHB8488		1	AHB9335		
19	Carpet—gearbox—blue and armrest pad assembly—blue with white piping		AHB8489		1	AHB9336		
20	Carpet—gearbox—black and armrest pad assembly—red with black piping	BT7	AHB8490		1	AHB9337		
21	Carpet—gearbox—black and armrest pad assembly—black with white piping		AHB8491		1	AHB9338	Com. (C) 15881	
22	Carpet—gearbox—black and armrest pad assembly—black with yellow piping		AHB8492		1	AHB9339		
23	Carpet—gearbox—black and armrest pad assembly—yellow with black piping		AHB8493		1	AHB9340		
24	Carpet—gearbox—green and armrest pad assembly—grey with green piping		AHB8494		1	AHB9341		
25	Fastener		AHB8495		1	AHB9342		
26	Ring—spiked		2H8445	4	4/9			Quantity increased at (C) 16039 BN7, 15881 BT7
			2H6136	4	4/9			

Item No.	DESCRIPTION		Commencing (C) 101 Part Number	Illus. No.	Quantity	MODIFICATIONS New Part Number	MODIFICATIONS Change Point	REMARKS
	Trimming—*continued*							
1	**Tray assembly—parcel—red with red carpet**	RHD	**4B3172**	1	1			
2	Tray assembly—parcel—red with black carpet	RHD	AHB8860		1			
3	Tray assembly—parcel—blue with blue carpet	RHD	AHB5434		1			
4	Tray assembly—parcel—black with black carpet	RHD	AHB5435		1			
5	Tray assembly—parcel—grey with green carpet	RHD	AHB5436		1			
6	Tray assembly—parcel—grey with red carpet	RHD	AHB8859		1			
7	Tray assembly—parcel—yellow with black carpet	RHD	AHB5437		1			
8	**Tray assembly—parcel—red with red carpet**	LHD	**4B4124**		1			
9	Tray assembly—parcel—red with black carpet	LHD	AHB8871		1			
10	Tray assembly—parcel—blue with blue carpet	LHD	AHB5438		1			
11	Tray assembly—parcel—black with black carpet	LHD	AHB5439		1			
12	Tray assembly—parcel—grey with green carpet	LHD	AHB5440		1			
13	Tray assembly—parcel—grey with red carpet	LHD	AHB8872		1			
14	Tray assembly—parcel—yellow with black carpet	LHD	AHB5441		1			
15	Screw—tray		PMP0308		1			
16	Nut—screw		FNZ103		1			
17	Washer—plain—nut		PWZ103		1			
18	Washer—spring—nut		LWZ203		1			
19	Screw—tray—$\frac{3}{8}$" (9·52 mm.)		PTZ803		4			
20	Screw—tray—$\frac{1}{2}$" (12·7 mm.)		PTZ804		3			
21	**Bracket—parcel tray support**		**14B6816**	2	1			
22	Screw—bracket		PMZ0307		1			
23	Nut—screw		FNZ103		1			
24	Washer—plain—nut		PWZ103		1			
25	Washer—spring—nut		LWZ203		1			
26	**Bracket—choke control**		**14B7581**	3	1			
27	Screw—choke control bracket to parcel tray support bracket		PMZ0308		2		Fin. (C) 2193 also 2446, 2457	
28	Nut—screw		FNZ103		2			
29	Washer—plain—nut		PWZ103		4			
30	Washer—spring—nut		LWZ203		2			
31	**Liner assembly—door RH—red**		**4B3207**	4	1			
32	Liner assembly—door—RH—blue		AHB5442		1			
33	Liner assembly—door RH—black		AHB5443		1			
34	Liner assembly—door RH—grey		AHB5444		1			
35	Liner assembly—door RH—yellow		AHB5445		1			
36	**Liner assembly—door LH—red**		**4B3208**		1			
37	Liner assembly—door LH—blue		AHB5446		1			
38	Liner assembly—door LH—black		AHB5447		1			
39	Liner assembly—door LH—grey		AHB5448		1			
40	Liner assembly—door LH—yellow		AHB5449		1			
41	Screw—liner		RJP604		24			Part No. change; was 54K3014
42	Washer—screw		FWP406		24			Part No. change; was 6K9062

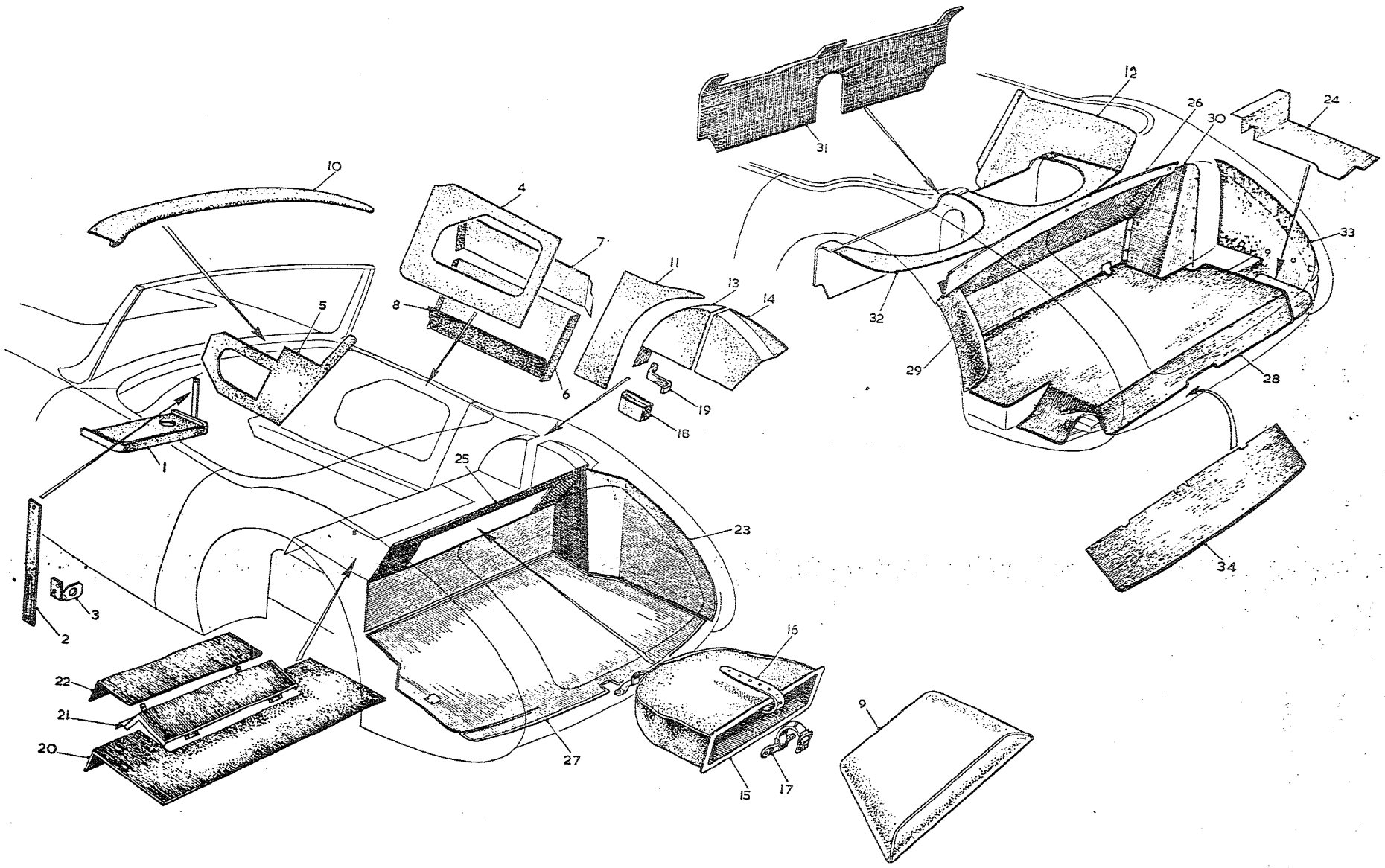

To face page R.28

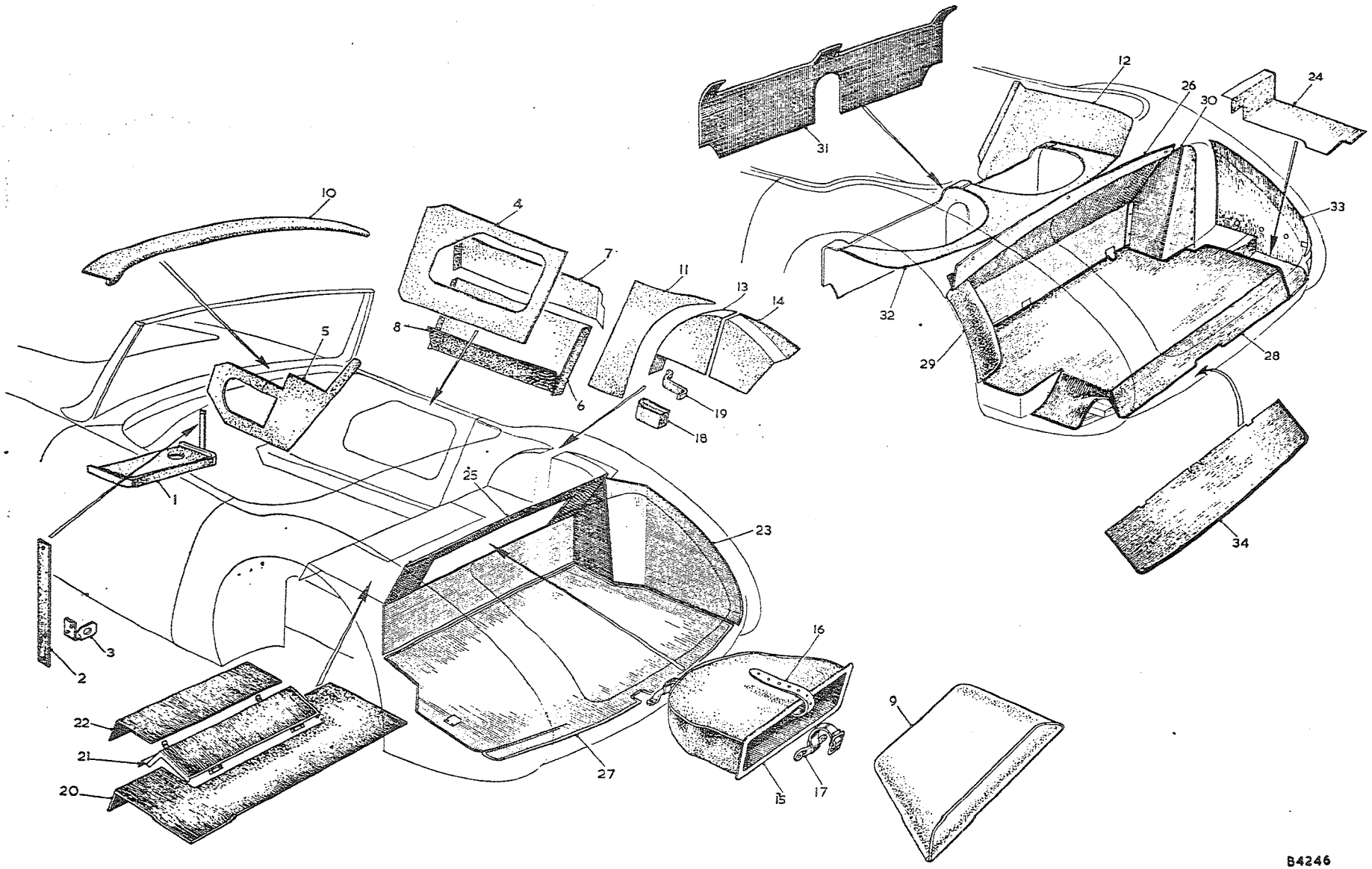

To face page R.29

Item No.	DESCRIPTION	Commencing (C) 101 Part Number	Illus. No.	Quantity	MODIFICATIONS New Part Number	MODIFICATIONS Change Point	REMARKS
	Trimming—*continued*						
1	**Liner assembly—scuttle RH—red**	**4B3215**	5	1			
2	Liner assembly—scuttle RH—blue	AHB5450		1			
3	Liner assembly—scuttle RH—black	AHB5451		1			
4	Liner assembly—scuttle RH—grey	AHB5452		1			
5	Liner assembly—scuttle RH—yellow	AHB5453		1			
6	**Liner assembly—scuttle LH—red**	**4B3247**		1			
7	Liner assembly—scuttle LH—blue	AHB5454		1			
8	Liner assembly—scuttle LH—black	AHB5455		1			
9	Liner assembly—scuttle LH—grey	AHB5456		1			
10	Liner assembly—scuttle LH—yellow	AHB5457		1			
11	Screw—liner—$\frac{1}{2}$" (12·7 mm.)	RJP604		7			Part No. change; was 54K3014
12	Screw—liner—$\frac{3}{4}$" (19·05 mm.)	RJP606		3			Part No. change; was 54K3016
13	Washer—screw	FWP406		10			Part No. change; was 6K9062
14	**Liner assembly—door inner lower RH—red**	**4B3217**	6	1			
15	Liner assembly—door inner lower RH—blue	AHB5458		1			
16	Liner assembly—door inner lower RH—black	AHB5459		1			
17	Liner assembly—door inner lower RH—grey	AHB5460		1			
18	Liner assembly—door inner lower RH—yellow	AHB5461		1			
19	**Liner assembly—door inner lower LH—red**	**4B3218**		1			
20	Liner assembly—door inner lower LH—blue	AHB5462		1			
21	Liner assembly—door inner lower LH—black	AHB5463		1			
22	Liner assembly—door inner lower LH—grey	AHB5464		1			
23	Liner assembly—door inner lower LH—yellow	AHB5465		1			
24	**Liner assembly—door inner upper RH—red**	**4B3219**	7	1			
25	Liner assembly—door inner upper RH—blue	AHB5466		1			
26	Liner assembly—door inner upper RH—black	AHB5467		1			
27	Liner assembly—door inner upper RH—grey	AHB5468		1			
28	Liner assembly—door inner upper RH—yellow	AHB5469		1			
29	**Liner assembly—door inner upper LH—red**	**4B3220**		1			
30	Liner assembly—door inner upper LH—blue	AHB5470		1			
31	Liner assembly—door inner upper LH—black	AHB5471		1			
32	Liner assembly—door inner upper LH—grey	AHB5472		1			
33	Liner assembly—door inner upper LH—yellow	AHB5473		1			
34	Screw—liner	RWP605		6			
35	Washer—screw	FWP406		6			
36	**Fillet assembly—door inner lower RH—red**	**4B3221**	8	1			Part No. change; was 6K9062
37	Fillet assembly—door inner lower RH—blue	AHB5474		1			
38	Fillet assembly—door inner lower RH—black	AHB5475		1			
39	Fillet assembly—door inner lower RH—grey	AHB5476		1			
40	Fillet assembly—door inner lower RH—yellow	AHB5477		1			
41	**Fillet assembly—door inner lower LH—red**	**4B3222**		1			
42	Fillet assembly—door inner lower LH—blue	AHB5478		1			
43	Fillet assembly—door inner lower LH—black	AHB5479		1			
44	Fillet assembly—door inner lower LH—grey	AHB5480		1			
45	Fillet assembly—door inner lower LH—yellow	AHB5481		1			

Item No.	DESCRIPTION		Commencing (C) 101 Part Number	Commencing (C) 101 Illus. No.	Quantity	MODIFICATIONS New Part Number	MODIFICATIONS Change Point	REMARKS
	Trimming—*continued*							
1	**Case assembly—side window—black**		**AHB5483**	**9**	**1**			
2	**Liner assembly—scuttle top—red with white piping**	BN7	**4B4211**	**10**	**1**			
3	Liner assembly—scuttle top—red with black piping	BN7	AHB8886		1			
4	Liner assembly—scuttle top—blue with white piping	BN7	AHB5486		1			
5	Liner assembly—scuttle top—black with white piping	BN7	AHB5487		1			
6	Liner assembly—scuttle top—black with yellow piping	BN7	AHB8887		1			
7	Liner assembly—scuttle top—grey with green piping	BN7	AHB5488		1			
8	Liner assembly—scuttle top—grey with red piping	BN7	AHB8888		1			
9	Liner assembly—scuttle top—yellow with black piping	BN7	AHB5489		1			
10	**Liner assembly—scuttle top—red with white piping**	BT7	**4B3226**		**1**			
11	Liner assembly—scuttle top—red with black piping	BT7	AHB8854		1			
12	Liner assembly—scuttle top—blue with white piping	BT7	AHB8610		1			
13	Liner assembly—scuttle top—black with white piping	BT7	AHB8611		1			
14	Liner assembly—scuttle top—black with yellow piping	BT7	AHB8855		1			
15	Liner assembly—scuttle top—grey with green piping	BT7	AHB8612		1			
16	Liner assembly—scuttle top—grey with red piping	BT7	AHB8856		1			
17	Liner assembly—scuttle top—yellow with black piping	BT7	AHB8613		1			
18	Screw—liner		CTP605		2			
19	Washer—screw		FWP406		2			Part No. change; was 6K9062
20	Turn button—single		14A6536		2			Part No. change; was 8F2480
21	Screw—turn button		RTP606		4			
22	Fastener—bottom portion		TFP1010		1			Part No. change; was 14B2878

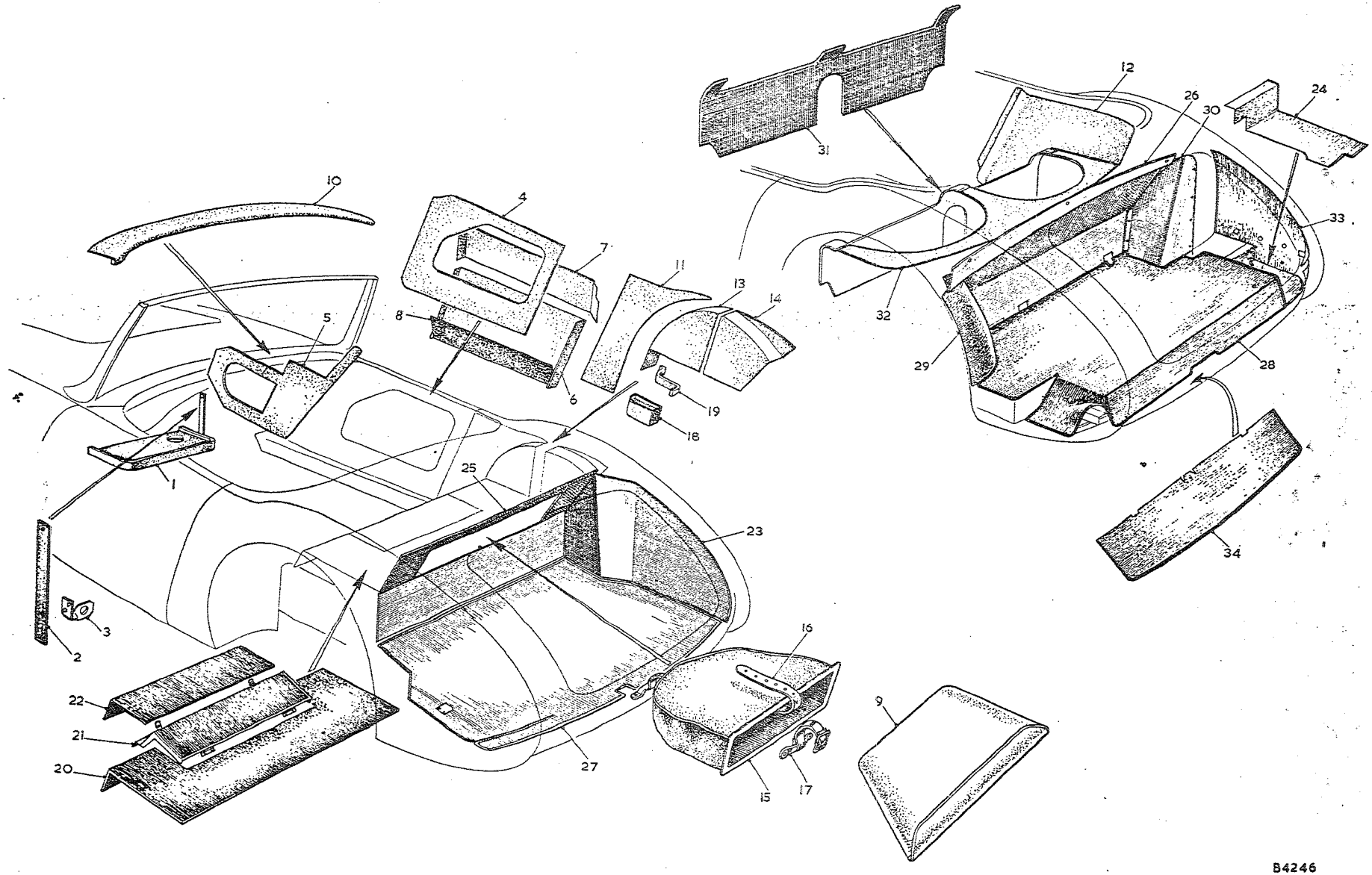

To face page R.30

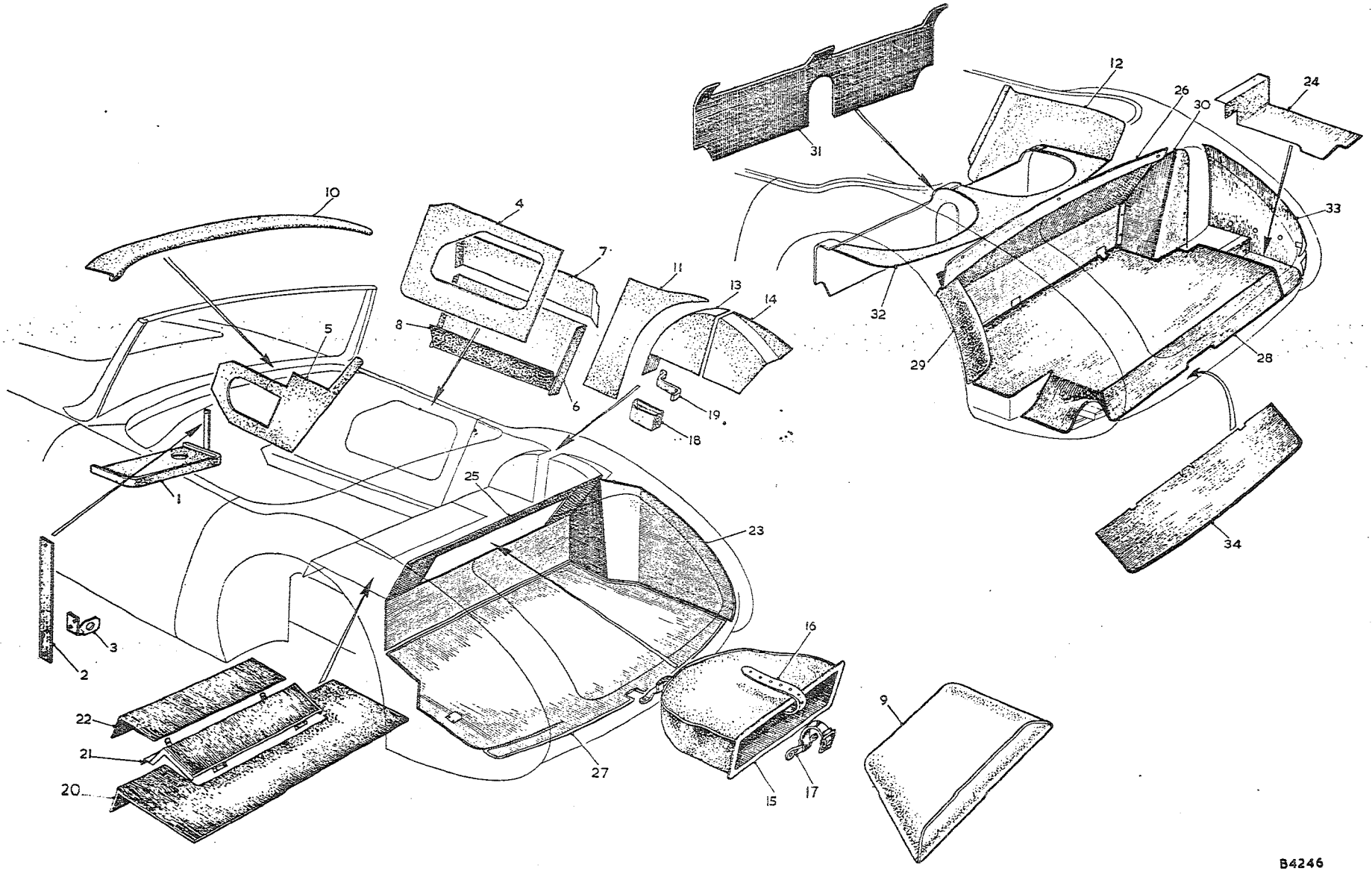

To face page R.31

Item No.	DESCRIPTION		Commencing (C) 101 Part Number	Illus. No.	Quantity	MODIFICATIONS New Part Number	MODIFICATIONS Change Point	REMARKS
	Trimming—*continued*							
1	**Liner assembly—rear quarter cockpit RH—red**		**4B5123**	11	1			
2	Liner assembly—rear quarter cockpit RH—blue		AHB5490		1			
3	Liner assembly—rear quarter cockpit RH—black		AHB5491		1			
4	Liner assembly—rear quarter cockpit RH—grey		AHB5492		1			
5	Liner assembly—rear quarter cockpit RH—yellow		AHB5493		1			
6	**Liner assembly—rear quarter cockpit LH—red**		**4B5124**		1			
7	Liner assembly—rear quarter cockpit LH—blue		AHB5494		1			
8	Liner assembly—rear quarter cockpit LH—black	BN7	AHB5495		1			
9	Liner assembly—rear quarter cockpit LH—grey		AHB5496		1			
10	Liner assembly—rear quarter cockpit LH—yellow		AHB5497		1			
11	Screw—liner—$\frac{3}{4}$ (19·05 mm.)		CWZ806		10			
12	Screw—liner—$\frac{5}{8}$ (15·87 mm.)		RJP605		6			
13	Screw—liner—$\frac{1}{2}$ (12·7 mm.)		RJP604		4			
14	Washer—screw		FWP406		10			
15	Screw—liner—$1\frac{1}{4}$ (31·75 mm.)		CTZ601		4			Part No. change; was 6K9062
16	**Liner assembly—rear quarter RH—red**		**AHB8447**	12	1			
17	Liner assembly—rear quarter RH—blue		AHB8448		1			
18	Liner assembly—rear quarter RH—black		AHB8449		1			
19	Liner assembly—rear quarter RH—grey		AHB8450		1			
20	Liner assembly—rear quarter RH—yellow	BT7	AHB8451		1			
21	**Liner assembly—rear quarter LH—red**		**AHB8457**		1			
22	Liner assembly—rear quarter LH—blue		AHB8458		1			
23	Liner assembly—rear quarter LH—black		AHB8459		1			
24	Liner assembly—rear quarter LH—grey		AHB8460		1			
25	Liner assembly—rear quarter LH—yellow		AHB8461		1			
26	**Liner assembly—rear wheelarch cockpit RH—red**		**4B5125**	13	1			
27	Liner assembly—rear wheelarch cockpit RH—blue		AHB5498		1			
28	Liner assembly—rear wheelarch cockpit RH—black		AHB5499		1			
39	Liner assembly—rear wheelarch cockpit RH—grey		AHB5500		1			
30	Liner assembly—rear wheelarch cockpit RH—yellow		AHB5501		1			
31	**Liner assembly—rear wheelarch cockpit LH—red**	BN7	**4B5126**		1			
32	Liner assembly—rear wheelarch cockpit LH—blue		AHB5502		1			
33	Liner assembly—rear wheelarch cockpit LH—Black		AHB5503		1			
34	Liner assembly—rear wheelarch cockpit LH—grey		AHB5504		1			
35	Liner assembly—rear wheelarch cockpit LH—yellow		AHB5505		1			
36	Screw—liner		RJP604		2			
37	Washer—screw		FWP406		2			Part No. change; was 6K9062

Item No.	DESCRIPTION		Commencing (C) 101 Part Number	Illus. No.	Quantity	MODIFICATIONS New Part Number	MODIFICATIONS Change Point	REMARKS
	Trimming—*continued*							
1	**Liner assembly—rear wheelarch RH—red**		**4B5127**	14	1			
2	Liner assembly—rear wheelarch RH—blue		AHB5506		1			
3	Liner assembly—rear wheelarch RH—black		AHB5507		1			
4	Liner assembly—rear wheelarch RH—grey		AHB5508		1			
5	Liner assembly—rear wheelarch RH—yellow		AHB5509		1			
6	**Liner assembly—rear wheelarch LH—red**		**4B5128**		1			
7	Liner assembly—rear wheelarch LH—blue		AHB5510		1			
8	Liner assembly—rear wheelarch LH—black		AHB5511		1			
9	Liner assembly—rear wheelarch LH—grey		AHB5512		1			
10	Liner assembly—rear wheelarch LH—yellow		AHB5513		1			
11	**Cover assembly—spare wheel—red**		**4B5122**	15	1			**These items replaced by AHB8899/8900/1/2/3/4**
12	Cover assembly—spare wheel—blue		AHB5514		1			
13	Cover assembly—spare wheel—black		AHB5515		1			
14	Cover assembly—spare wheel—grey		AHB5516		1			
15	Cover assembly—spare wheel—yellow		AHB5517		1			
16	**Cover assembly—spare wheel—red carpet with red leather cloth**		**AHB8899**		1			
17	Cover assembly—spare wheel—red carpet with grey leather cloth		AHB8900		1			
18	Cover assembly—spare wheel—blue carpet with blue leather cloth		AHB8901		1			
19	Cover assembly—spare wheel—black carpet with black leather cloth	BN7	AHB8902		1			
20	Cover assembly—spare whee —black carpet with yellow leather cloth		AHB8903		1			
21	Cover assembly—spare wheel—green carpet with grey leather cloth		AHB8904		1			
22	**Strap assembly—spare wheel securing—long**		**24B785**	16	1			
23	Screw—strap		RMP0308		2			
24	Nut—screw		FNZ103		2			
25	Washer—plain—nut		PWZ103		2			
26	**Strap assembly—spare wheel securing—short**		**24B787**	17	1			
27	Screw—strap		RMP0310		2			
28	Washer—plain—screw		PWZ103		2			
29	Washer—spring—screw		LWZ203		2			
30	**Box assembly—hood stowage RH—red with red carpet**		**4B5139**	18	1			
31	Box assembly—hood stowage RH—red with black carpet		AHB8877		1			
32	Box assembly—hood stowage RH—blue with blue carpet		AHB5518		1			
33	Box assembly—hood stowage RH—black with black carpet		AHB5519		1			
34	Box assembly—hood stowage RH—grey with green carpet		AHB5520		1			
35	Box assembly—hood stowage RH—grey with red carpet		AHB8878		1			
36	Box assembly—hood stowage RH—yellow with black carpet		AHB5521		1			

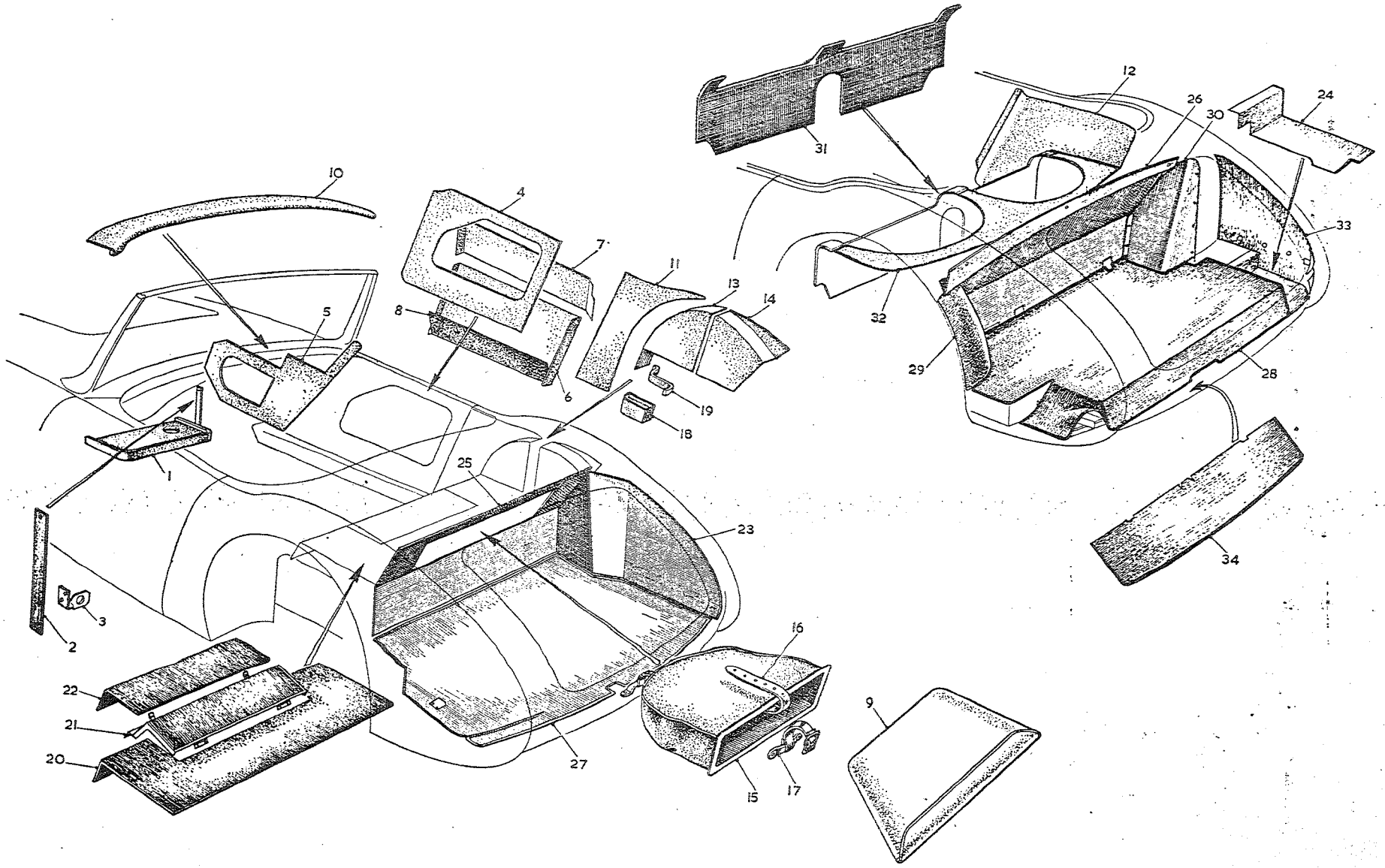

To face page R.32

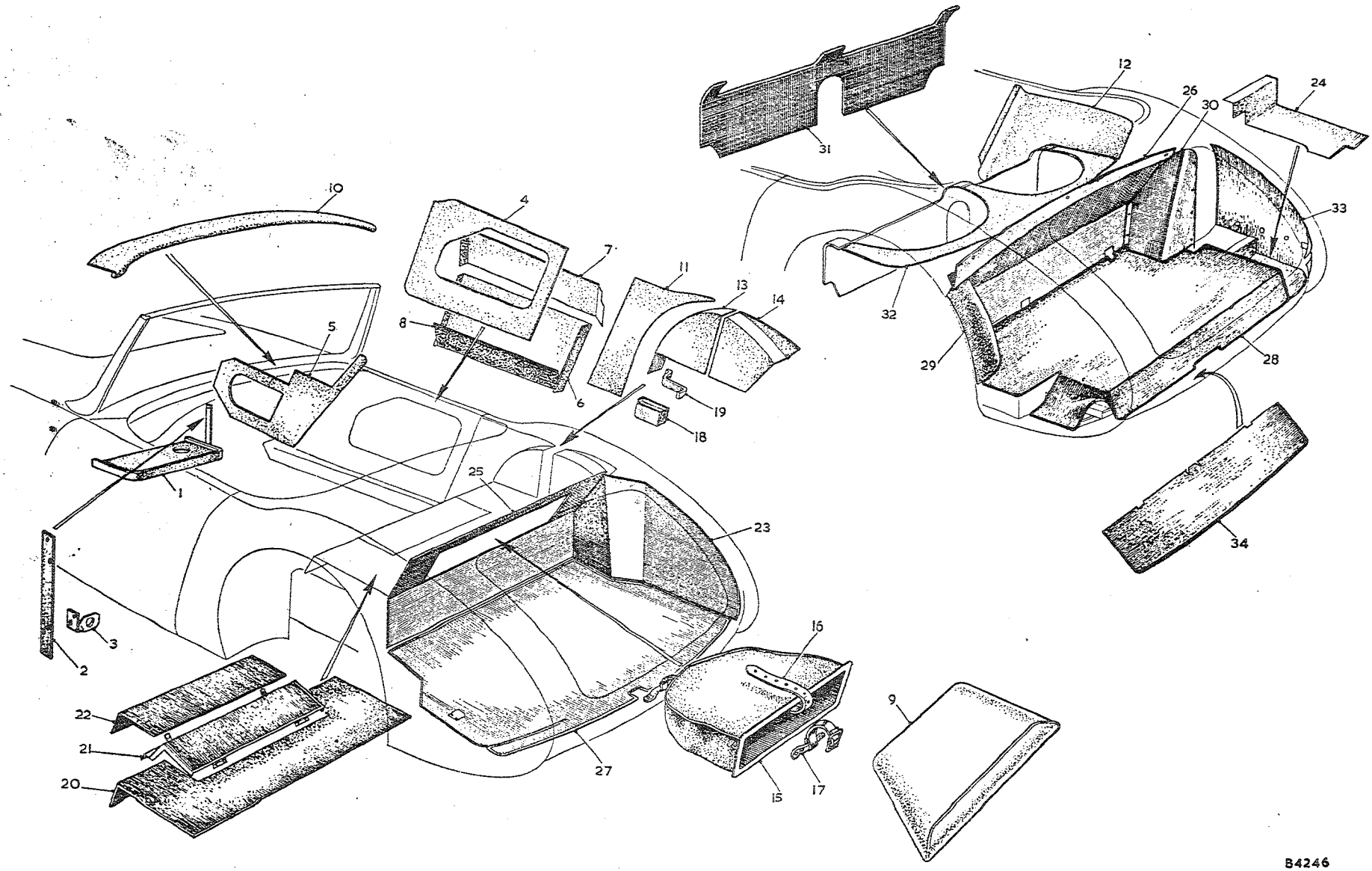

To face page R.33

Item No.	DESCRIPTION		Commencing (C) 101 Part Number	Illus. No.	Quantity	MODIFICATIONS New Part Number	MODIFICATIONS Change Point	REMARKS
	Trimming—*continued*							
1	**Liner assembly—boot rear quarter RH—black**	BN7	**4B5119**	23	1			
2	Liner assembly—boot rear quarter LH—black		4B5120		1			
3	**Covering assembly—boot floor side RH—black**	BT7	**4B3248**	24	1			
4	Covering assembly—boot floor side LH—black		4B3249		1			
5	Liner assembly—rear axle cover panel—boot—black	BN7	4B5121	25	1			
6	Covering assembly—rear axle panel—boot—black	BT7	4B3253	26	1			
7	Liner assembly—boot, floor and tool compartment—black		4B5118	27	1			
8	Screw—boot floor liner	BN7	RTP604		9			Part No. change; was 6K9062
9	Washer—screw		FWP406		9			
10	**Covering assembly—boot main floor—black**		**4B3255**	28	1			
11	Covering—boot rear wheelarch LH—black		14B7829	29	1			
12	Panel—fuel pipe cover—black		14B8708	30	1			
13	Screw fixing panel		PTP604		6			
14	**Covering—seat and heelboard panel—red**		**14B7830**	31	1	WSE ADE 565		(PAU 2575).
15	Covering—seat and heelboard panel—blue		AHB8692		1			
16	Covering—seat and heelboard panel—black		AHB8693		1			
17	Covering—seat and heelboard panel—green	BT7	AHB8844		1	WSE AHB8783		PAU 2575
18	**Covering—rear seat surround—red**		**14B8875**	32	1			
19	Covering—rear seat surround—blue		AHB8696		1	WSE AHB8962		PAU 2575
20	Covering—rear seat surround—black		AHB8697		1			
21	Covering—rear seat surround—green		AHB8837		1	WSE AHB8763		PAU 2575
22	**Covering assembly—rear quarter inner panel—RH—black**		**AHB8641**	33	1			
23	Covering assembly—rear quarter inner panel—LH—black		AHB8653		1			
24	**Covering assembly—rear skirt panel—black**		**AHB8665**	34	1			

Item No.	DESCRIPTION		Commencing (C) 101 Part Number	Commencing (C) 101 Illus. No.	Quantity	MODIFICATIONS New Part Number	MODIFICATIONS Change Point	REMARKS
	Trimming—*continued*							
1	**Box assembly—hood stowage LH—red with red carpet**		**4B5140**		1			
2	Box assembly—hood stowage LH—red with black carpet		AHB8879		1			
3	Box assembly—hood stowage LH—blue with blue carpet		AHB5522		1			
4	Box assembly—hood stowage LH—black with black carpet		AHB5523		1			
5	Box assembly—hood stowage LH—grey with green carpet		AHB5524		1			
6	Box assembly—hood stowage LH—grey with red carpet		AHB8880		1			
7	Box assembly—hood stowage LH—yellow with black carpet		AHB5525		1			
8	Screw—box		54K3215		6			
9	**Strap—hood stowage retaining—red**		**4B5143**	19	2			
10	Strap—hood stowage retaining—blue		AHB5526		2			
11	Strap—hood stowage retaining—black		AHB5527		2			
12	Strap—hood stowage retaining—grey		AHB5528		2			
13	Strap—hood stowage retaining—yellow		AHB5529		2			
14	Screw—strap		54K2995		4			
15	Screw—strap		RPW606		2			
16	**Covering assembly—rear bulkhead—red**	**BN7**	**4B5142**	20	1			
17	Covering assembly—rear bulkhead—blue		AHB5530		1			
18	Covering assembly—rear bulkhead—black		AHB5531		1			
19	Covering assembly—rear bulkhead—grey		AHB5532		1			
20	**Panel assembly—battery access—red**		**4B4210**	21	1			
21	Panel assembly—battery access—blue		AHB5534		1			
22	Panel assembly—battery access—black		AHB5535		1			
23	Panel assembly—battery access—grey		AHB5536		1			
24	**Covering assembly—battery access panel—red**		**AHB8302**	22	1			
25	Covering assembly—battery access panel—blue		AHB8303		1			
26	Covering assembly—battery access panel—black		AHB8304		1			
27	Covering assembly—battery access panel—grey		AHB8305		1			
28	Screw—panel		PMZ0306		4			
29	Nut—screw		FNZ103		4			
30	Washer—plain—nut		PWZ103		4			
31	Washer—spring—nut		LWZ203		4			

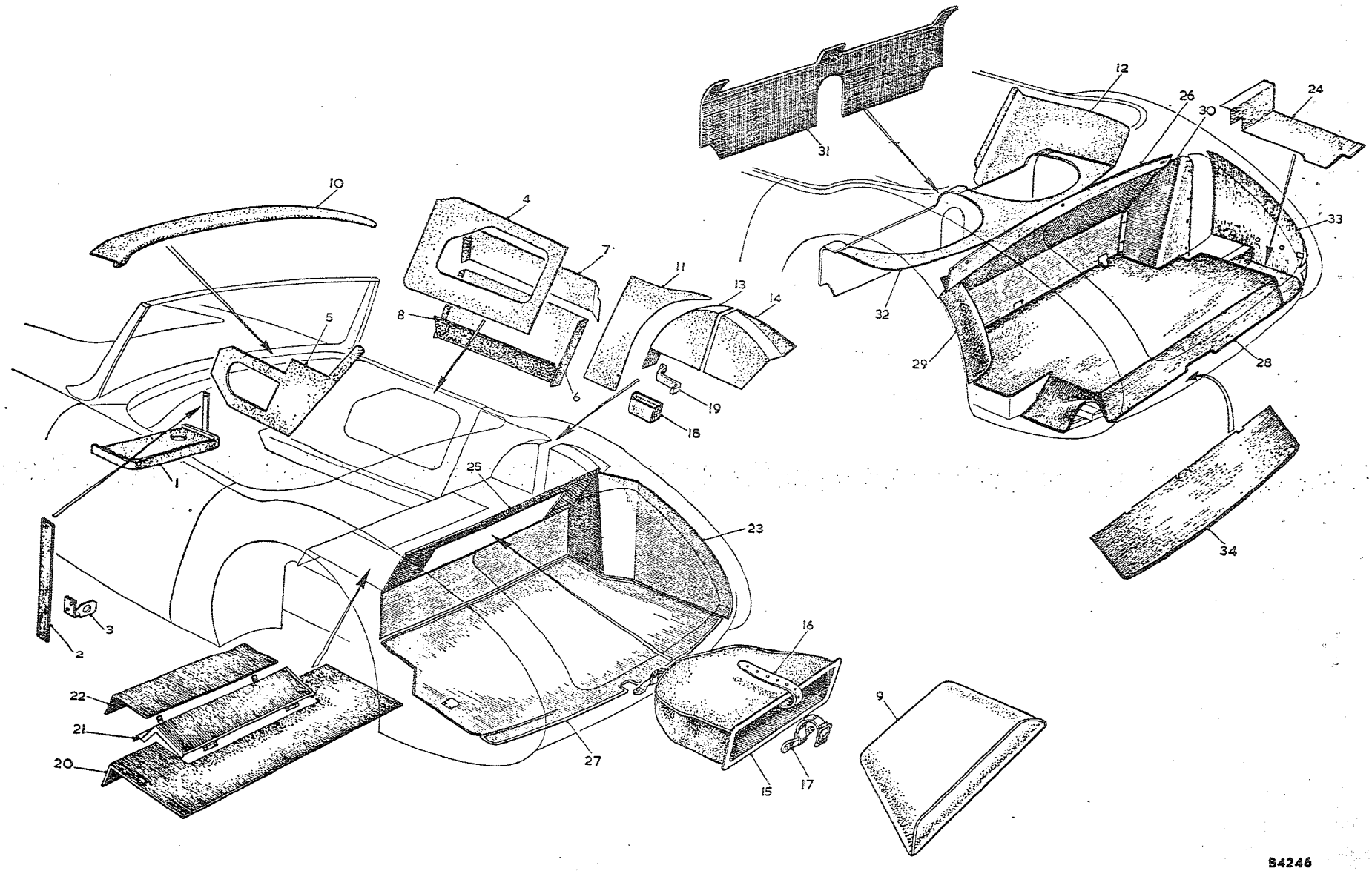

To face page R.34

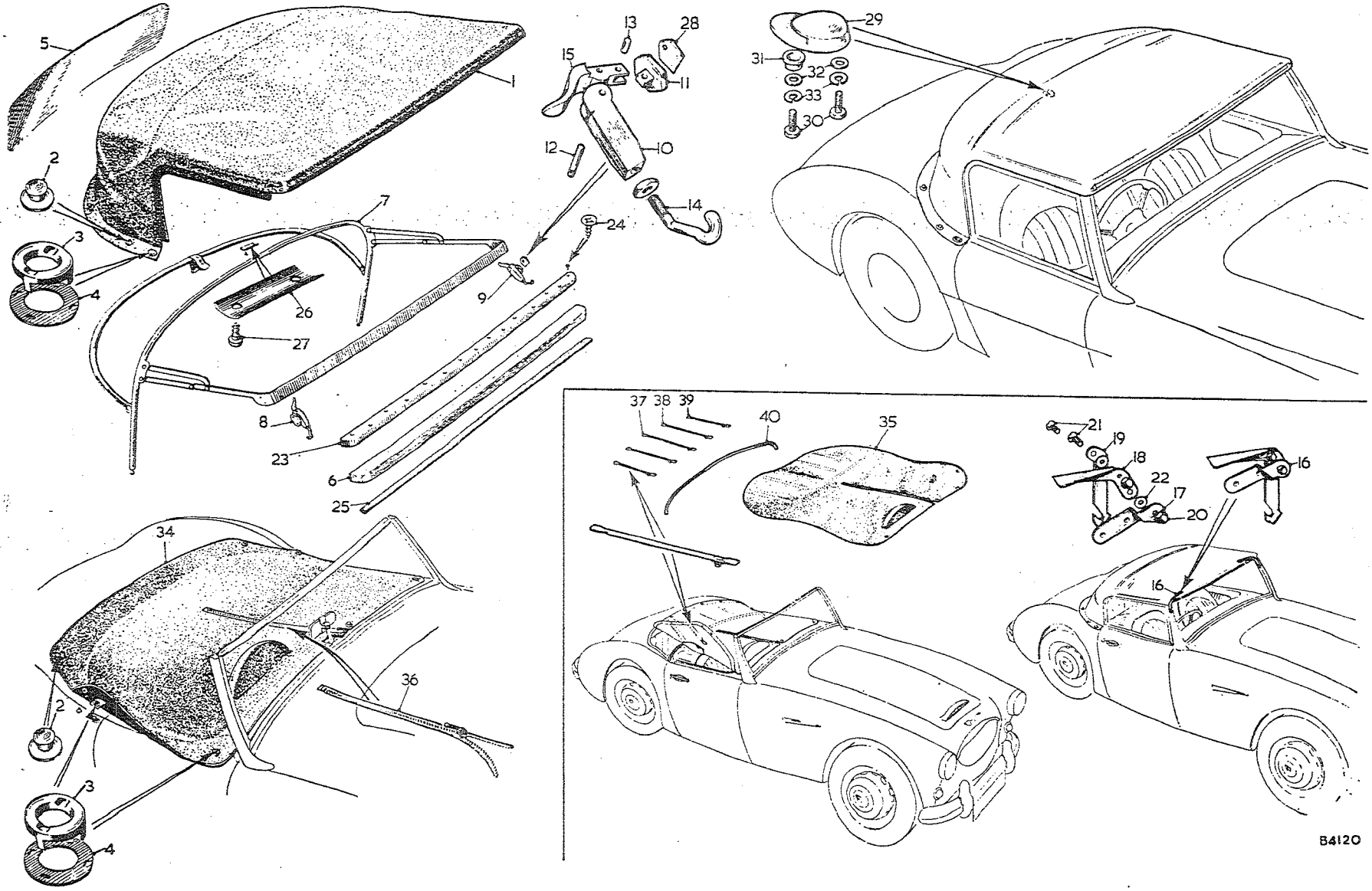

To face page R.35

Item No.	DESCRIPTION		Commencing (C) 101 Part Number	Commencing (C) 101 Illus. No.	Quantity	MODIFICATIONS New Part Number	MODIFICATIONS Change Point	REMARKS
	HOOD AND TONNEAU COVER							
1	**Hood assembly—blue**	BN7	**4B4216**		1			
2	Hood assembly—black	BN7	AHB5598		1			
3	Hood assembly—grey	BN7	AHB5599		1			
4	**Hood assembly—blue**	BT7	**AHB8751**		1		Fin. (C) 1528	No longer available; use component parts
5	Hood assembly—black	BT7	AHB8752		1		Fin. (C) 1528	No longer available; use component parts
6	Hood assembly—grey	BT7	AHB8753		1		Fin. (C) 1528	No longer available; use component parts
7	**Cover assembly—hood—blue**	BN7	**14B1385**	1	1			
8	Cover assembly—hood—black	BN7	AHB5600		1			
9	Cover assembly—hood—grey	BN7	AHB5601		1			
10	**Cover assembly—hood—blue**	BT7	**14B8453**		1	**AHB8801**	Com. (C) 1529	
11	Cover assembly—hood—black	BT7	AHB8518		1	AHB8802	Com. (C) 1529	
12	Cover assembly—hood—grey	BT7	AHB8519		1	AHB8803	Com. (C) 1529	
13	Fastener—top portion	BN7	TFS106	2	4			Part No. change; was 14B2465
14	Fastener—top portion	BT7	TFS106		12			Part No. change; was 14B2465
15	Eyelet		8F2408	3	2	14A6537		8F2408 not available; use 14A6537
16	Washer—eyelet		8F2409	4	2	14A6538		8F2409 not available; use 14A6538
17	Backlight	BN7	24B1777	5	1			
18	Backlight	BT7	14B8464		1			
19	**Hoodstick and finisher assembly—blue**	BN7	**AHB5944**	6	1			
20	Hoodstick and finisher assembly—black	BN7	AHB5799		1			
21	Hoodstick and finisher assembly—grey	BN7	AHB5800		1			
22	**Hoodstick and finisher assembly—blue**	BT7	**AHB8834**		1			
23	Hoodstick and finisher assembly—black	BT7	AHB8835		1			
24	Hoodstick and finisher assembly—grey	BT7	AHB8836		1			
25	**Frame assembly**	BN7	**24B1588**	7	1			
26	Frame assembly	BT7	AHB8354		1	AHB8787	Com. (C) 1529	
27	**Clamp assembly—toggle—RH**		**24B1709**	8	1			
28	**Clamp assembly—toggle—LH**		**24B1710**	9	1			
29	Body		24B1712	10	2			
30	Base—fixing		24B1713	11	2			
31	Pin—large	BN7	24B1714	12	2			
32	Pin—small	BN7	24B1715	13	2			
33	Hook—RH	BN7	24B1716		1			
34	Hook—LH	BN7	24B1717	14	1			
35	Handle—toggle clamp	BN7	24B1711	15	2			

Item No.	DESCRIPTION		Commencing (C) 101 Part Number	Illus. No.	Quantity	MODIFICATIONS New Part Number	MODIFICATIONS Change Point	REMARKS
	Hood and Tonneau Cover—*continued*							
1	**Clamp assembly—toggle—RH**		**14B8842**	**16**	**1**			
2	**Clamp assembly—toggle—LH**		**14B8843**		**1**			
3	Pressing—hood fixing—RH		14B8844	17	1			
4	Pressing—hood fixing—LH		14B8845		1			
5	Grip—finger—RH		14B8846	18	1			
6	Grip—finger—LH	BT7	14B8847		1			
7	Lever—locking—RH		14B8848	19	1			
8	Lever—locking—LH		14B8849		1			
9	Nut—dome		14B8850	20	4			
10	Screw		CMP0408	21	4			
11	Washer—special		54K3177	22	4			
12	Rail—hoodstick retaining	BN7	24B789	23	1			
13	Rail—hoodstick retaining	BT7	14B8471		1			
14	Screw—rail		CWN804	24	15			
15	Rubber—hoodstick sealing		14B8472	25	1			
16	Clip—hood cover to frame		AHB5407	26	2			
17	Screw—clip		PTZ603	27	4			
18	Packer—toggle clamp assembly	BN7	AHB5943	28	2			
19	Packer—toggle clamp assembly	BT7	14B8852		2			
20	Retainer—hood cover		14B1730	29	2			
21	Screw—retainer		53K124	30	4			
22	Washer—cup—screw	BN7	2K9798	31	2			
23	Washer—plain—screw		PWZ103	32	4			
24	Washer—spring—screw		LWZ203	33	4			

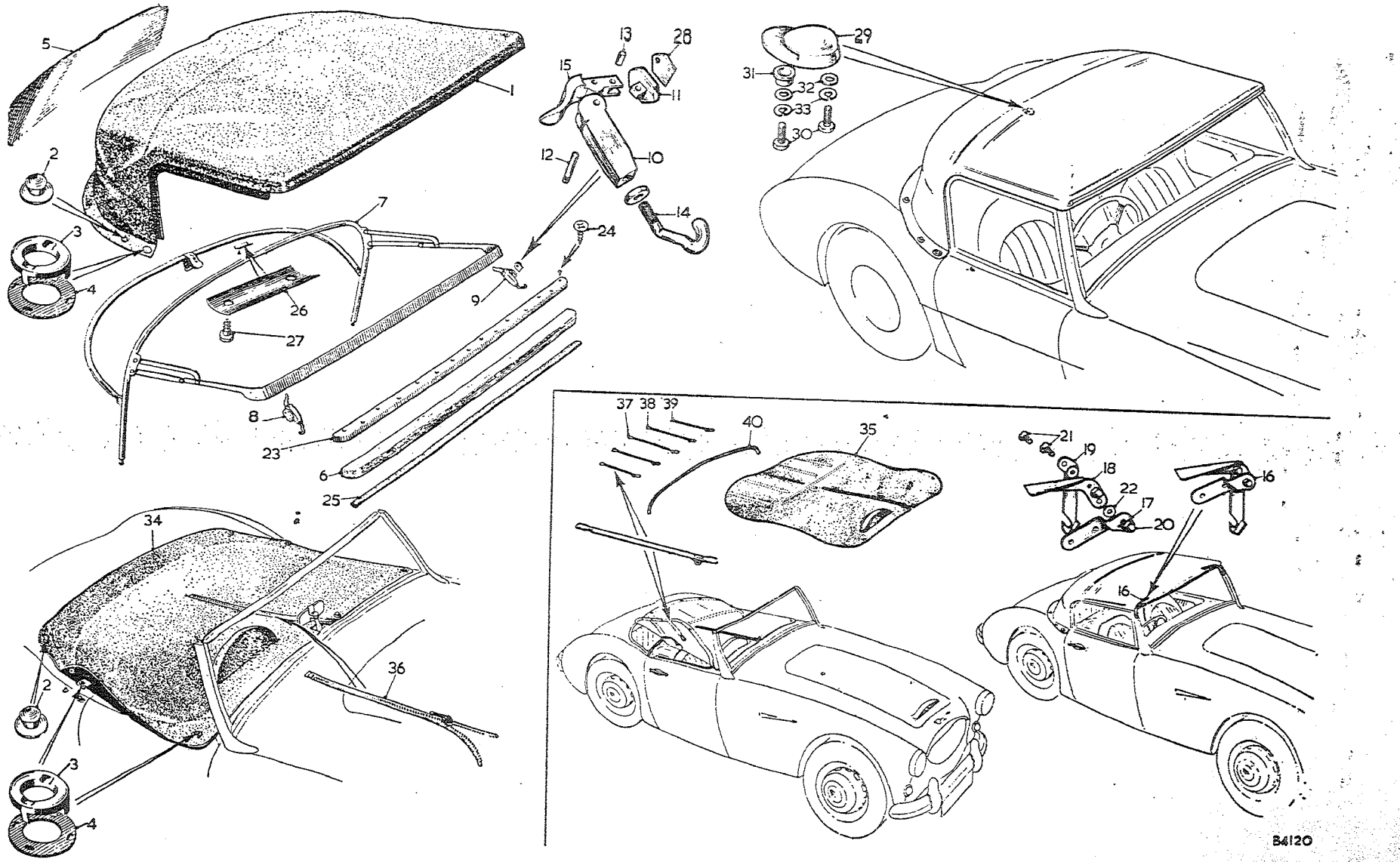

To face page R.36

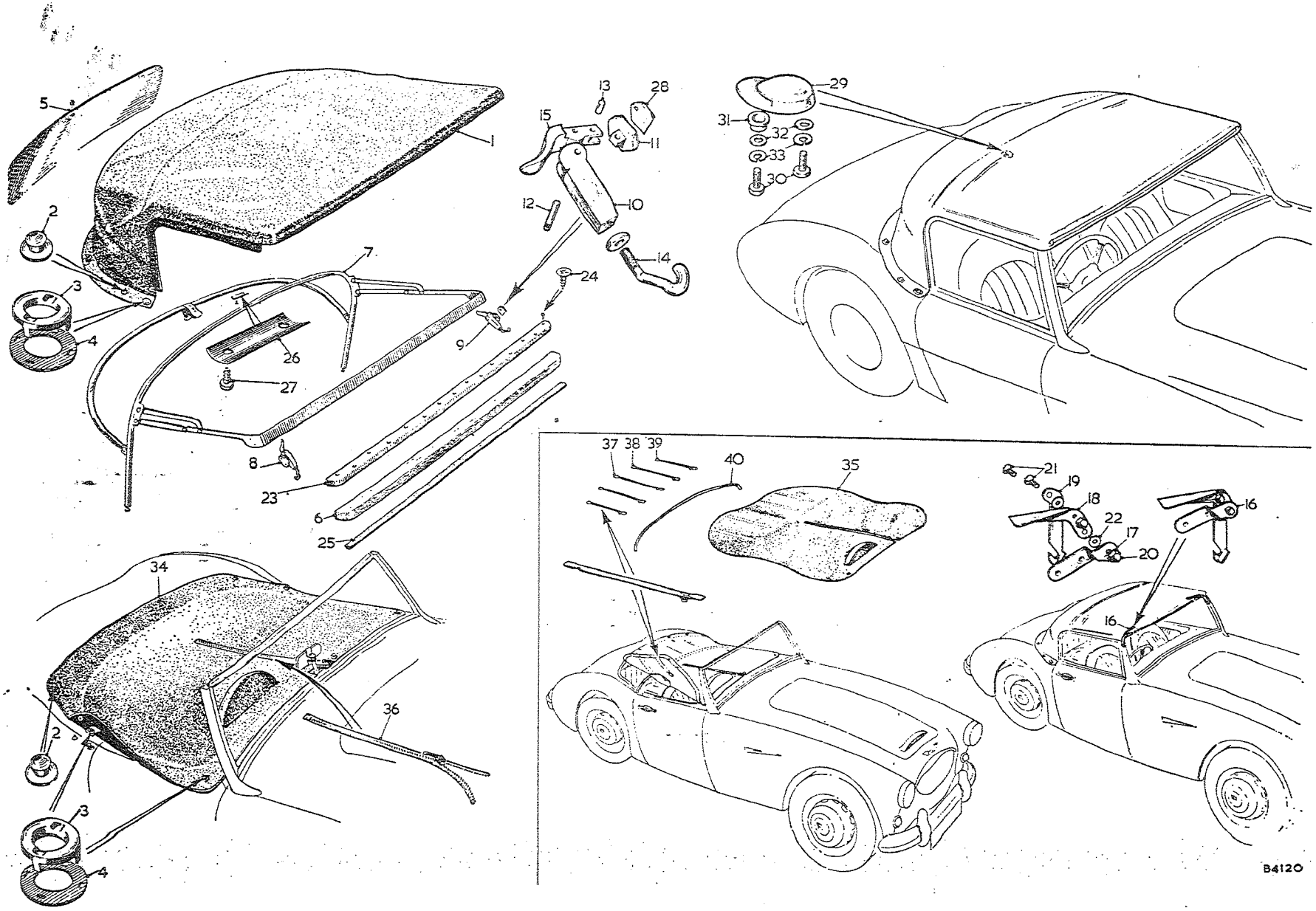

To face page R.37

Item No.	DESCRIPTION		Commencing (C) 101 Part Number	Illus. No.	Quantity	MODIFICATIONS New Part Number	MODIFICATIONS Change Point	REMARKS
	HARD TOP (Optional Extra)							
1	**Hard top—primed**		**27H9893**	1	1			
2	Hard top—Black	BN7	AHB5606		1			**Not available; use 27H9839**
3	Hard top—Ivory White	BN7	AHB5602		1			
4	Hard top—Colorado Red	BN7	AHB5603		1			
5	Hard top—Florida Green	BN7	AHB5604		1			
6	Hard top—Blue	BN7	AHB8749		1			
7	**Hard top—primed**	BT7	~~27H9892~~ USE		1	N. L. H.	P/A9	**Not available; use 27H9892**
8	Hard top—Black	BT7	AHB8514		1			
9	Hard top—Ivory White	BT7	AHB8515		1			
10	Hard top—Colorado Red	BT7	AHB8516		1			
11	Hard top—Florida Green	BT7	AHB8517		1			
12	Hard top—Blue	BT7	AHB8750		1			
13	Backlight	BN7	27H9772	2	1			
14	Backlight	BT7	27H9593		1			
15	Rubber—cant rail sealing		27H9598	3	2			
16	Catch—toggle—RH		24B1709	4	1			
17	Catch—toggle—LH		24B1710	5	1			
18	Bracket—corner—RH		27H9673	6	1			
19	Bracket—corner—LH		27H9674	7	1			
20	Nut—wing		27H9591	8	2			
21	Pad—quarter casing to hard top (rubber)		27H9592	9	4			
22	Hook—securing	BN7	27H9773	10	2			
23	Hook—securing	BT7	27H9590		2			
24	Plate—securing	BN7	27H9774	11	2			
25	Plate—securing	BT7	27H9589		2			
26	Pillar—support—RH		27H9587	12	1			
27	Pillar—support—LH		27H9588	13	1			
28	Channel—backlight glazing	BT7	27H9583		1			
29	Rubber—backlight glazing—bottom		27H9595	14	1			
30	Rubber—backlight glazing—top		27H9594	15	1			
31	Spigot—locating—RH		27H9894	16	1			
32	Spigot—locating—LH		27H9895		1			
33	Rubber—header rail sealing		27H9597	17	1			
34	Buffer (rubber)		27H9601	18	2			
35	Rubber—hardtop to body sealing	BN7	27H9776	19	2			
36	Rubber—hardtop to body sealing	BT7	27H9600		1			
37	Pad—cockpit rail sealing	BN7	27H9777	20	2			
38	Pad—cockpit rail sealing	BT7	27H9599		2			
39	Packing strip—cockpit rail—wide	BT7	27H9685		1			
40	Packing strip—cockpit rail—narrow	BT7	27H9686		1			

Item No.	DESCRIPTION			Commencing (C) 101 Part Number	Illus. No.	Quantity	MODIFICATIONS New Part Number	MODIFICATIONS Change Point	REMARKS
	Hood and Tonneau Cover—*continued*								
1	**Cover assembly—tonneau—blue**	BN7	RHD	**4B5133**	34	1			
2	Cover assembly—tonneau—black	BN7	RHD	AHB5594		1			
3	Cover assembly—tonneau—grey	BN7	RHD	AHB5595		1			
4	**Cover assembly—tonneau—blue**	BN7	LHD	**4B5134**		1			
5	Cover assembly—tonneau—black	BN7	LHD	AHB5596		1			
6	Cover assembly—tonneau—grey	BN7	LHD	AHB5597		1			
7	**Cover assembly—tonneau—blue**	BT7	RHD	**4B3228**	35	1			
8	Cover assembly—tonneau—black	BT7	RHD	AHB8622		1			
9	Cover assembly—tonneau—grey	BT7	RHD	AHB8623		1			
10	**Cover assembly—tonneau—blue**	BT7	LHD	**4B3229**		1			
11	Cover assembly—tonneau—black	BT7	LHD	AHB8701		1			
12	Cover assembly—tonneau—grey	BT7	LHD	AHB8702		1			
13	**Fastener—zip**			**14B8699**	36	1			
14	Eyelet	BN7		8F2408	3	4	14A6537		8F2408 not available; use 14A6537
15	Eyelet	BT7		8F2408		9	14A6537		
16	Washer—eyelet	BN7		8F2409	4	4	14A6538		8F2409 not available; use 14A6538
17	Washer—eyelet	BT7		8F2409		9	14A6538		
18	Fastener—top portion	BN7		TFS106	2	5			Part No. change; was 14B2465
19	Fastener—top portion			TFS106		13			Part No. change; was 14B2465
20	**Stiffener assembly—centre**	BT7		**4B8372**	37	1			
21	**Stiffener assembly—inner**	BT7		**4B8373**	38	2			
22	**Stiffener assembly—outer**	BT7		**4B8374**	39	2			
23	Turn button—single	BT7		14A6536		5			Part No. change; was 8F2480
24	Rivet—semi tubular	BT7		14B8841		10			
25	**Rail—tonneau cover support**			**AHB8395**	40	1			
26	Fastener—bottom portion—hood and tonneau cover	BN7		TFP1006		4			Part No. change; was 14B2464
27	Fastener—bottom portion—hood and tonneau cover	BT7		TFP1006		12			Part No. change; was 14B2464
28	Washer—joint fastener	BN7		2K4936		4			
29	Washer—joint—fastener	BT7		2K4936		12			
30	Washer—plain—fastener	BN7		PWZ103		4			
31	Washer—plain—fastener	BT7		PWZ103		12			
32	Washer—spring—fastener	BN7		LWZ203		4			
33	Washer—spring—fastener	BT7		LWZ203		12			
34	Nut—fastener	BN7		FNZ103		4			
35	Nut—fastener	BT7		FNZ103		12			
36	Turn button—single			14A6536		2			
37	Screw—turn button			RJZ603		4			Part No. change; was 8F2480

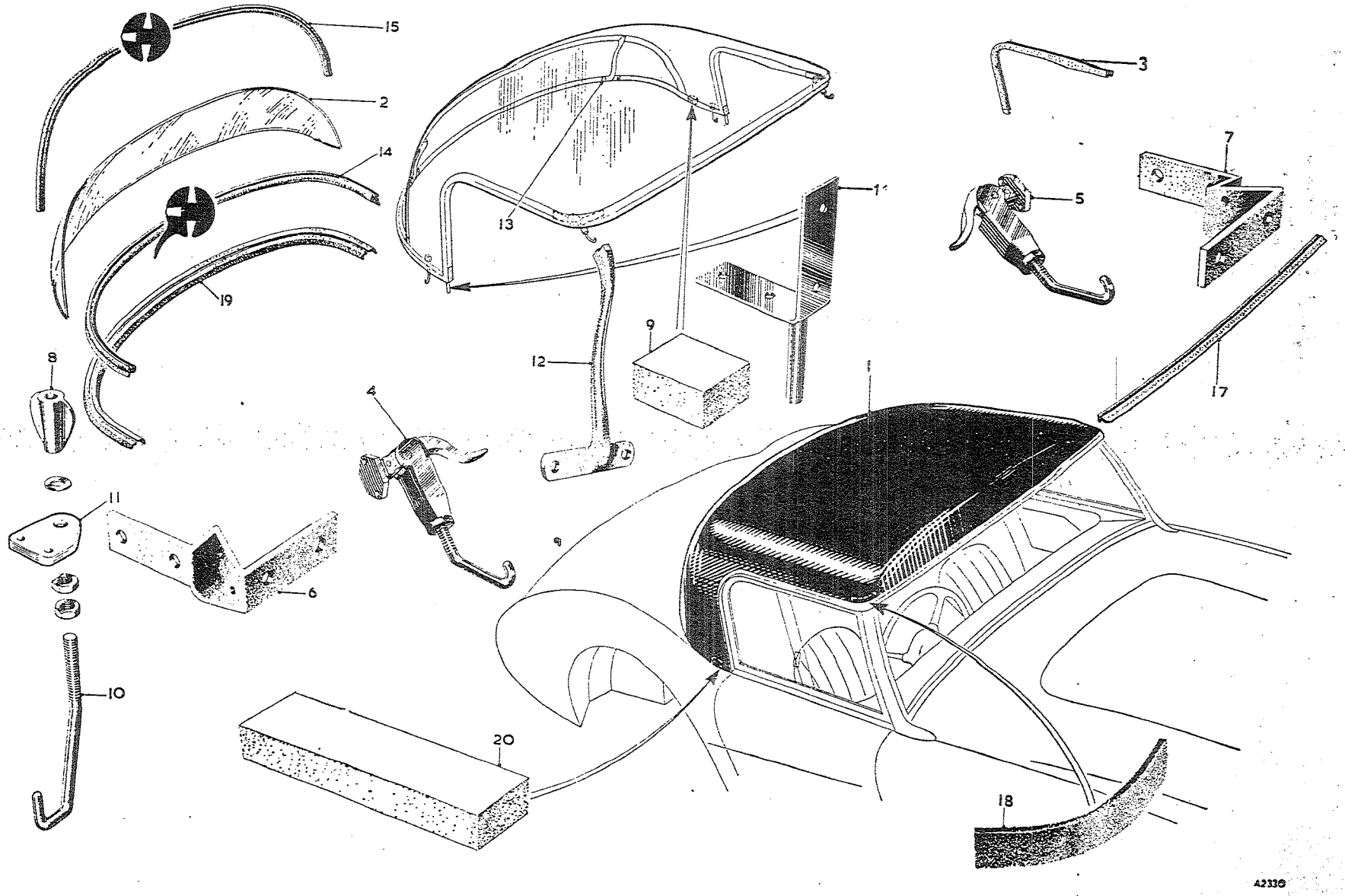

To face page R.38

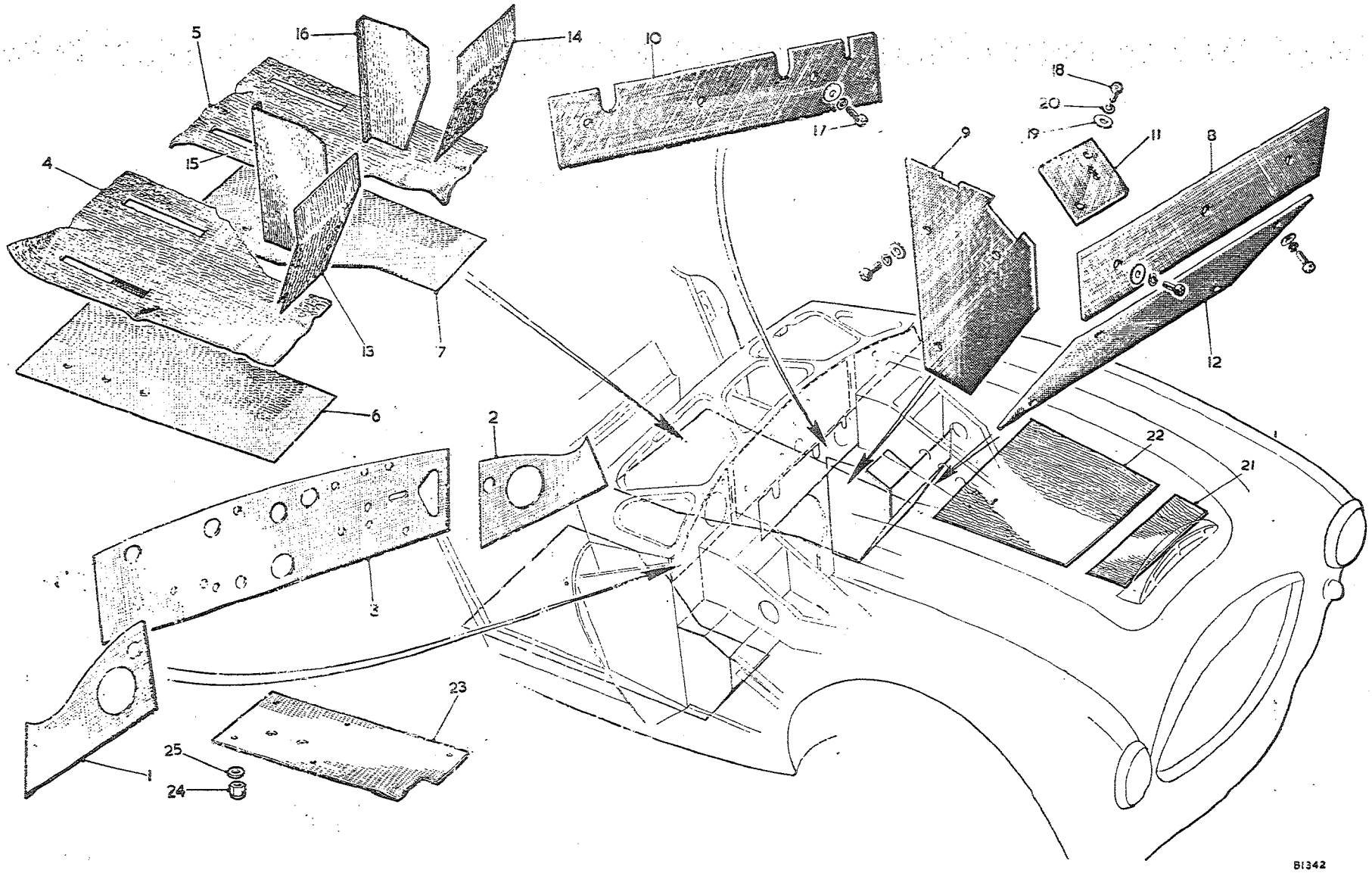

To face page R.39

Item No.	DESCRIPTION	Commencing (C) 101 Part Number	Illus. No.	Quantity	MODIFICATIONS New Part Number	MODIFICATIONS Change Point	REMARKS
	FELTS AND INSULATIONS						
1	Insulation—dash front—RH	14B7474	1	1			
2	Insulation—dash front—LH	14B7475	2	1			
3	Insulation—dash front—centre	14B7476	3	1			
4	Covering—floor—RH (felt) — BN7	24B1793	4	1	AHB9271		
5	Covering—floor—LH (felt) — BN7	24B1794	5	1	AHB9272	Com. (C) 16039	
6	Insulation—floor—RH — BN7	24B1791	6	1	AHB9275		
7	Insulation—floor—LH — BN7	24B1792	7	1	AHB9276		
8	Covering—floor—RH (felt) — BT7	24B499		1	AHB9269		24B499 and 14B7478 not available; use bulk underfelt AAA743
9	Covering—floor—LH (felt) — BT7	14B7478		1	AHB9270	Com. (C) 15881	
10	Insulation—floor—RH — BT7	24B498		1	AHB9273		
11	Insulation—floor—LH — BT7	14B7468		1	AHB9274		
12	Covering—pedal box—front—LH (asbestos)	14B6760	8	1			
13	Covering—pedal box—side—LH (asbestos)	14B6761	9	1			
14	Covering—dash front panel (asbestos)	14B7804	10	1	AHB9210	Com. (C) 13751 Fin. (C) 13750	
15	Covering—pedal box—front—RH (asbestos)	14B6759	11	1			
16	Covering—pedal box—front—LH lower (asbestos)	14B6828	12	1			
17	Covering—pedal box front panel—RH (felt)	14B7584	13	1	AHB9372	Com. (C) 16039 BN7, 15831 BT7	
18	Covering—pedal box front panel—LH (felt)	14B7585	14	1			
19	Covering—pedal box inner panel—RH (felt)	14B7586	15	1	AHB9373	Com. (C) 16039 BN7, 15881 BT7	
20	Covering—pedal box inner panel—LH (felt)	14B7587	16	1			
21	Screw—covering—$\frac{1}{2}$" (12·7 mm.)	PMZ0308	17	2		Fin. (C) 13750	
22	Screw—covering—$\frac{5}{8}$" (15·87 mm.)	PMZ0310	18	13/6			Quantity reduced at (C) 13751
23	Screw—covering—$\frac{7}{8}$" (22·22 mm.)			7	PMZ0314	Com. (C) 13751	
24	Washer—special—screw	53K3151	19	15/13			Quantity reduced at (C) 13751
25	Washer—spring—screw	LWZ203	20	15/13			
26	Insulator—bonnet—sound—front (felt) — Not UK		21	1	AHB8973	Com. (C) 13488	
27	Insulator—bonnet—sound—rear (felt) — Not UK		22	1	AHB8974		
28	Heatshield—silencer		23	1	AHB9065		
29	Locknut—heatshield to LH side floor panel		24	6	LNZ104	Com. (C) 13751	
30	Washer—plain—locknut		25	6	AJD7212		
	BULK MATERIAL—TRIM						
31	**Carpet—black**	**ADE539**		**A/R**			
32	Carpet—red	ADE565		A/R			
33	Carpet—blue	AHB8782		A/R			
34	Carpet—green	AHB8783		A/R			
35	**Leathercloth—red**	**5D8827**		**A/R**			
36	Leathercloth—blue	5D8828		A/R			
37	Leathercloth—black	5D8826		A/R			
38	Leathercloth—grey	5D8513		A/R			
39	Leathercloth—yellow	5D8627		A/R			
40	**Underfelt**	**AAA743**		**A/R**			Part No. change; was 87988
	COVERING - PEDAL BOX (FELT)						
	FRONT PANEL - R/H	14B7556		1/2			
	FRONT PANEL - L/H	14B7557		BULK			
	INNER PANEL - R/H	14B7558		A/R	AAA 743		PAU 2550 -
	INNER PANEL - L/H	14B7559					

SERVICE PARTS LIST

Item No.	DESCRIPTION	Commencing (C) 101 Part Number	Illus. No.	Quantity	MODIFICATIONS New Part Number	MODIFICATIONS Change Point	REMARKS
	FASCIA RHD	24B697	1	1			
	LHD	24B726		1			
1	**Panel—fascia**	PMP0312	2	4			
2	**Panel—fascia**	FNZ103	3	4			
3	Screw—panel to end fixing bracket	PWZ103	4	4			
4	Nut—screw	LWZ203	5	4			
5	Washer—plain—screw	PMP0310	6	1			
6	Washer—spring—screw	FNZ103	7	1			
7	Screw—panel to centre support bracket	PWP203	8	1			
8	Nut—screw	PWZ204	9	1			
9	Washer—plain—screw (chrome)	LWZ203	10	1			
10	Washer—plain—screw	14B7579	11	1			
11	Washer—spring—screw	PMP0308	12	1			
12	Bracket—panel support	FNZ103	13	1			
13	Screw—bracket to panel	PWZ103	14	1			
14	Nut—screw	LWZ203	15	1			
15	Washer—plain—screw	PMZ0308	16	2			
16	Washer—spring—screw	PWZ103	17	2			
17	Screw—bracket to body	LWZ203	18	2			
18	Washer—plain—screw	**14B6740**	19	1			
19	Washer—spring—screw	14G5854	20	8			
20	**Moulding—instrument panel**	**24B725**	21	1			] **Adjustable steering only**
21	Clip—moulding	**14B7305**	22	1			
22	**Escutcheon—steering column aperture**	52K2614	23	1			
23	**Escutcheon—steering column aperture**	AHB5406	24	1			
24	Screw—escutcheon retaining	**14B1729**	25	1			
25	Plate—escutcheon retaining	14B5776	26	1			
26	**Handle—grab**	**14B5775**	27	1			
27	Strip—packing	FNZ104	28	2			
28	**Escutcheon for handle**	LWZ204	29	2			
29	Nut—handle, strip and escutcheon	PWZ104	30	2			
30	Washer—spring—nut	PWZ204	31	2			
31	Washer—small—plain—nut						
32	Washer—large—plain—nut						

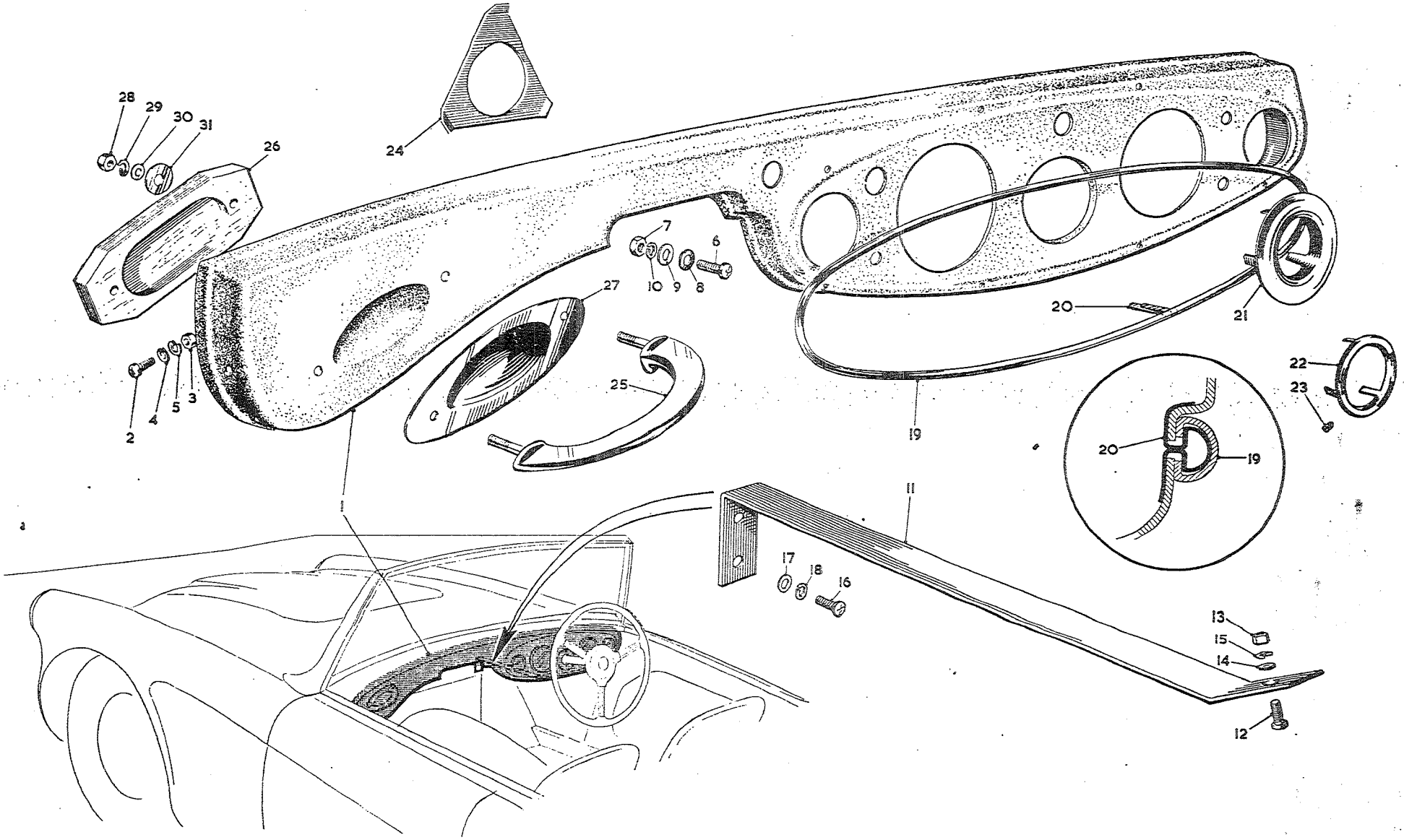

To face page R.40

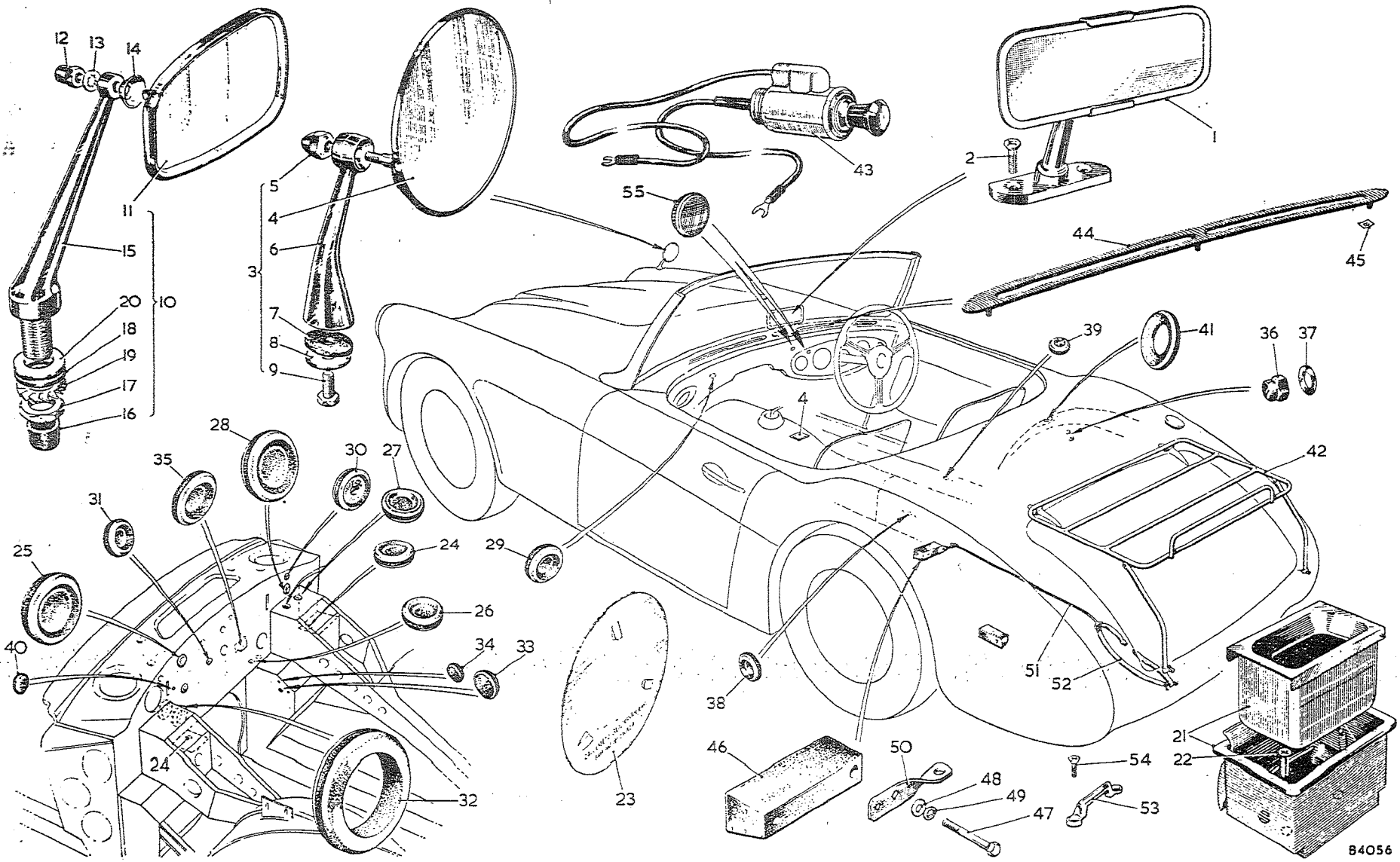

To face page R.41

Item No.	DESCRIPTION	Commencing (C) 101 Part Number	Illus. No.	Quantity	MODIFICATIONS New Part Number	MODIFICATIONS Change Point	REMARKS
	SUNDRIES						
1	Mirror—driving	14B1867	1	1			
2	Screw fixing mirror	RPP0312	2	2			
3	**Mirror—wing**	**BHA4066**	3	2	**14B5862**		**No longer available; use component parts**
4	**Head assembly**	**14A8196**	4	2			**Part No. change; was 37H9914**
5	Nut—dome	14A8226	5	2			Part No. change; was 37H9786
6	**Stem assembly**	**37H9915**	6	2			
7	Washer (rubber)	37H9917	7	2	14A8225		37H9917 not available; use 14A8225
8	Washer (steel)	PWZ205	8	2			Part No. change; was 37H9916
9	Bolt	HZS0506	9	2			Part No. change; was 37H9788
10	**Mirror—wing—boomerang type**	**27H9863**	10	2			Optional extra
11	**Head assembly**	**37H9947**	11	2			
12	Nut—dome	37H9967	12	2			
13	Washer—shakeproof	37H9968	13	2			
14	Collar	47H9510	14	2			
15	Spring	17H8148		2			
16	Glass	17H8146		2			
17	Ring—glass retaining (plastic)	17H8147		2			
18	**Arm assembly**	**37H9946**	15	2			
19	Ferrule (rubber)	37H9974	16	2			
20	Nut	37H9970	17	2			
21	Washer (rubber)	37H9971	18	2			
22	Washer (shakeproof)	37H9972	19	2			
23	Washer—plain	37H9973	20	2			
24	Ash tray	14B2016	21	1			
25	Screw fixing ash tray	CMZ0208	22	2			
26	Holder—licence	14A3823	23	1			
27	Plug—blanking dipper switch harness holes	4G2541	24	2			
28	Plug in dash front panel	4G3575	25	1			
29	Plug—blanking steering column bracket holes	4G6492	26	2			
30	Plug—blanking pendant pedal bracket holes	4G6492	27	2			
31	Plug—blanking oil gauge pipe hole	4G2541	28	1			

Item	DESCRIPTION	Commencing (C) 101 Part Number	Illus. No.	Quantity	MODIFICATIONS New Part Number	MODIFICATIONS Change Point	REMARKS
	Sundries—continued						
1	Plug—blanking hole in cold air duct panel	4G6492	29	1			
2	Grommet fitted in dash for air control cable	RFN403	30	1			
3	Plug—blanking choke control in dash		31	1	RFR210	Com. (C) 2194, except 2446, 2457 Fin. (C) 5233 BN7, 5309 BT7	
4	Grommet fitted in dash for steering column	3H2506	32	2			
5	Plug—blanking accelerator hole in LH pedal box—$\frac{1}{2}$" (12·7 mm.) dia.	RFR208	33	1			
6	Plug—blanking accelerator holes in LH pedal box—$\frac{1}{4}$" (6·35 mm.) dia.	RFN204	34	2			
7	Plug—blanking throttle relay shaft bearing hole in dash panel		35	1	RFR216		
8	Nut—dome—for safety strap weld bolt in rear wheelarch		36	4	14B2685		
9	Washer—plain		37	4	PWZ105		
10	Plug—blanking safety strap hole in tunnel		38	2	RFR207		Use ADA2493 for this application
11	Plug—blanking safety strap hole in tunnel			2	ADA2493		
12	Plug—blanking safety strap hole in floor		39	4	RFR205		
13	Buffer—blanking hole in dash by RH bonnet hinge	2H8041	40	1			
14	Button—blanking ignition switch hole in dash **West Germany and Sweden**		55	1	BHA4416	Com. (C) 15163	Part No. change; was BHA4251. For use when steering lock is fitted
15	Button—blanking starter solenoid push switch hole in dash **West Germany and Sweden**		55	1	BHA4416		
16	Carrier—luggage	17H9932	42	1			
17	Lighter—cigar	AHH5759	43	1			
18	Mask assembly—demister	4B8521	44	2			
19	Push-on fix	PFS106	45	6			
20	Block assembly—spare wheel retaining **BT7**	4B3257	46	2			
21	Bolt—block fixing **BT7**	HBZ0422	47	4			
22	Washer—plain—bolt **BT7**	PWZ104	48	4			
23	Washer—spring—bolt **BT7**	LWZ204	49	4			
24	Bracket—spare wheel retaining rod **BT7**	14B6757	50	1			
25	Rod—spare wheel retaining **BT7**	14B6756	51	1			
26	Strap—spare wheel **BT7**	14B6771	52	1			
27	Staple—breeching **BT7**	2K9579	53	1			
28	Screw—staple fixing **BT7**	RMP0310	54	2			

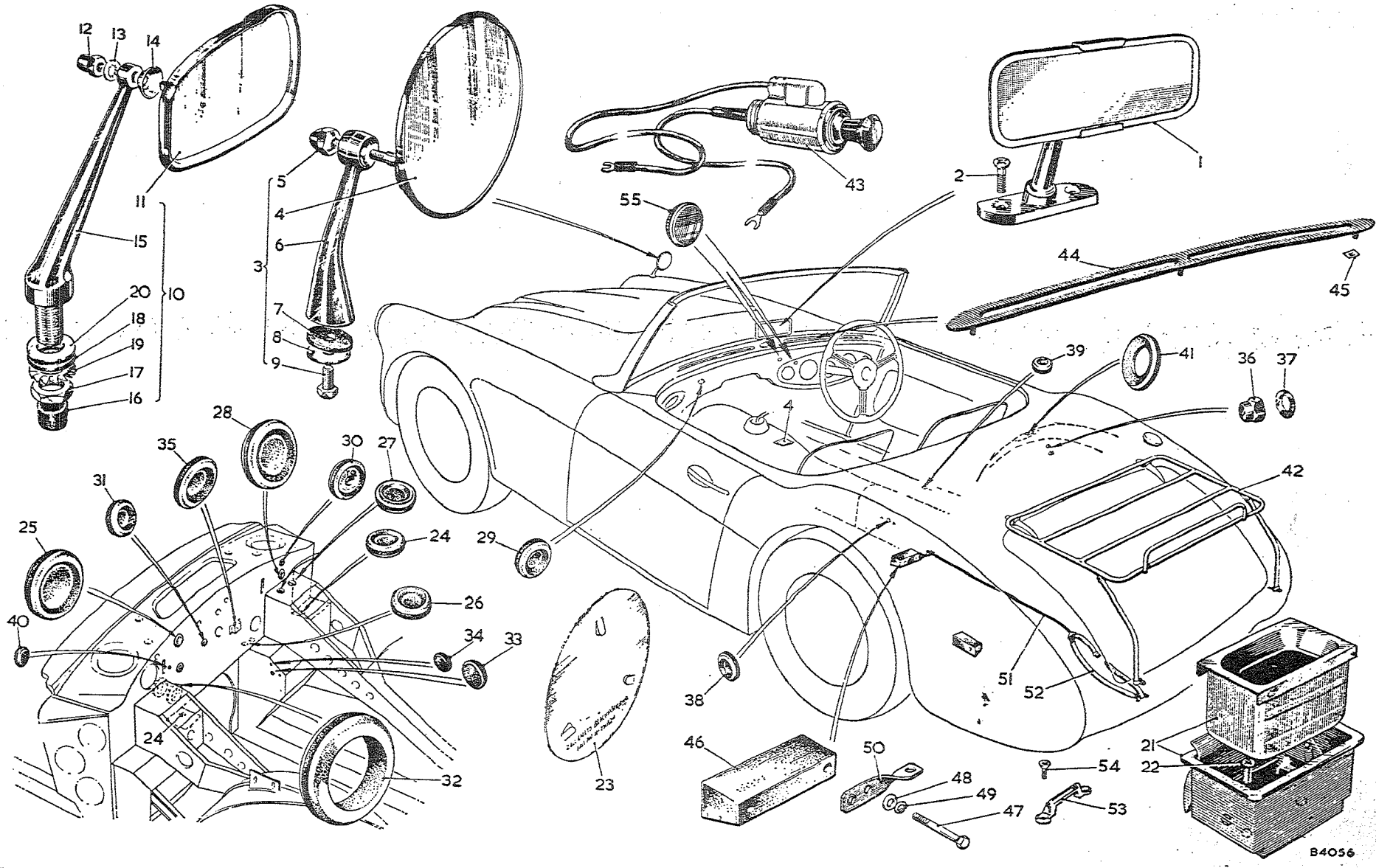

To face page R.42

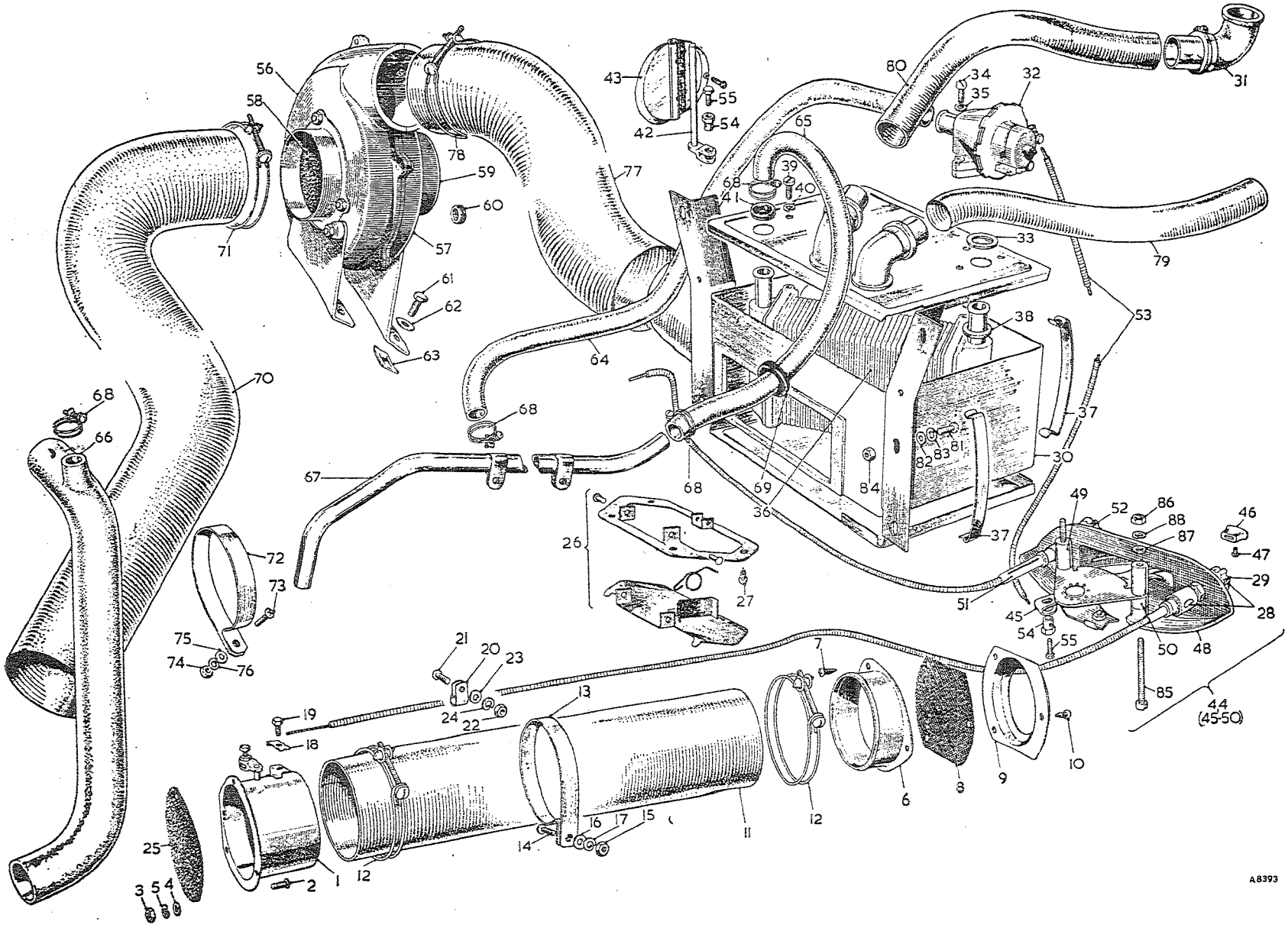

To face page R.43

Item No.	DESCRIPTION	Commencing (C) 101 Part Number	Illus. No.	Quantity	MODIFICATIONS New Part Number	MODIFICATIONS Change Point	REMARKS
	VENTILATING EQUIPMENT						
1	**Air intake assembly**	**14B7711**	1	1			
2	Screw—air intake assembly	PMZ0308	2	3			
3	Nut—screw	FNZ103	3	3			
4	Washer—plain—screw	PWZ103	4	3			
5	Washer—spring—screw	LWZ203	5	3			
6	**Flange—air intake**	**14B7712**	6	1			
7	Screw—flange	PTZ1003	7	3			
8	Gauze—cold air duct panel	14B8780	8	1			
9	Bezel—cold air duct panel	14B8781	9	1			
10	Screw—gauze and bezel to cold air duct panel	PTZ603	10	3			
11	**Hose—air**	**14B2749**	11	1			
12	Clip—hose	14G800	12	2	HCS168 HCS368		Not available; use HCS368
13	Clip—air hose to front wheelarch	14B1917	13	1	AHH5714		14B1917 not available; use AHH5714
14	Screw—clip	PMZ0310	14	1			
15	Nut—screw	FNZ103	15	1			
16	Washer—plain—nut	PWZ103	16	1			
17	Washer—spring—nut	LWZ203	17	1			
18	Clamp—cable	14G6451	18	1			
19	Screw—clamp	53K155	19	1			
20	Clip	PCR0307	20	1			
21	Screw—clip	CMZ0308	21	1			
22	Nut—screw	FNZ103	22	1			
23	Washer—plain—nut	PWZ103	23	1			
24	Washer—spring—nut	LWZ203	24	1			
25	Gauze—air valve	4G6575	25	1			
26	**Door assembly—outlet**	**13H59**	**26**	**2**			
27	Screw—door	PTZ603	27	8			
28	**Push-pull control—air intake** RHD	**14B7782**	**28**	**1**			
29	**Push-pull control—air intake** LHD	**14B7779**		1			
30	Knob	17H1493	29	1			
31	**Elbow assembly—demister**	**14G3499**	**31**	**2**			

Item No.	DESCRIPTION		Commencing (C) 101 Part Number	Illus. No.	Quantity	MODIFICATIONS New Part Number	MODIFICATIONS Change Point	REMARKS
	HEATER (Optional Extra)							
1	**Heater kit**	LHD	8G9181		1	USE NLA	(USE COMPONENT PARTS)	DAU 3575.
2	**Heater kit**	RHD	8G9048		1			
3	**Heater unit assembly**		14B6599	30	1			
4	Elbow assembly		14G3499		2			
5	Valve—water		27H1171	32	1			
6	Ring—valve seal		27H1248	33	1			Part No. change; was 27H614
7	Screw fixing valve		AJD3204Z	34	2			Part No. change; was 27H1172
8	Washer—spring—screw		27H611	35	4	LWZ303		27H611 not available; use LWZ303
9	Radiator and seals		27H1173	36	1			
10	Clip—spring		27H1174	37	3			
11	Ring—radiator seal		27H1248	38	1			Part No. change; was 27H614
12	Screw fixing radiator		27H1242	39	2	AJD1012		27H1242 not available; use AJD1012
13	Washer—spring—screw		27H611	40	2	LWZ303		27H611 not available; use LWZ303
14	Grommet		17H1591	41	1			
15	Arm and spindle		27H1176	42	1			
16	Valve assembly—air inlet		27H1177	43	1			
17	**Control assembly—lever**		14B6600	44	1			
18	Lever—control		13H78	45	1			
19	Knob—lever control		13H76	46	1			
20	Screw—knob		53K1302	47	1			
21	Panel—control lever		13H77	48	1			
22	Spacer—long		24B632	49	2			
23	Spacer—short		24B633	50	2			
24	**Push-pull assembly**	RHD	14B7780	51	1			
25	Knob	RHD	17H1494	52	1			
26	Cable—heater control	RHD	14B7776	53	1			
27	**Push-pull assembly**	LHD	14B7781		1			
28	Knob	LHD	17H1494		1			
29	Cable—heater control	LHD	14B7777		1			
30	Clamp—cable		14G6451		1			
31	Screw—clamp		53K155		1			
32	Trunnion cable		14B7810	54	3			
33	Screw—trunnion		53K155	55	3			
34	**Blower assembly**		14B6598	56	1			
35	Casing		17H819	57	1			
36	Mesh—intake		17H1597	58	1			

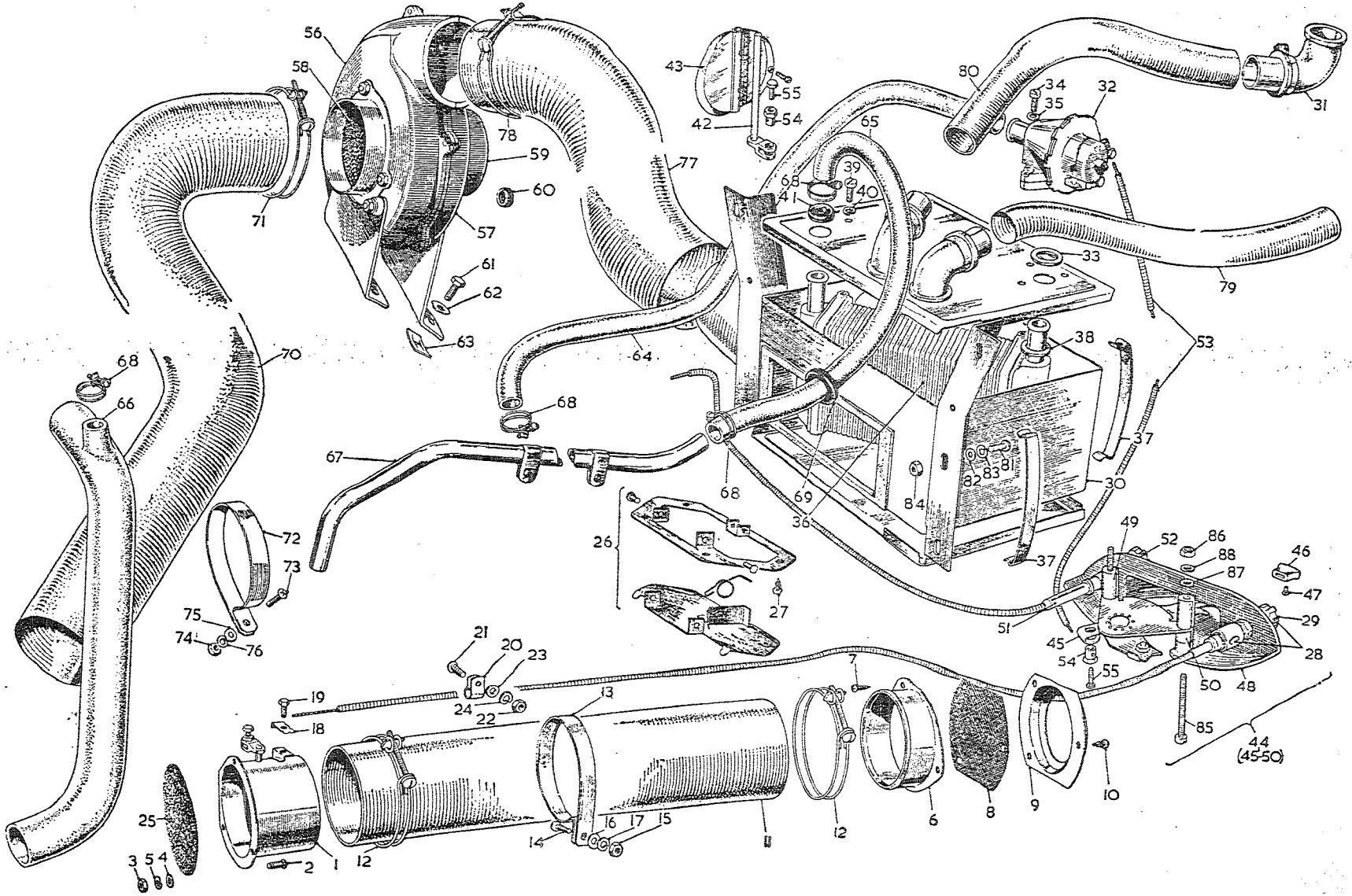
56
58
43
55
54
42
80
34
35
32
31
78
59
77
65
39
68
41
40
60
71
57
61
62
33
79
63
64
38
53
70
68
66
68
67
37
82
83
81
30
68
69
36
84
26
72
73
49
52
86
88
87
46
47
27
75
74
76
51
45
54
55
29
28
21
20
23
19
24
22
13
7
50
48
18
85
44
(45-50)
25
16
17
15
14
11
12
6
8
9
10
3
5
4
2
1
12
A8393

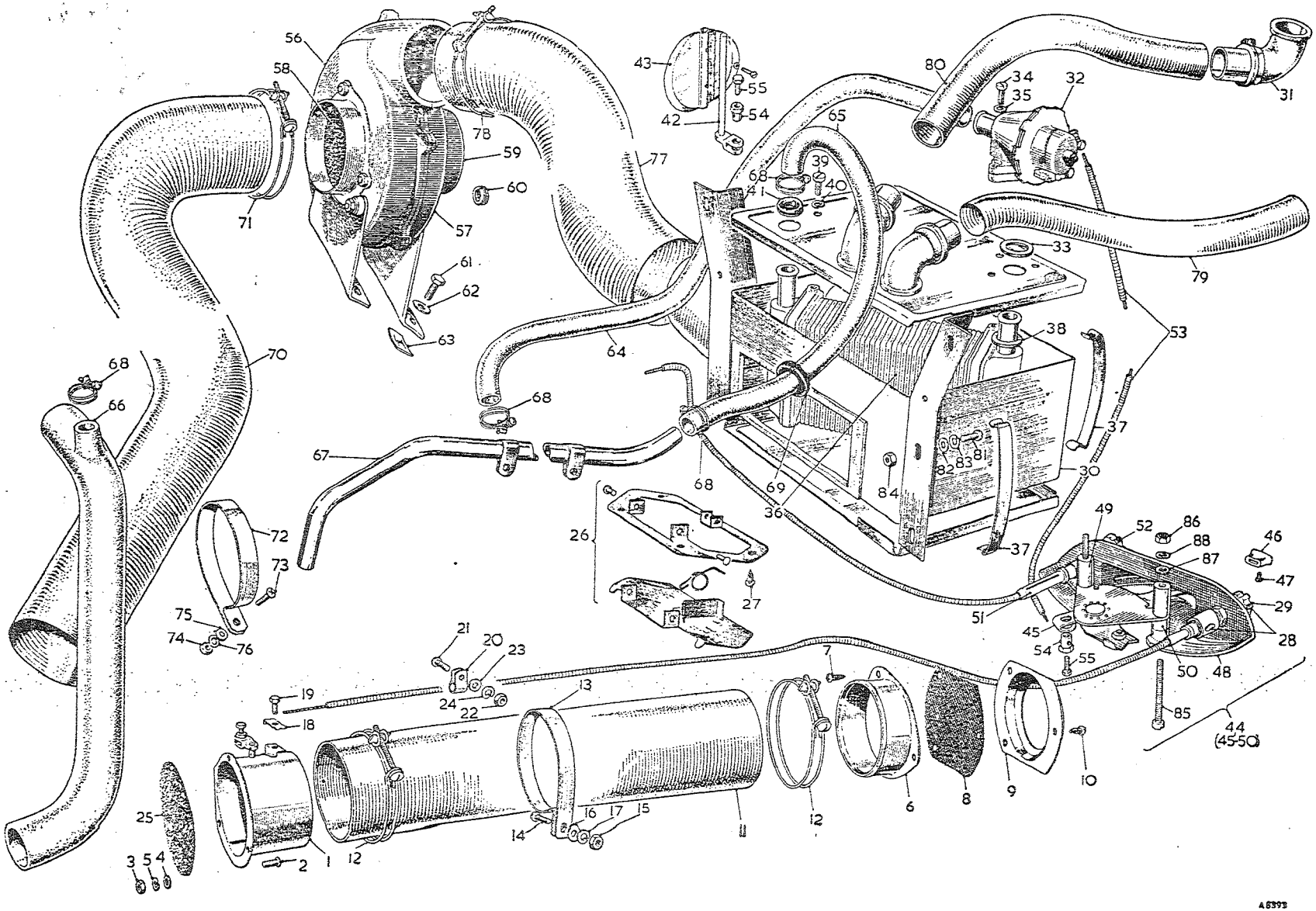

To face page R.45

Item No.	DESCRIPTION	Commencing (C) 101 Part Number	Illus. No.	Quantity	MODIFICATIONS New Part Number	MODIFICATIONS Change Point	REMARKS
	Heater—*continued*						
1	**Motor and runner assembly**	**27H1178**	59	1			**Not available; use 7H6836 with 17H1574**
2	Motor	7H6836		1			
3	**Runner (metal)**	**17H1574**		1			**Alternative to 17H8108**
4	Nut—collet	27H602		1			
5	**Runner (plastic)**	**17H8108**		1			**Alternative to 17H1574**
6	Ring—compression	17H6836		1			
7	Grommet	27H1232	60	4			
8	Bolt fixing blower assembly	ABZ0407	61	4			
9	Washer—special—bolt	6K9433	62	4			
10	Nut—spire—speed	6K9817	63	4			
11	Screw—earth—blower to wheel arch	PTZ1004		1			
12	Hose—feed—heater box to engine	1D1780	64	1			
13	Hose—return—heater box to engine	14B7550	65	1			
14	Connection—water—radiator to water pump	11B2117	66	1	AHB8971	Com. (C) 12049 BN7, 12063 BT7	11B2117 not available; use AHB8971
15	Pipe—water—heater to water connection	11B624	67	1	AHB9048	Com. (C) 13751	11B624 and AHB9048 not available; use AHB9249
					AHB9249	Com. (C) 17035 BN7, 17223 BT7	
16	Clip—hose	8G531	68	5	HCS0507		8G531 not available; use HCS0507
17	Grommet—hose through dash	14B9820	69	2			
18	Hose—cold air	14B9821	70	1			
19	Clip—hose	14G800	71	1	HCS168		Not available; use HCS368
20	Clip—hose			1	HCS368		
21	Clip—air hose to front wheel arch	AHH5714	72	1			
22	Screw fixing clip	PMZ0310	73	1			
23	Nut—screw	FNZ103	74	1			
24	Washer—plain—nut	PWZ103	75	1			
25	Washer—spring—nut	LWZ203	76	1			
26	Hose—heater—30″ × 3¼″ (76·2 × 8·25 cm.)	14B6601	77	1			
27	Clip—hose	14G5630	78	2			
28	Hose—heater to demister—11½″ × 1½″ (29·21 × 3·81 cm.)	14B6602	79	1			
29	Hose—heater to demister—13½″ × 1½″ (34·29 × 3·81 cm.)	14B6603	80	1			
30	Screw—heater to cold air duct panel	PMZ0308	81	6			
31	Washer—plain—screw	PWZ103	82	6			
32	Washer—spring—screw	LWZ203	83	6			
33	Nut	FNZ103	84	2			
34	Screw—control assembly to fascia panel	PMZ0328	85	2			
35	Nut—screw	FNZ103	86	2			
36	Washer—plain—nut	PWZ103	87	2			
37	Washer—spring—nut	LWZ203	88	2			

Item No.	DESCRIPTION	Commencing (C) 101 Part Number	Commencing (C) 101 Illus. No.	Quantity	MODIFICATIONS New Part Number	MODIFICATIONS Change Point	REMARKS
	TOOL KIT						
1	Tool bag	2A5412		1	11H169 AHA5506 AHB8983	Fin. (C) 10610 BN7, 10564 BT7 Com. (C) 16011 BN7, 10564 BT7 Com. (C) 13726	2A5412 not available; use 11H169
2	Screwdriver	2H4614		1			
3	Tyre valve tool	2H1683		1		Fin. (C) 10160 BN7, 10564 BT7	
4	Ignition gauge and screwdriver	97H2724		1			
5	Spanner—box—sparking plug	1B8995		1			Part No. change; was 3H2648
6	Tommy bar—box spanner			1	ACA5216	Com. (C) 10611 BN7, 10565 BT7	
7	Gauge—sparking plug and tappet clearance	2A5419		1	97H2724	Fin. (C) 10610 BN7, 10564 BT7	2A5419 not available; use 97H2724
8	Extractor—front hub cap	1B4339		1			Wire wheels
9	Brace—wheel	1B8997		1			Disc wheels
10	Hammer—copper	11B5166 WSE		1	886329	(PAU2575)	Wire wheels
11	Gun—grease	13H50		1		Fin. (C) 10610 BN7, 10564 BT7	
12	Jack—lifting—less shaft and handle	2H2099		1	AHB8827	Com. (C) 2264 Fin. (C) 10610 BN7, 10564 BT7	2H2099 not available; use AHB8827
13	Shaft and handle	11B5196		1		Fin. (C) 10610 BN7, 10564 BT7	
14	Jack—lifting			1	AHH5986		
15	Tommy bar—lifting jack			1	AHH5987		
16	Lever—hub cap removal			1	ACA5432	Com. (C) 10611 BN7, 10565 BT7	Disc wheels] No longer available; use 11H1051
17	Lever—hub cap removal			1	11H1051		Disc wheels
18	Spanner—hub cap **W. Germany and Switzerland**	AHH5839		1	AAA6255	PAU2599	Wire wheels
19	Strap—jack to LH bumper spring bar			1	~~AAA2064~~	Com. (C) 11280 BN7, 11585 BT7	Part No. change; was 135198

Item No.	DESCRIPTION	Commencing (C) 101 Part Number	Commencing (C) 101 Illus. No.	Quantity	MODIFICATIONS New Part Number	MODIFICATIONS Change Point	REMARKS
	PAINT						
	Colour — **B.M.C. Code**						
1	Black — BK1						For part Nos., containers sizes, primers, undercoats and thinners, etc., refer to B.M.C. Service Paint Scheme Book
2	Healey Blue — BU2						
3	Florida Green — GN1						
4	Pacific Green — GN9						
5	Colorado Red — RD2						
6	Ivory White — WT3						
7	Primrose — YL3						
9	Aluminium — AL1						